No. 14-1520

| | |
|---|---|
| Title: | Stryker Corporation, et al., Petitioners<br>v.<br>Zimmer, Inc., et al. |
| Docketed: | June 24, 2015 |
| Lower Ct: | United States Court of Appeals for the Federal Circuit |
| Case Nos.: | (2013-1668) |
| Decision Date: | December 19, 2014 |
| Rehearing Denied: | March 23, 2015 |

**Questions Presented**

| --Date-- | ----Proceedings and Orders---------- |
|---|---|
| Jun 22 2015 | Petition for a writ of certiorari filed. (Response due July 24, 2015) |
| Jul 24 2015 | Brief of respondents Zimmer, Inc., and Zimmer Surgical, Inc. in opposition filed. |
| Jul 24 2015 | Brief amici curiae of Independent Inventor Groups filed. (Distributed) |
| Jul 24 2015 | Brief amicus curiae of Nokia Technologies OY, and Nokia USA Inc. filed. |
| Aug 6 2015 | Reply of petitioners Stryker Corporation, et al. filed. |
| Aug 12 2015 | DISTRIBUTED for Conference of September 28, 2015. |
| Oct 5 2015 | DISTRIBUTED for Conference of October 9, 2015. |
| Oct 13 2015 | DISTRIBUTED for Conference of October 16, 2015. |
| Oct 19 2015 | Petition GRANTED. The petition for a writ of certiorari in No. 14-1513 is granted limited to Question 1 presented by the petition. The cases are consolidated and a total of one hour is allotted for oral argument. |
| Nov 11 2015 | Consent to the filing of amicus curiae briefs, in support of either party or of neither party, received from counsel for the petitioners. |
| Nov 19 2015 | The time to file the joint appendix and petitioners' briefs on the merits is extended to and including December 9, 2015. VIDED |
| Nov 19 2015 | The time to file respondents' briefs on the merits is extended to and including January 13, 2016. VIDED |
| Dec 9 2015 | Brief of petitioners Stryker Corporation, et al. filed. |
| Dec 9 2015 | Joint appendix filed. (Statement of costs filed.) |
| Dec 9 2015 | Supplemental appendix filed. (Statement of costs filed.) |
| Dec 14 2015 | Brief amici curiae of Mentor Graphics Corp., et al. in support of neither party filed. VIDED. |
| Dec 15 2015 | Brief amici curiae of Public Knowledge, The Electronic Frontier Foundation, and Engine Advocacy in support of neither party filed. VIDED. |
| Dec 16 2015 | Brief amicus curiae of the United States filed. VIDED. |
| Dec 16 2015 | Brief amici curiae of Small Inventors filed. VIDED. |
| Dec 16 2015 | Brief amicus curiae of Intellectual Property Professors in support of neither party filed. VIDED. |

| | |
|---|---|
| Dec 16 2015 | Brief amici curiae of Nokia Technologies Oy and Nokia USA Inc. filed. VIDED. |
| Dec 16 2015 | Brief amicus curiae of Licensing Executives Society (U.S.A. and Canada), Inc. in support of neither party filed. VIDED. |
| Dec 16 2015 | Brief amicus curiae of Innovention Toys, LLC filed. VIDED. |
| Dec 16 2015 | Brief amicus curiae of Intellectual Property Owners Association in support of neither party filed. VIDED. |
| Dec 16 2015 | Brief amicus curiae of Askeladden LLC in support of neither party filed. VIDED. |
| Dec 16 2015 | Brief amicus curiae of American Intellectual Property Law Association in support of neither party filed. VIDED. |
| Dec 16 2015 | Brief amicus curiae of Ericsson Inc. in support of neither party filed. VIDED. |
| Dec 16 2015 | Brief amicus curiae of Professor Mossoff in support of neither party filed. VIDED. |
| Dec 23 2015 | SET FOR ARGUMENT ON Tuesday, February 23, 2016 |
| Jan 4 2016 | Record requested from U.S.C.A. Federal Circuit. |
| Jan 12 2016 | Record received from U.S.C.A. Federal Circuit is electronic and located on PACER with the exception of Joint Appendix Vols. 1-3. |
| Jan 13 2016 | Brief of respondents Zimmer, Inc. and Zimmer Surgical, Inc. filed. |
| Jan 15 2016 | CIRCULATED. |
| Jan 19 2016 | Motion of the Solicitor General for leave to participate in oral argument as amicus curiae and for divided argument filed. VIDED. |
| Jan 20 2016 | Joint motion for divided argument filed by respondents. VIDED. |
| Jan 20 2016 | Brief amicus curiae of BSA I The Software Alliance filed. VIDED. (Distributed) |
| Jan 20 2016 | Brief amici curiae of Intel Corp., et al. filed. VIDED. (Distributed) |
| Jan 20 2016 | Brief amicus curiae of Marvell Semiconductor, Inc. filed. VIDED. (Distributed) |
| Jan 20 2016 | Brief amicus curiae of Huawei Technologies Co., Ltd. filed. VIDED. (Distributed) |
| Jan 20 2016 | Brief amici curiae of Dell, et al. filed. VIDED. (Distributed) |
| Jan 20 2016 | Brief amici curiae of Certain Members of Congress filed. VIDED. (Distributed) |
| Jan 20 2016 | Brief amicus curiae of EMC Corporation filed. VIDED. (Distributed) |
| Jan 20 2016 | Brief amici curiae of Google Inc., et al. filed. VIDED. (Distributed) |
| Jan 20 2016 | Brief amici curiae of Internet Companies filed. VIDED. (Distributed) |
| Jan 25 2016 | Motion of the Solicitor General for leave to participate in oral argument as amicus curiae and for divided argument GRANTED. VIDED |
| Jan 25 2016 | Joint motion for divided argument filed by respondents DENIED. VIDED |
| Feb 12 2016 | Reply of petitioners Stryker Corporation, et al. filed. (Distributed) |
| Feb 23 2016 | Argued. For petitioners: Jeffrey B. Wall, Washington, D. C.; and Roman Martinez, Assistant to the Solicitor General, Department of Justice, Washington, D. C. (for United States, as amicus curiae.) For respondents: Carter G. Phillips, Washington, D. C. VIDED |
| Feb 23 2016 | Letter dated February 18, 2016, amending the Corporate Disclosure Statement, received from counsel for respondent Zimmer, Inc. on February 23, 2016. (Distributed) |

14-1520
No. 14-

Supreme Court, U.S.
FILED
JAN 22 2015

IN THE

# Supreme Court of the United States

STRYKER CORPORATION, STRYKER PUERTO RICO, LTD., AND STRYKER SALES CORPORATION,
*Petitioners*,

v.

ZIMMER, INC. AND ZIMMER SURGICAL, INC.,
*Respondents*.

**On Petition for a Writ of Certiorari to the United States Court of Appeals for the Federal Circuit**

## PETITION FOR A WRIT OF CERTIORARI

SHARON A. HWANG
*Counsel of Record*
DEBORAH A. LAUGHTON
STEPHANIE F. SAMZ
CAROLINE A. TEICHNER
McAndrews, Held & Malloy, Ltd.
500 West Madison Street, Suite 3400
Chicago, Illinois 60661
(312) 775-8000
shwang@mcandrews-ip.com

*Counsel for Petitioners*,
Stryker Corp., Stryker Puerto Rico, Ltd., and Stryker Sales Corp.

## QUESTIONS PRESENTED

The Patent Act provides that district courts "may increase . . damages up to three times the amount found or assessed." 35 U.S.C. § 284. Despite this permissive and discretionary language, the Federal Circuit requires, as a prerequisite to awarding enhanced damages under § 284, that a patentee prove by clear and convincing evidence that infringement was "willful," meaning both that (1) there was an objectively high likelihood that the infringer's actions constituted infringement, and (2) this likelihood was either known or so obvious that it should have been known to the accused infringer.

The questions presented are:

1. Has the Federal Circuit improperly abrogated the plain meaning of 35 U.S.C. § 284 by forbidding any award of enhanced damages unless there is a finding of willfulness under a rigid, two-part test, when this Court recently rejected an analogous framework imposed on 35 U.S.C. § 285, the statute providing for attorneys' fee awards in exceptional cases?

2. Does a district court have discretion under 35 U.S.C. § 284 to award enhanced damages where an infringer intentionally copied a direct competitor's patented invention, knew the invention was covered by multiple patents, and made no attempt to avoid infringing the patents on that invention?

## PARTIES TO THE PROCEEDINGS

The following were parties to the proceedings in the U.S. Court of Appeals for the Federal Circuit:

1. Stryker Corporation, Stryker Puerto Rico, Ltd., and Stryker Sales Corporation, petitioners on review, were plaintiffs-appellees below.

2. Zimmer, Inc. and Zimmer Surgical, Inc., respondents on review, were defendants-appellants below.

## RULE 29.6 DISCLOSURE STATEMENT

Petitioner Stryker Corporation has no parent corporation, and no publicly held company owns ten percent or more of its stock.

Petitioner Stryker Puerto Rico, Ltd. is an indirect wholly-owned subsidiary of Stryker Corporation, which is a publicly held company that owns ten percent or more of Stryker Puerto Rico, Ltd.'s stock.

Petitioner Stryker Sales Corporation is a wholly-owned subsidiary of Stryker Corporation, which is a publicly held company that owns ten percent or more of Stryker Sales Corporation's stock.

## TABLE OF CONTENTS

QUESTIONS PRESENTED ..... i

PARTIES TO THE PROCEEDINGS ..... ii

RULE 29.6 DISCLOSURE STATEMENT ..... iii

TABLE OF CONTENTS ..... iv

TABLE OF APPENDICES ..... vii

TABLE OF AUTHORITIES ..... viii

OPINIONS BELOW ..... 1

JURISDICTION ..... 1

STATUTE INVOLVED ..... 2

STATEMENT OF THE CASE ..... 2

FACTS AND PROCEEDINGS BELOW ..... 4

STATUTORY FRAMEWORK ..... 10

A. The Grafting Of Willfulness Onto 35 U.S.C. § 284 ..... 10

B. The Parallel Prejudgment Interest and Exceptional Case Jurisprudence ..... 15

REASONS FOR GRANTING THE PETITION ..... 19

I. WILLFULNESS SHOULD NOT BE A PREREQUISITE FOR ENHANCED DAMAGES ..... 20

A. The Federal Circuit's Enhancement Regime Is Unsupportable Given The Plain Language Of § 284 ..... 20

B. The Federal Circuit's Grafting of a Willfulness Requirement Onto § 284 Is Flatly Inconsistent With Parallel Supreme Court Cases ..... 22

C. The Judges Of The Federal Circuit Disagree About The Propriety of Grafting Willfulness Onto § 284 ..... 24

II. THE *SEAGATE* FRAMEWORK FOR WILLFULNESS CANNOT STAND ..... 26

A. *Seagate* Undermines The Deterrent Power Of Enhanced Damages ..... 26

B. *Seagate* Has Created An Artificial And Unmanageable "Evidentiary Wall" ..... 28

C. *Seagate* Improperly Strips District Courts Of Discretion ..... 32

D. Willfulness Should Be Reviewed With Deference To The Factfinder ..... 34

III. THIS CASE SQUARELY PRESENTS AN IMPORTANT ISSUE OF LAW ON WHICH THE SUPREME COURT'S GUIDANCE IS NEEDED ..... 37

CONCLUSION ..... 39

## TABLE OF APPENDICES

APPENDIX A — DENIAL OF REHEARING IN THE UNITED STATES COURT OF APPEALS FOR THE FEDERAL CIRCUIT, DATED MARCH 23, 2015 ..... 1a

APPENDIX B — OPINION OF THE UNITED STATES COURT OF APPEALS FOR THE FEDERAL CIRCUIT, FILED MARCH 23, 2015 ..... 3a

APPENDIX C — OPINION OF THE UNITED STATES COURT OF APPEALS FOR THE FEDERAL CIRCUIT, FILED DECEMBER 19, 2014 ..... 26a

APPENDIX D — ORDER OF THE UNITED STATES DISTRICT COURT, WESTERN DISTRICT OF MICHIGAN, SOUTHERN DIVISION, FILED AUGUST 7, 2013 ..... 49a

APPENDIX E — ORDER OF THE UNITED STATES DISTRICT COURT, WESTERN DISTRICT OF MICHIGAN, SOUTHERN DIVISION, FILED NOVEMBER 29, 2012 ..... 123a

APPENDIX F — MEMORANDUM OPINION AND ORDER OF THE UNITED STATES DISTRICT COURT FOR THE WESTERN DISTRICT OF MICHIGAN, SOUTHERN DIVISION, FILED FEBRUARY 1, 2012 ..... 135a

## TABLE OF AUTHORITIES

### Cases

*Amsted Industries Inc. v. Buckeye Steel Castings Co.*,
24 F.3d 178 (Fed. Cir. 1994) ..... 11

*Bard Peripheral Vascular, Inc. v. W.L. Gore & Associates, Inc.*,
682 F.3d 1003 (Fed. Cir. 2012) ..... 15, 21, 35

*Bard Peripheral Vascular, Inc. v. W.L. Gore & Associates, Inc.*,
No. 2014-1114 (Fed. Cir. Apr. 8, 2015) ..... 36

*Bilski v. Kappos*,
561 U.S. 593 (2010) ..... 38

*Brooks Furniture Manufacturing, Inc. v. Dutailier International, Inc.*,
393 F.3d 1378 (Fed. Cir. 2005) ..... 16, 17, 18

*Commil USA, LLC v. Cisco Systems, Inc.*,
135 S. Ct. 1920 (2015) ..... 14

*DePuy Spine, Inc. v. Medtronic Sofamor Danek, Inc.*,
567 F.3d 1314 (Fed. Cir. 2009) ..... 35

*General Motors Corp. v. Devex Corp.*,
461 U.S. 648 (1983) ..... 16, 22, 23

*Global Traffic Technologies LLC v. Morgan*,
Nos. 2014-1537, 2014-1566, 2015 WL 3513416
(Fed. Cir. June 4, 2015) ..... 14, 21, 29, 31

*Halo Electronics, Inc. v. Pulse Electronics, Inc.*,
769 F.3d 1371 (Fed. Cir. 2014) ..... 14, 31, 36

*Halo Electronics, Inc. v. Pulse Electronics, Inc.*,
780 F.3d 1357 (Fed. Cir. 2015) ..... 18, 25, 29, 36

*Highmark Inc. v. Allcare Health Management System, Inc.*,
134 S. Ct. 1744 (2014) ..... 17, 18, 35

*Highmark, Inc. v. Allcare Health Management Systems, Inc.*,
687 F.3d 1300 (Fed. Cir. 2012) ..... 17, 36

*Highmark, Inc. v. Allcare Health Management Systems, Inc.*,
701 F.3d 1351 (Fed. Cir. 2012) ..... 36

*i4i Ltd. Partnership v. Microsoft Corp.*,
598 F.3d 831 (Fed. Cir. 2010) ..... 15, 31

*iLOR, LLC v. Google, Inc.*,
631 F.3d 1372 (Fed. Cir. 2011) ..... 17

*In re Seagate Technology, LLC*,
497 F.3d 1360 (Fed. Cir. 2007) (*en banc*) .....passim

*Innovention Toys, LLC v. MGA Entertainment, Inc.*,
No. 2014-1731, 2015 WL 1917997 (Fed. Cir. Apr.
29, 2015) ..... 27

*Johns Hopkins University v. CellPro, Inc.*,
152 F.3d 1342 (Fed. Cir. 1998) ..... 11

*King Instruments Corp. v. Perego*,
65 F.3d 941 (Fed. Cir. 1995) ..... 11, 12

*Knorr-Bremse Systeme Fuer Nutzfahrzeuge GmbH v. Dana Corp.*,
383 F.3d 1337 (Fed. Cir. 2004) (*en banc*) ..... 12, 32

*KSR International Co. v. Teleflex Inc.*,
550 U.S. 398 (2007) ..... 38

*Lee v. Mike's Novelties, Inc.*,
543 F. App'x 1010 (Fed. Cir. 2013) ..... 35

*nCube Corp. v. SeaChange International, Inc.*,
436 F.3d 1317 (Fed. Cir. 2006) ..... 12

*Octane Fitness, LLC v. ICON Health & Fitness, Inc.*,
134 S. Ct. 1749 (2014) .....passim

*Powell v. Home Depot U.S.A., Inc.*,
663 F.3d 1221 (Fed. Cir. 2011) ..... 15, 29

*Read Corp. v. Portec, Inc.*,
970 F.2d 816 (Fed. Cir. 1992) ..... 12, 33, 34

*Safeco Insurance Co. of America v. Burr*,
551 U.S. 47 (2007) ..... 31

*Sherman Industries, Inc. v. Proto-Vest, Inc.*,
732 F.2d 168 (Fed. Cir. 1984) ..... 12

*Spine Solutions, Inc. v. Medtronic Sofamor Danek USA, Inc.*,
620 F.3d 1305 (Fed. Cir. 2010) ..... 14, 27

*SRI International, Inc. v. Advanced Technology Laboratories, Inc.*,
127 F.3d 1462 (Fed. Cir. 1997) ..... 11, 12

*Teva Pharmaceuticals USA, Inc. v. Sandoz, Inc.*,
135 S. Ct. 831 (2015) ..... 38

*Uniloc USA, Inc. v. Microsoft Corp.*,
632 F.3d 1292 (Fed. Cir. 2011) ..... 14

*Yarway Corp. v. Eur-Control USA, Inc.*,
775 F.2d 268 (Fed. Cir. 1985) ..... 11

**Statutes**

28 U.S.C. § 1254 ..... 1

35 U.S.C. § 271 ..... 14

35 U.S.C. § 282 ..... 14, 27

35 U.S.C. § 284 ..... passim

35 U.S.C. § 285 ..... passim

Patent Act of 1793, Ch. 11, § 5 ..... 10

Patent Act of 1800, Ch. 25, § 3 ..... 10

Patent Act of 1836, Ch. 357, § 14 ..... 10

Patent Act of 1870, Ch. 230, § 59 ..... 11

**Other Authorities**

S. 23, 112th Cong. (Jan. 25, 2011) ..... 21

S. Rep. No. 111-18 (2009) ..... 21

Stryker Corporation, Stryker Puerto Rico, Ltd., and Stryker Sales Corporation (collectively, "Stryker") respectfully petition for a writ of *certiorari* to review the judgment of the United States Court of Appeals for the Federal Circuit.

## OPINIONS BELOW

The Federal Circuit's opinion (App. 26a-48a) is reported at 774 F.3d 1349 and its revised opinion (App. 3a-25a) is reported at 782 F.3d 649. The Federal Circuit's order denying rehearing *en banc* (App. 1a-2a) is reported at 596 F. App'x 924. The opinion of the District Court denying Respondent's motions for judgment as a matter of law and granting Petitioner's motions for enhanced damages and attorneys' fees (App. 49a-122a) is available at 2013 WL 6231533. The opinion of the District Court granting Petitioner's motion for summary judgment of infringement (App. 123a-134a) is unreported. The opinion of the District Court construing patent claim terms (App. 135a-173a) is available at 2012 WL 333814.

## JURISDICTION

The Federal Circuit entered judgment on December 19, 2014, and denied rehearing *en banc* on March 23, 2015. App. 1a-2a, 26a-48a. This Court has jurisdiction pursuant to 28 U.S.C. § 1254(1).

## STATUTE INVOLVED

Section 284 of the Patent Act, 35 U.S.C. § 284, provides in pertinent part as follows:

> Upon finding for the claimant the court shall award the claimant damages adequate to compensate for the infringement, but in no event less than a reasonable royalty for the use made of the invention by the infringer, together with interest and costs as fixed by the court.
>
> When the damages are not found by a jury, the court shall assess them. In either event the court may increase the damages up to three times the amount found or assessed. Increased damages under this paragraph shall not apply to provisional rights under section 154(d).

## STATEMENT OF THE CASE

This case raises important questions of law that implicate the key aims of the patent system: promoting and protecting innovation while deterring wholesale copying of patented inventions.

The Patent Act provides, in simple and discretionary terms, that district courts "may increase . damages up to three times the amount found or assessed." 35 U.S.C. § 284. But the Federal

Circuit has effectively stripped district courts of the discretion to enhance patent damage awards for prevailing patentees by imposing a rigid willfulness framework on top of this otherwise flexible statute.

The plain language of § 284 is silent as to willfulness. Nevertheless, before even considering the propriety of enhanced damages, the Federal Circuit requires patentees to prove, by clear and convincing evidence, that an infringer's defenses were objectively unreasonable, and if so, that the infringer acted in subjective bad faith. The Federal Circuit then conducts a *de novo* review of the objective reasonableness of an infringer's defenses, giving no deference to the district court's assessment of an infringer's positions. Just last term, this Court wholly rejected an analogous framework imposed by the Federal Circuit on the discretionary statute governing attorneys' fee awards in patent cases, 35 U.S.C. § 285.

The Federal Circuit's current willfulness framework undermines the intended deterrent effect of § 284 by immunizing infringers from enhanced damages so long as they present at least one plausible defense at the post-trial appellate stage. In other words, under the Federal Circuit's rule, an adjudged infringer can copy a direct competitor's pioneering invention in bad faith but escape punitive damages simply by engaging skilled counsel to advance an unsuccessful but ultimately credible defensive argument on appeal, regardless of whether the infringer relied on or even knew about that defense prior to engaging in its infringing acts.

In this case, the District Court and jury both found that Petitioner Stryker proved willfulness by clear and convincing evidence. As a result, and given the egregiousness of Respondent Zimmer's infringement, the District Court exercised its discretion under § 284 to treble Stryker's damage award. On appeal, however, the Federal Circuit reviewed objective willfulness *de novo*, reversed, and vacated Stryker's treble damages, despite affirming for Stryker on all liability issues. This case vividly illustrates the tension between the discretionary enhancement scheme envisioned by Congress and the impermissible barriers to enhancement erected by the Federal Circuit.

## FACTS AND PROCEEDINGS BELOW

This petition arises from a patent infringement lawsuit brought by an industry leader in the medical device field against its direct competitor. The patentee in this case asserted its patents not to extract licensing fees, but to protect its investment in innovation.

The District Court, which lived with this case for almost three years, summarized the facts as follows:

> [P]ulsed lavage devices had, for years, served an important function in surgical procedures—cleaning out wounds and removing necrotic tissue from wound sites. Early-model pulsed lavage

devices were bulky and required a centralized power source. They had to be wheeled around a hospital, from one room to another. Stryker solved the problems associated with the size and power needs of pulsed lavage devices by designing a portable, disposable, battery-powered, hand-held pulsed lavage device. Zimmer's Manufacturing Manager and Rule 30(b)(6) witness agreed that Stryker products were "pioneering."

Zimmer had no answer for Stryker's new technology and saw its market share fall precipitously, to the point where Zimmer's presence in the pulsed lavage marketplace was at risk. Rather than relying on their own engineers to develop an alternative, Zimmer hired an independent contractor with no experience in pulsed lavage devices. In essence, Zimmer handed the independent contractor a copy of Stryker's product and said, "Make one for us." Under those conditions, it is not surprising that the finished Zimmer product turned out to look and function like Stryker's product. Nevertheless, Zimmer got its product to market quickly and in direct competition with Stryker. In doing so, it did not seek advice of outside patent counsel to assess the potential for infringement of

> Stryker's patents, or to opine on the validity of Stryker's patents.
>
> Once Zimmer introduced its competing product, there was fierce, direct market competition between Stryker and Zimmer. Zimmer constantly sought to lure customers away from Stryker and had a fair amount of success in doing so with its new product. Then, in 2007, Zimmer was forced to pull its product from the market due to technical problems. Zimmer had received so many complaints about its product that it decided to cease production entirely and not re-start production until December 2008, when it reentered the market. Upon reentering the market, Zimmer recaptured most of the market share it had forfeited by its year-plus absence.

App. 50a-52a.

Stryker filed suit in December 2010, alleging infringement of three patents, U.S. Patent Nos. 6,022,329 ("the '329 patent"), 6,179,807 ("the '807 patent"), and 7,144,383 ("the '383 patent").

On November 29, 2012, the District Court granted Stryker's motion for summary judgment of infringement as to all twenty asserted claims of the '807 and '383 patents and as to all but one claim element of the '329 patent. App. 123a-134a.

Importantly, even after the District Court found infringement on summary judgment, Zimmer made no effort to stop infringing Stryker's patents or to mitigate damages. The case then proceeded to trial on a single infringement issue relating to the '329 patent, Zimmer's invalidity defenses for all three patents-in-suit, Stryker's claim for willful infringement, and damages.

The District Court summarized the jury verdict as follows:

> After two weeks of trial—featuring hundreds of exhibits and more than a dozen witnesses—and multiple days of deliberation, the jury returned a verdict unequivocally in Stryker's favor. In particular, the jury found: (1) that the Pulsavac Plus products infringed claim 2 of the 329 patent; (2) that Zimmer failed to establish any of its 22 invalidity contentions; and (3) that Stryker was entitled to $70 million in lost profits. The jury also found that Zimmer willfully infringed the valid claims under the patents-in-suit.

App. 50a (internal citations omitted).

The District Court denied all of Zimmer's post-trial motions. App. 49a-122a. With respect to Zimmer's motion for JMOL of no willfulness, the District Court expressly reviewed both prongs of the

Federal Circuit's willfulness test and found in Stryker's favor on both. App. 73a-79a.

The District Court further observed the following:

> Zimmer lost every argument it advanced at claim construction, then lost most of the disputed claims on summary judgment. It lost all of its remaining claims at trial. At the time the jury announced its verdict, Zimmer had not changed its product design. This is consistent with both the market and litigation strategy that Zimmer has followed for years. Zimmer chose a high-risk/high-reward strategy of competing immediately and aggressively in the pulsed lavage market and opted to worry about the potential legal consequences later. When Stryker sued, Zimmer's able counsel offered the most plausible defenses that were available to them given Zimmer's pre-litigation market conduct. *Ultimately, however, the trial proofs demonstrated that this was not a close case. The relative quality of the expert testimony on liability was notably favorable to Stryker.*

App. 52a-53a (emphasis added).

In analyzing Stryker's motion for enhanced damages, the District Court considered the totality of the circumstances, including Zimmer's admitted copying, its failure to investigate the scope of Stryker's patents, and the long duration of its infringement. App. 116a-120a. The District Court again noted that "this was not a close case," given that "[e]very major decision—from claim construction through post-verdict motions—went against Zimmer," among many other considerations. App. 118a. Accordingly, the District Court exercised its discretion to treble Stryker's damages award of $70 million. App. 119a. The District Court separately granted Stryker's motion for a finding of exceptional case under 35 U.S.C. § 285 and awarded Stryker its reasonable attorneys' fees. App. 108a-110a.

On appeal, Zimmer did not challenge subjective willfulness but touted the objective reasonableness of some of its noninfringement and invalidity defenses. The Federal Circuit affirmed the District Court's grant of summary judgment of infringement of the '807 and '383 patents, the jury's finding of infringement of the '329 patent, the jury's rejection of all 22 of Zimmer's invalidity defenses, and the jury's award of lost-profits damages. App. 8a-20a. However, the Federal Circuit reversed on willfulness, determining *de novo* that, although all of Zimmer's defenses were unsuccessful, Zimmer had presented a reasonable defense as to each of the three patents-in-suit. App. 21a-24a. Having reversed on willfulness, the Federal Circuit summarily vacated the District Court's treble damages award and vacated and remanded the

District Court's finding of exceptional case and award of attorneys' fees. App. 25a.

Stryker filed a petition for rehearing *en banc*, urging the Federal Circuit to reevaluate the appropriate standards for granting enhanced damages in light of this Court's *Octane Fitness* and *Highmark* decisions. The Federal Circuit denied the petition on March 23, 2015. App. 1a-2a.

## STATUTORY FRAMEWORK

### A. The Grafting Of Willfulness Onto 35 U.S.C. § 284

Treble damages have been a part of U.S. patent law since the Patent Act of February 21, 1793, which allowed a patentee to recover, in an action at law, "a sum, that shall be at least equal to three times the price, for which the patentee has usually sold or licensed to other persons, the use of [the invention] . ." Patent Act of 1793, Ch. 11, § 5. The Patent Act of 1800 also allowed a patentee to recover "a sum equal to three times the actual damages sustained by [the] patentee." Patent Act of 1800, Ch. 25, § 3. Under these provisions, treble damage awards were automatic.

Treble damages were committed to the discretion of the district court in 1836, and remained so through ensuing revisions of the Patent Act. *See* Patent Act of 1836, Ch. 357, § 14 ("[I]t shall be in the power of the court to render judgment for any sum

above the amount found . . . not exceeding three times the amount thereof, according to the circumstances of the case . . . ." (emphasis added)); *see also* Patent Act of 1870, Ch. 230, § 59.

The current statute, enacted in 1952 and codified at 35 U.S.C. § 284, also includes a discretionary enhanced damages provision: "[T]he court *may* increase the damages up to three times the amount found or assessed." 35 U.S.C. § 284 (emphasis added). Notably, neither § 284 nor its predecessors have conditioned a district court's discretion to enhance damages on willfulness, bad faith, or any other exceptional circumstances.

In the past, the Federal Circuit recognized that enhanced damages may be appropriate in a variety of circumstances. A finding of willful infringement was one such situation. *See, e.g.*, *Johns Hopkins Univ. v. CellPro, Inc.*, 152 F.3d 1342, 1364–65 (Fed. Cir. 1998); *see also Amsted Indus. Inc. v. Buckeye Steel Castings Co.*, 24 F.3d 178, 183–84 (Fed. Cir. 1994); *SRI Int'l, Inc. v. Advanced Tech. Labs., Inc.*, 127 F.3d 1462, 1468–69 (Fed. Cir. 1997). Absent a finding of willful infringement, bad faith alone could also support an award of enhanced damages. *See, e.g.*, *Yarway Corp. v. Eur-Control USA, Inc.*, 775 F.2d 268, 277 (Fed. Cir. 1985); *King Instruments Corp. v. Perego*, 65 F.3d 941, 947 (Fed. Cir. 1995). The Federal Circuit further recognized that enhanced damages could serve a compensatory purpose by allowing for discretionary increases where the amount of damages that could be proven by a successful plaintiff was inadequate to

compensate for the infringement. *See, e.g.*, *King*, 65 F.3d at 951 n.6; *see also Sherman Indus., Inc. v. Proto-Vest, Inc.*, 732 F.2d 168 (Fed. Cir. 1984).

The Federal Circuit historically analyzed willfulness under the totality of the circumstances, which included "not only such aspects as the closeness or complexity of the legal and factual questions presented, but also commercial factors that may have affected the infringer's actions. Aspects in mitigation, such as whether there was independent invention or attempts to design around and avoid the patent or any other factors tending to show good faith, should be taken into account and given appropriate weight." *SRI*, 127 F.3d at 1465; *Knorr-Bremse Systeme Fuer Nutzfahrzeuge GmbH v. Dana Corp.*, 383 F.3d 1337, 1342 (Fed. Cir. 2004) (*en banc*) ("Determination of willfulness is made on consideration of the totality of the circumstances."); *nCube Corp. v. SeaChange Int'l, Inc.*, 436 F.3d 1317, 1323–24 (Fed. Cir. 2006).

If a basis for enhancing damages existed (such as willfulness, bad faith, or compensatory reasons), the Federal Circuit then applied a multi-factor discretionary test to determine whether, and to what extent, enhanced damages under § 284 were appropriate. *See, e.g.*, *Read Corp. v. Portec, Inc.*, 970 F.2d 816, 826–28 (Fed. Cir. 1992). These factors accounted for a wide range of considerations, including: "whether the infringer deliberately copied the ideas or design of another"; the "[c]loseness of the case"; the "[d]uration of [the] defendant's

misconduct"; and any "[r]emedial action by the defendant." *Id.*

The willfulness landscape changed in 2007 with the Federal Circuit's decision in *Seagate*. There, the *en banc* Federal Circuit announced that "an award of enhanced damages *requires* a showing of willful infringement." *In re Seagate Tech., LLC*, 497 F.3d 1360, 1368 (Fed. Cir. 2007) (*en banc*) (emphasis added). The Federal Circuit also articulated a rigid and more stringent test for willful infringement that no longer considered the totality of the circumstances.

Under the new *Seagate* test, willfulness (and thus entitlement to seek enhanced damages) must be proven by first establishing with clear and convincing evidence that "the infringer acted despite an objectively high likelihood that its actions constituted infringement of a valid patent." *Id.* at 1371. "The state of mind of the accused infringer is not relevant" to this first inquiry. *Id.* If the "threshold objective standard is satisfied," then the patent owner must establish by clear and convincing evidence that "this objectively-defined risk was either known or so obvious that it should have been known to the accused infringer." *Id.* The *Seagate* court "le[ft] it to future cases to further develop the application of this standard." *Id.*

"Future cases," including this one, have established that "[o]bjective recklessness will not be found where the accused infringer's 'position is susceptible to a reasonable conclusion of no

infringement'" or invalidity.[1] App. 22a (*citing Uniloc USA, Inc. v. Microsoft Corp.*, 632 F.3d 1292, 1310 (Fed. Cir. 2011)); *see also Halo Elecs., Inc. v. Pulse Elecs., Inc.*, 769 F.3d 1371, 1382 (Fed. Cir. 2014); *Spine Solutions, Inc. v. Medtronic Sofamor Danek USA, Inc.*, 620 F.3d 1305, 1319–20 (Fed. Cir. 2010). Indeed, the Federal Circuit has expressly held that arguments and theories developed solely for litigation and not previously known to the infringer can preclude a finding of objective recklessness, unless they are shown to be unreasonable by clear and convincing evidence. *See Global Traffic Techs. LLC v. Morgan*, Nos. 2014-1537, 2014-1566, 2015 WL 3513416, at *7 (Fed. Cir. June 4, 2015). In short, under the current framework, the objective recklessness inquiry has become dispositive of willfulness. Even in circumstances involving egregious copying and bad faith, enhanced damages cannot be awarded unless the patentee can prove the absence of any plausible defensive arguments. *See, e.g.*, App. 21a-24a.

---

[1] In *Commil USA, LLC v. Cisco Systems, Inc.*, 135 S. Ct. 1920, 1928 (2015), this Court held that a defendant's reasonable belief of patent invalidity is not a defense to a claim of induced infringement under 35 U.S.C. § 271(b). In particular, the Court explained that, "if belief in invalidity were a defense to induced infringement, the force of [the] presumption [of patent validity under 35 U.S.C. § 282(a)] would be lessened to a drastic degree, for a defendant could prevail if he proved he reasonably believed the patent was invalid. That would circumvent the high bar Congress is presumed to have chosen: the clear and convincing standard." *Id.* at 1929. *Commil* does not directly address whether an adjudged infringer can defeat willfulness and enhanced damages by relying solely on a reasonable belief of invalidity.

The Federal Circuit long treated willfulness as a question of fact reviewed with deference to the factfinder, and this practice continued in the years immediately after *Seagate*. *See, e.g.*, *Powell v. Home Depot U.S.A., Inc.*, 663 F.3d 1221, 1228 (Fed. Cir. 2011) ("Willfulness is a question of fact, and our review on appeal is 'limited to asking whether [the jury's] verdict is supported by substantial evidence.'") (quoting *i4i Ltd. P'ship v. Microsoft Corp.*, 598 F.3d 831, 859 (Fed. Cir. 2010)). Then, in 2012, a panel of the Federal Circuit changed course and held that "the objective determination of recklessness, even though predicated on underlying mixed questions of law and fact, is best decided by the judge as a question of law subject to *de novo* review." *See Bard Peripheral Vascular, Inc. v. W.L. Gore & Assocs., Inc.*, 682 F.3d 1003, 1007–08 (Fed. Cir. 2012).

In summary, prior to considering whether enhanced damages may be awarded under 35 U.S.C. § 284, the Federal Circuit now requires a finding of willfulness based on a two-part objective/subjective test requiring clear and convincing evidence, where the objective prong is reviewed *de novo* and cannot be met barring a complete absence of plausible defenses on appeal.

### B. The Parallel Prejudgment Interest and Exceptional Case Jurisprudence

While this Court has not yet provided guidance to the Federal Circuit regarding the

enhanced damages language of § 284, it has analyzed the prejudgment interest language of that provision, which reads: "Upon finding for the claimant the court shall award the claimant damages adequate to compensate for the infringement . . together with interest and costs as fixed by the court." 35 U.S.C. § 284. In *General Motors Corp. v. Devex Corp.*, 461 U.S. 648, 653 (1983), the Court refused to impose a common law standard of exceptionality onto the prejudgment interest statute, holding that "[o]n the face of § 284, a court's authority to award interest is not restricted to exceptional circumstances, and there is no warrant for imposing such a limitation. When Congress wished to limit an element of recovery in a patent infringement action, it said so explicitly." The Court observed that, while § 285 expressly provides that a court can award attorneys' fees to a prevailing party only "in exceptional cases," the power to award interest under § 284 was "not similarly restricted." *Id.*

This Court has also given clear instructions on interpreting the attorneys' fees provision of § 285. Although the availability of attorneys' fees under the terms of the statute is more limited than prejudgment interest, the *Brooks Furniture* test that the Federal Circuit had used to determine what constituted an "exceptional case" under § 285 was held to be too narrow. *Brooks Furniture* imposed a two-part objective-subjective inquiry similar, if not identical, to the *Seagate* test for willfulness. *See Brooks Furniture Mfg., Inc. v. Dutailier Int'l, Inc.*, 393 F.3d 1378, 1381 (Fed. Cir. 2005) ("A case may be deemed exceptional [a]bsent misconduct in

conduct of the litigation or in securing the patent . . . only if both (1) the litigation is brought in subjective bad faith, and (2) the litigation is objectively baseless."); *see also iLOR, LLC v. Google, Inc.*, 631 F.3d 1372, 1377 (Fed. Cir. 2011) ("The objective baselessness standard for enhanced damages and attorneys' fees against a non-prevailing plaintiff under *Brooks Furniture* is *identical* to the objective recklessness standard for enhanced damages and attorneys' fees against an accused infringer for § 284 willful infringement actions under [*Seagate*]." (emphasis added)). The Federal Circuit also reviewed the objective prong of the *Brooks Furniture* test *de novo*, a standard of review it likewise applied to the *Seagate* test. *See Highmark, Inc. v. Allcare Health Mgmt. Sys., Inc.*, 687 F.3d 1300, 1309 (Fed. Cir. 2012).

Last year, this Court overturned the Federal Circuit's § 285 framework in its entirety, including both the *Brooks Furniture* test and *de novo* review of exceptional case determinations. *See Octane Fitness, LLC v. ICON Health & Fitness, Inc.*, 134 S. Ct. 1749 (2014); *Highmark Inc. v. Allcare Health Mgmt. Sys., Inc.*, 134 S. Ct. 1744 (2014).

In *Octane Fitness*, this Court concluded that the *Brooks Furniture* test was "unduly rigid," especially given the "inherently flexible" and discretionary nature of § 285. *See* 134 S. Ct. at 1755–56. The Court noted that the text of § 285 "is patently clear" and "imposes one and only one constraint on district courts' discretion to award attorney's fees in patent litigation: The power is

reserved for 'exceptional' cases." *Id.* Under § 285, "[d]istrict courts may determine whether a case is 'exceptional' in the case-by-case exercise of their discretion, considering the totality of the circumstances." *Id.* at 1756. The Court explained that "a case presenting *either subjective bad faith or exceptionally meritless claims* may sufficiently set itself apart from mine-run cases to warrant a fee award." *Id.* at 1757 (emphasis added).

In *Highmark*, the companion case to *Octane Fitness*, the Court held that district courts' exceptional case determinations under § 285 must be reviewed for abuse of discretion, not *de novo*. 134 S. Ct. at 1748. The Court explained that, "as a matter of the sound administration of justice, the district court is better positioned to decide whether a case is exceptional because it lives with the case over a prolonged period of time," especially because "the [exceptionality] question is 'multifarious and novel, not susceptible to useful generalization of the sort that *de novo* review provides." *Id.* at 1748–49 (internal citations and quotation marks omitted).

Individual Federal Circuit judges disagree on how this Court's *Octane Fitness* and *Highmark* decisions pertaining to the *Brooks Furniture* test and § 285 impact the Federal Circuit's formerly "identical" willfulness jurisprudence and its interpretation of § 284. *See Halo Elecs., Inc. v. Pulse Elecs., Inc.*, 780 F.3d 1357, 1362–64 (Fed. Cir. 2015) (O'Malley, J., joined by Hughes, J., dissenting). The Court's guidance is required to clarify this uncertainty.

## REASONS FOR GRANTING THE PETITION

This case warrants *certiorari* review because the Federal Circuit's treatment of enhanced damages is inconsistent with the plain language of 35 U.S.C. § 284 and this Court's precedent. Specifically, the Federal Circuit has improperly grafted a rigid willfulness requirement onto § 284, the discretionary enhanced damages statute. The plain text of § 284 "unambiguously omits any such requirement." *Seagate*, 497 F.3d at 1377 (Gajarsa, J., joined by Newman, J., concurring). This Court should grant *certiorari* to clarify that the Federal Circuit must "adhere to the plain meaning of the statute and leave the discretion to enhance damages in the capable hands of the district courts." *See id.*

In addition, the Federal Circuit's willfulness framework cannot be reconciled with this Court's precedents interpreting related provisions, including a pair of decisions last term concerning the availability of attorneys' fees under 35 U.S.C. § 285. Moreover, the Federal Circuit's existing jurisprudence utterly negates the intended deterrent effect of § 284 because even bad-faith infringers can defeat enhanced damages on appeal simply by retaining skillful counsel to create a merely reasonable post-suit defense, regardless of whether such defense is correct, and regardless of whether the infringer was even aware of or relied upon such defense prior to engaging in its infringing acts.

The district court, not the appellate court, is best suited to assess the propriety of enhancing

damages in a given case. In the past, the Federal Circuit's approach to enhanced damages appropriately placed the balance of authority in the factfinder's hands. Over time, however, a series of Federal Circuit decisions has shifted that balance away from the district court and the jury and toward the appellate court. As a consequence, district courts' discretionary awards of enhanced damages have, for all intents and purposes, been subject to *de novo* review in every respect. The judges of the Federal Circuit clearly disagree about the correctness of the existing law, but the court as a whole appears unwilling to reconsider the issue. This Court's guidance is required to resolve that dispute.

## I. WILLFULNESS SHOULD NOT BE A PREREQUISITE FOR ENHANCED DAMAGES

### A. The Federal Circuit's Enhancement Regime Is Unsupportable Given The Plain Language Of § 284

The § 284 analysis should begin and end with the text of the statute. *Cf. Octane Fitness*, 134 S. Ct. at 1755. The Federal Circuit's interpretation of § 284 as requiring a predicate finding of willfulness is inconsistent with the statutory text, which states only that "the court may increase the damages up to three times the amount found or assessed." 35 U.S.C. § 284. This text is "patently clear"—it allows for enhanced damages at the district court's

discretion, with no additional restrictions. *Cf. Octane Fitness*, 134 S. Ct. at 1755.

Despite the plain language of § 284, the Federal Circuit has ruled that district courts cannot exercise their discretion to enhance damages unless a patentee has first proven willfulness by clear and convincing evidence. *See Seagate*, 497 F.3d at 1368, 1371. Moreover, the Federal Circuit has instituted a rigid, two-prong test for willfulness under which patentees must first show that an infringer had no objectively reasonable defenses before the infringer's bad faith can even be considered. *See id.* at 1371. Worse still, the infringer can rely on defenses devised solely for litigation, *see Global Traffic*, 2015 WL 3513416, at *7, and the Federal Circuit will review the reasonableness of those defenses *de novo* on appeal. *See Bard*, 682 F.3d at 1007. The Federal Circuit's rigid and inflexible willfulness framework is so demanding that it renders enhanced damages under § 284 largely unattainable. *Cf. Octane Fitness*, 134 S. Ct. at 1756–58.

In enacting § 284, Congress could not have envisioned this rigid regime that finds no support in the plain language of the statute. Indeed, when § 284 was reenacted as part of the America Invents Act in 2011, Congress decided not to include the *Seagate* standard for willfulness, after explicitly considering the issue. *See* S. Rep. No. 111 18, at 94–95 (2009); S. 23, 112th Cong. (Jan. 25, 2011). An initial version of the statute had included such a ratification but prompted serious opposition, and

ultimately this provision was removed from the bill in order to ensure passage.

In keeping with the statutory text, § 284 should be interpreted as written to allow district courts to consider the totality of the circumstances in determining whether, and by how much, to enhance patent damages.

### B. The Federal Circuit's Grafting of a Willfulness Requirement Onto § 284 Is Flatly Inconsistent With Parallel Supreme Court Cases

Although this Court has not yet interpreted the enhanced damages portion of § 284, it has established guideposts in its reading of the prejudgment interest portion of § 284 in its *General Motors* decision. The relevant text of § 284 states that "[u]pon finding for the claimant the court shall award the claimant damages adequate to compensate for the infringement . . . together with interests and costs as fixed by the court." 35 U.S.C. § 284. Prior to *General Motors*, the appellate courts had reached differing conclusions as to whether an award of prejudgment interest under § 284 should be confined to cases in which the so-called *Duplate* standard was satisfied. *See General Motors*, 461 U.S. at 650–53. This Court held that the language of § 284 was clear and did not incorporate any such restriction:

> We have little doubt that § 284 does not incorporate the *Duplate* standard.

> Under that standard, which evolved as a matter of federal common law, prejudgment interest could not be awarded where damages were unliquidated absent bad faith or other exceptional circumstances. By contrast, § 284 gives a court general authority to fix interest and costs. On the face of § 284, a court's authority to award interest is not restricted to exceptional circumstances, and there is no warrant for imposing such a limitation.

*Id.* at 653.

This same analysis applies equally to the enhanced damages component of § 284. Like the prejudgment interest language, the enhanced damages language does not restrict district courts' discretion to exceptional circumstances. Because the plain text of § 284 regarding enhanced damages includes no limiting language whatsoever, the Federal Circuit's continued grafting of a rigid willfulness requirement onto § 284 conflicts with the principles established by this Court in *General Motors*.

Equally troubling, the Federal Circuit's enhancement regime is also inconsistent with this Court's opinion in *Octane Fitness*, interpreting the awarding of attorneys' fees under 35 U.S.C. § 285. Like § 284, § 285 gives district courts discretion to award "reasonable attorney fees to the prevailing party," but unlike § 284, § 285 limits this discretion

to "exceptional cases." Based on the statutory language alone, district courts are *less* constrained in their discretion to award enhanced damages than they are in their discretion to award attorneys' fees. Yet this Court has already ruled that, under § 285, "[d]istrict courts may determine whether a case is 'exceptional' in the case-by-case exercise of their discretion, considering the totality of the circumstances." *Octane Fitness*, 134 S. Ct. at 1756. *A fortiori*, district courts must have at least that same discretion under the less restrictive § 284.

This Court should grant *certiorari* and clarify that § 284, like § 285, must be interpreted to allow district courts the discretion to consider the full range of relevant circumstances in determining when, and to what extent, enhanced damages are appropriate in any given case.

### C. The Judges Of The Federal Circuit Disagree About The Propriety of Grafting Willfulness Onto § 284

The need for this Court's guidance is further underscored by the Federal Circuit's confusion and disagreement over the proper interpretation of the enhanced damages language of § 284. In *Seagate*, two Federal Circuit judges wrote separately to express their view that willfulness should not be a prerequisite to an award of enhanced damages; rather, under § 284, the district court should have flexibility to enhance damages in appropriate circumstances. *See Seagate*, 497 F.3d at 1376–84

(Gajarsa, J., joined by Newman, J., concurring). These judges noted that, because "the language of the statute unambiguously omits" a willfulness requirement and "because there is no principled reason for continuing to engraft a willfulness requirement onto section 284," the Federal Circuit "should adhere to the plain meaning of the statute and leave the discretion to enhance damages in the capable hands of the district courts." *Id.* at 1377, 1381.

More recently, four other members of the Federal Circuit have recognized that the Federal Circuit's interpretation of § 284 has gone seriously awry. *See Halo*, 780 F.3d at 1359 (Taranto, J., joined by Reyna, J., concurring) ("To begin with, there are fundamental questions about the substantive standards. One is whether willfulness should remain a necessary condition for enhancement under § 284's 'may' language . . . ."); [2] *id.* at 1362–63 (O'Malley, J., joined by Hughes J., dissenting) ("Because § 284 also places the inquiry squarely within a trial court's discretion, we should rethink the extent to which we are authorized to impose restrictions on the manner

---

[2] The Federal Circuit issued its order denying Halo's petition for rehearing *en banc* on the same day as its order denying Stryker's *en banc* petition. As Judge Taranto noted in *Halo*, the issues presented there were narrower and did not raise the basic question of whether an absolute willfulness requirement should be grafted onto § 284 in the first place. *See Halo*, 780 F.3d at 1358 (Taranto, J., joined by Reyna, J., concurring). Stryker's petition for rehearing *en banc*, on the other hand, squarely raised the issue.

in which that discretion is exercised, outside the normal restrictions imposed by the Federal Rules of Evidence and application of the abuse of discretion standard. We should now assess whether a flexible test similar to what we have been told to apply in the § 285 context is also appropriate for an award of enhanced damages."). Yet despite recognition from a number of Federal Circuit judges that the court's restrictions on § 284 enhanced damages are misplaced, the Federal Circuit appears unwilling to remedy the situation, having rejected the opportunity to reconsider the issue, including in this case. *Certiorari* is required to return to district courts the discretion conferred by Congress to award enhanced damages in appropriate circumstances.

## II. THE *SEAGATE* FRAMEWORK FOR WILLFULNESS CANNOT STAND

At a minimum, the Federal Circuit's existing willfulness framework is impermissibly rigid and unduly hinders patent owners' ability to secure enhanced damages, even in the face of flagrant, bad-faith infringement. Congress could not have intended the deterrent effect of enhanced damages to be diluted by a burdensome willfulness framework.

### A. *Seagate* Undermines The Deterrent Power Of Enhanced Damages

The prospect of enhanced damages is meant, at the very least, to dissuade would-be infringers

from copying patented inventions. Innovators like Stryker commonly spend years and invest enormous sums of money developing pioneering inventions. The ability to recover enhanced damages for patent infringement serves as an added assurance that a patentee's investment will be protected from wholesale copying, especially by direct competitors.

But the existing *Seagate* framework dilutes this intended deterrent effect of § 284. As happened here, infringers who have knowingly copied a patented invention can defeat willfulness and enhanced damages so long as their appellate counsel is able to convince the Federal Circuit of the mere plausibility of their defenses on appeal under the court's *de novo* review. Ordinarily, competent defense counsel can easily devise at least one minimally "reasonable" defense for litigation, particularly since it is already understood that a reasonable defense in the enhanced damages context is something less than a winning one. *See, e.g.*, *Spine Solutions, Inc. v. Medtronic Sofamor Danek USA, Inc.*, 620 F.3d 1305, 1319–20 (Fed. Cir. 2010). Indeed, the Federal Circuit regularly affirms on validity but reverses on willfulness based on an adjudged infringer's "reasonable belief of patent invalidity." *See, e.g.*, App. 21a-24a; *Innovention Toys, LLC v. MGA Entm't, Inc.*, No. 2014-1731, 2015 WL 1917997, at *6 (Fed. Cir. Apr. 29, 2015); *Spine Solutions*, 620 F.3d at 1319–20. Under current law, the presumption of patent validity under 35 U.S.C. § 282(a) does not even come into play when considering the objective reasonableness of an invalidity defense. As such, objective reasonableness

is a very low threshold for an infringer to meet.

In stark contrast, patentees shoulder a far more onerous burden in showing that a defendant has proffered no objectively reasonable defenses, especially when this must be demonstrated by clear and convincing evidence. Indeed, as happened in this case, infringers can strategically select willfulness defenses for appeal that were not presented in district court proceedings, thereby rendering the district court's analysis incomplete and making it seem as though the district court failed to review the objective reasonableness of the infringer's specific defenses. *Compare* App. 73a-79a, *with* App. 21a-24a. So long as an infringer can present a minimally reasonable, *post-hoc* defense, district courts are categorically precluded from taking bad faith into account or considering enhanced damages. This situation is unfair to patentees who have invested in innovation, and Congress could not have intended that § 284 would be gutted of its deterrent power in this way.

### B. *Seagate* Has Created An Artificial And Unmanageable "Evidentiary Wall"

Willfulness under *Seagate* does not carry its ordinary meaning. Willfulness speaks to the "will"—the state of mind—of the infringer. Starting with *Seagate*, however, the Federal Circuit has required patentees prove what it calls "objective" willfulness by clear and convincing evidence before the

factfinder may consider any evidence of subjective willfulness. *See, e.g.*, *Powell*, 663 F.3d at 1236. Consequently, even in cases involving significant evidence of bad faith (like this one), district courts must completely ignore any such evidence in determining whether an infringer's conduct was objectively willful. This "evidentiary wall . . between the objective and subjective portions of the inquiry . . . preclude[s] considerations of subjective bad faith—no matter how egregious—from informing [the] inquiry of the objective baselessness of a claim and preclude[s] the weakness a claim or defense from being indicative of a parties' [*sic*] subjective bad faith." *Halo*, 780 F.3d at 1362 (O'Malley, J., joined by Hughes, J., dissenting); *see also Global Traffic*, 2015 WL 3513416, at *7 (reversing willfulness finding because the district court considered the "ample evidence" of the accused infringers' knowledge of the patent in assessing *Seagate*'s objective prong).

This objective/subjective distinction is not only unduly restrictive, but it is also an "artificial and awkward construct" that causes confusion and is easily misapplied. *Halo*, 780 F.3d at 1362 (O'Malley, J., joined by Hughes, J., dissenting). Infringement does not occur in a vacuum; rather, a particular party infringes a particular patent under particular circumstances. In this case, for example, Zimmer admitted copying Stryker's product, knowing that it was patented. The objective reasonableness of Zimmer's defenses, to the extent relevant, thus should have been evaluated in light of Zimmer's admitted copying. Under the Federal Circuit's

existing willfulness framework, however, the objective inquiry was performed without considering Zimmer's bad faith or actual reliance on its proffered defenses.

Indeed, "subjective" considerations often are quite relevant to objective ones. Only nonobvious inventions can be patented, for instance, and it is well-established that copying constitutes objective evidence of nonobviousness. Yet because copying itself seems like a subjective consideration, courts have often ignored it in considering objective willfulness. Indeed, that appears to be what the Federal Circuit did here. Theoretically, perhaps, this should not happen, but the rigid and artificial distinction *Seagate* creates makes such mistakes common.

This result is incompatible with the principles this Court articulated for exceptional case determinations under § 285, where "a case presenting *either* subjective bad faith *or* exceptionally meritless claims may sufficiently set itself apart from mine-run cases to warrant a fee award." *Octane Fitness*, 134 S. Ct. at 1757 (emphasis added). Given that § 284 imposes even fewer constraints on district courts' discretion than § 285, courts should be entitled to weigh objective and subjective considerations as appropriate under the circumstances in assessing willfulness, just as they are entitled to do in assessing exceptional case. Presently, however, the Federal Circuit's willfulness framework is driven almost entirely by objective considerations reviewed in a vacuum.

The Federal Circuit purportedly relied on this Court's decision in *Safeco Insurance Co. of America v. Burr*, 551 U.S. 47 (2007), which dealt with "willful" violations of the Fair Credit Reporting Act, as the basis for *Seagate*'s evidentiary wall. In *Safeco*, this Court rejected the argument that "evidence of subjective bad faith can support a willfulness finding" where a party had adopted an "objectively reasonable" reading of the statute. *Id.* at 70 n.20. The Court explained that "Congress could not have intended [liability for willfulness] for those who *followed* an interpretation that could reasonably have found support in the courts, whatever their subjective intent may have been." *Id.* (emphasis added). The Court thus considered whether the accused willful parties *actually* operated under an objectively reasonable interpretation of the statute *at the time of their disputed conduct*, not whether they devised that reasonable interpretation after the fact.

Over time, the Federal Circuit has expanded the *Seagate* test to permit reasonable *post-hoc* defenses to preclude a finding of willfulness, regardless of whether the infringer was aware of those defenses prior to engaging in infringement. *Compare i4i Ltd. P'ship v. Microsoft Corp.*, 598 F.3d 831, 860 (Fed. Cir. 2010) ("Based on its own assessment of the evidence and Microsoft's defenses, the jury was free to decide for itself whether Microsoft reasonably believed there were any substantial defenses to a claim of infringement."), *with* App. 21a-24a; *Global Traffic*, 2015 WL 3513416, at *7; *Halo*, 769 F.3d at 1382. This is inconsistent with *Safeco*, which presumed that the defendant

adopted an "objectively reasonable" reading of the statute prior to engaging in the disputed conduct. *See* 551 U.S. at 70 n.20.

### C. *Seagate* Improperly Strips District Courts Of Discretion

Even if willfulness is properly a prerequisite for enhanced damages in patent cases, district courts should have discretion to consider all relevant evidence—objective, subjective, or anything in between—in making willfulness determinations, and to weigh that evidence accordingly. *Accord Octane Fitness*, 134 S. Ct. at 1757 ("[A] case presenting either subjective bad faith or exceptionally meritless claims may sufficiently set itself apart from mine-run cases to warrant a fee award."); *see also Knorr-Bremse*, 383 F.3d at 1347 ("[P]recedent . authorizes the trier of fact to accord each factor the weight warranted by its strength in the particular case. We deem this approach preferable to abstracting any factor for per se treatment, for this greater flexibility enables the trier of fact to fit the decision to all of the circumstances.").

The Federal Circuit has already devised a multi-factor, discretionary test for enhanced damages that accounts for the relevant willfulness considerations. Under existing Federal Circuit jurisprudence, the so-called *Read* test comes into play only after willfulness has been found and the district court is considering whether and by how

much to enhance damages. *See Read*, 970 F.2d at 826–28. In *Read*, the Federal Circuit noted that "[t]he paramount determination in deciding to grant enhancement and the amount thereof is the egregiousness of the defendant's conduct based on all the facts and circumstances." *Id.* at 826. The Federal Circuit then articulated a list of factors for district courts to consider in deciding whether to enhance damages. *See id.* at 827. These include:

1. "[W]hether the infringer deliberately copied the ideas or design of another."
2. "[W]hether the infringer, when he knew of the other's patent protection, investigated the scope of the patent and formed a good-faith belief that it was invalid or that it was not infringed."
3. "[T]he infringer's behavior as a party to the litigation."
4. "[D]efendant's size and financial condition."
5. "Closeness of the case."
6. "Duration of [the] defendant's misconduct."
7. "Remedial action by the defendant."
8. "Defendant's motivation for harm."
9. "Whether defendant attempted to conceal its misconduct."

*Id.* The Federal Circuit acknowledged that consideration of these factors was "in line with punitive damages considerations in other tort contexts." *Id.* at 827–28.

The *Read* test allows district courts to consider both objective and subjective factors under the totality of the circumstances. Moreover, the *Read* test accounts for situations where enhanced damages might be inappropriate because an infringer had, in good faith, espoused an objectively reasonable defense *before* knowingly copying a patented invention. *See id.* at 827. The test also gives district courts discretion to decide how much to enhance damages, thereby allowing courts to fashion an award commensurate with the infringer's degree of culpability. *See id.* at 828. Applying the *Read* test for enhancement in the first instance would better ensure that infringers are spared from enhanced damages when they proactively investigate known infringement risks, but not when they copy first in bad faith and concoct "reasonable" defenses later.

### D. Willfulness Should Be Reviewed With Deference To The Factfinder

The Federal Circuit's rigid framework governing enhanced damages awards impermissibly constrains the discretion that the Patent Act gives district courts in numerous respects and represents an unjustified attempt to control their decision-making at the appellate level. This increase in constraints on district court authority has been

accompanied by a complementary development in the standard by which district court decisions are reviewed. The Federal Circuit now engages in *de novo* review of district court findings on objective willfulness, notwithstanding a district court's greater familiarity with the case, proximity to evidence and experts, and ability to assess the overall picture on questions like validity and infringement. *See Bard*, 682 F.3d at 1007. Regardless of whether *Seagate* is the proper threshold for enhanced damages, the objective prong should still be reviewed with deference. For many of the same reasons this Court last term rejected *de novo* review of exceptional case determinations under § 285 and instead imposed an abuse-of-discretion standard, *see Highmark*, 134 S. Ct. at 1748–49, appellate review of district court findings on willfulness should be deferential.

Like § 285 exceptional case determinations, objective willfulness determinations require the district court to evaluate the strength and reasonableness of a party's litigating positions. *See Octane Fitness*, 134 S. Ct. at 1756; *Lee v. Mike's Novelties, Inc.*, 543 F. App'x 1010, 1017 (Fed. Cir. 2013) (finding no objective willfulness where evidence on infringement was "close"); *DePuy Spine, Inc. v. Medtronic Sofamor Danek, Inc.*, 567 F.3d 1314, 1336–37 (Fed. Cir. 2009) (finding no willfulness where defendant "presented a substantial question of noninfringement under the doctrine of equivalents"). Indeed, many of the same considerations will likely factor into both the district court's objective willfulness and exceptional case analyses. These analyses benefit from the district court's long-term,

in-depth familiarity with the parties and issues in a given case. In contrast, the Federal Circuit's exposure to a case is limited to reviewing the parties' briefing and conducting a single oral argument. It makes little sense (and could lead to conflicting, even absurd, results) to allow the Federal Circuit to review the same set of considerations once with deference for purposes of exceptional case and again *de novo* for purposes of willfulness.

The judges of the Federal Circuit disagree over the proper standard of review for objective willfulness. Several judges have criticized the use of *de novo* review of objective willfulness. *See, e.g.*, *Halo*, 780 F.3d at 1361–64 (O'Malley, J., joined by Hughes, J., dissenting); *Halo*, 769 F.3d at 1385–86 (O'Malley, J., joined by Hughes, J., concurring); *Highmark, Inc. v. Allcare Health Mgmt. Sys., Inc.*, 701 F.3d 1351, 1357 n.1 (Fed. Cir. 2012) (Moore, J., joined by Rader, C.J., O'Malley, J., Reyna, J., Wallach, J., dissenting); *Id.* at 1367 n.5 (Reyna, J., joined by Moore, J., O'Malley, J., Wallach, J., dissenting); *Highmark*, 687 F.3d at 1320–21 (Mayer, J., dissenting-in-part). But as with other aspects of the *Seagate* regime, the Federal Circuit has refused to consider the issue *en banc*. App. 1a-2a (denying petition for rehearing *en banc*); *see also Bard Peripheral Vascular, Inc. v. W.L. Gore & Assocs., Inc.*, No. 2014-1114 (Fed. Cir. Apr. 8, 2015) (same); *Halo*, 780 F.3d at 1358 (same). Because of the Federal Circuit's exclusive jurisdiction over patent appeals, there will be no opportunity for other circuits to provide guidance on this issue. Given the Federal Circuit's failure to resolve this dispute internally,

this Court should intervene to provide the necessary guidance.

## III. THIS CASE SQUARELY PRESENTS AN IMPORTANT ISSUE OF LAW ON WHICH THE SUPREME COURT'S GUIDANCE IS NEEDED

The issues raised in this case are legal ones appropriate for this Court's review. They turn not on complex fact-finding but on the appropriateness of the Federal Circuit's rules for enhanced damages in light of the statutory text and the principles this Court has announced in parallel patent law contexts. At issue is a body of law that has, over the last eight years, progressively moved away from its statutory foundation.

A number of judges on the Federal Circuit have repeatedly called attention to the problems raised by *Seagate* and its progeny, but the court as a whole has been unwilling to revisit the issue and appears from its record in cases like this simply to oppose the policy reflected in the statute allowing for such awards. The statute is open-ended, yet this Court has never opined on the considerations that should be brought to bear in making enhanced damages awards. This Court's guidance is needed.

These issues implicate the basic deterrent and compensatory aims of the patent system. Enhanced damages need not be awarded routinely to be effective, but they must clearly be available in cases

of bad faith.

Undoubtedly, the provisions of the Patent Act can be abused by vexatious litigants pressing weak claims. But they can also be abused by unscrupulous copyists determined to profit from the inventions of another. This is a case involving patents held by a pioneering inventor, infringement by a direct competitor, and copying of inventions known to be patented. It is far removed from the concerns voiced in other contexts about patent "trolls." It involves the core concerns of the patent system and the principles essential to its basic operation.

In recent years, this Court has repeatedly rejected the Federal Circuit's attempt to impose rigid and mechanical rules in various areas of patent law. *See, e.g.*, *Octane Fitness*, 134 S. Ct. at 1756 (attorneys' fees); *Teva Pharm. USA, Inc. v. Sandoz, Inc.*, 135 S. Ct. 831, 835 (2015) (claim construction); *Bilski v. Kappos*, 561 U.S. 593, 604 (2010) (patentable subject matter); *KSR Int'l Co. v. Teleflex Inc.*, 550 U.S. 398, 415 (2007) (obviousness). Enhanced damages represents another area in which the Federal Circuit has gone astray, especially in light of the broad and flexible language of § 284.

## CONCLUSION

For all the foregoing reasons, the petition for a writ of *certiorari* should be granted.

Respectfully submitted,

SHARON A. HWANG
*Counsel of Record*
DEBORAH A. LAUGHTON
STEPHANIE F. SAMZ
CAROLINE A. TEICHNER
McAndrews, Held & Malloy, Ltd.
500 West Madison Street
Suite 3400
Chicago, Illinois 60661
(312) 775-8000
shwang@mcandrews-ip.com

*Counsel for Petitioner*

June 2015

# APPENDIX

**APPENDIX A — DENIAL OF REHEARING IN THE UNITED STATES COURT OF APPEALS FOR THE FEDERAL CIRCUIT, DATED MARCH 23, 2015**

UNITED STATES COURT OF APPEALS
FOR THE FEDERAL CIRCUIT

STRYKER CORPORATION, STRYKER PUERTO RICO, LTD., STRYKER SALES CORPORATION,

*Plaintiffs-Appellees,*

v.

ZIMMER, INC., ZIMMER SURGICAL, INC.,

*Defendants-Appellants,*

ZIMMER ORTHOPAEDIC SURGICAL PRODUCTS,

*Defendant.*

2013-1668

Appeal from the United States District Court for the Western District of Michigan in No. 10-CV-1223, Judge Robert J. Jonker.

**ON PETITION FOR REHEARING EN BANC**

Before PROST, *Chief Judge*, NEWMAN, LOURIE, DYK, MOORE, O'MALLEY, REYNA, WALLACH, TARANTO, CHEN, and HUGHES, *Circuit Judges.*

PER CURIAM.

*Appendix A*

**ORDER**

Appellees Stryker Corporation, Stryker Puerto Rico, Ltd., and Stryker Sales Corporation filed a petition for rehearing en banc. A response to the petition was invited by the court and filed by appellants Zimmer, Inc. and Zimmer Surgical, Inc. Leave to file a reply was granted, and a reply was filed by the appellees. The petition was initially referred to the panel that heard the appeal. In a separate order issued today, the panel withdrew the opinion and replaced it with a revised opinion.

The petition, response, reply, and revised opinion were referred to the circuit judges who are in regular active service.

Upon consideration thereof,

IT IS ORDERED THAT:

(1) The petition for rehearing en banc is denied.

(2) The mandate of the court will issue March 30, 2015.

March 23, 2015
Date

FOR THE COURT

/s/ Daniel E. O'Toole
Daniel E. O'Toole
Clerk of Court

## APPENDIX B — OPINION OF THE UNITED STATES COURT OF APPEALS FOR THE FEDERAL CIRCUIT, FILED MARCH 23, 2015

UNITED STATES COURT OF APPEALS
FOR THE FEDERAL CIRCUIT

2013-1668

STRYKER CORPORATION, STRYKER PUERTO RICO, LTD., STRYKER SALES CORPORATION,

*Plaintiffs-Appellees*,

v.

ZIMMER, INC., ZIMMER SURGICAL, INC.,

*Defendants-Appellants*,

ZIMMER ORTHOPAEDIC SURGICAL PRODUCTS,

*Defendant.*

March 23, 2015, Decided

Appeal from the United States District Court for the Western District of Michigan in No. 10-CV-1223, Judge Robert J. Jonker

Before PROST, *Chief Judge*, NEWMAN and HUGHES, *Circuit Judges.*

PROST, *Chief Judge.*

*Appendix B*

Zimmer, Inc., Zimmer Surgical, Inc., and Zimmer Orthopaedic Surgical Products (collectively "Zimmer") appeal from the final judgment of the United States District Court for the Western District of Michigan that U.S. Patent Nos. 6,022,329 ("'329 patent"), 6,179,807 ("'807 patent"), and 7,144,383 ("'383 patent") were valid and willfully infringed. For the reasons stated below, we affirm the jury's findings that the patents were valid and infringed, and the jury's award of damages to plaintiff-appellees Stryker Corporation, Stryker Puerto Rico, Ltd., and Stryker Sales Corporation (collectively "Stryker"). However, we reverse the district court's judgment that Zimmer's infringement was willful, and, accordingly, we vacate its award of treble damages. Finally, we vacate and remand the district court's finding of exceptional case and its award of attorneys' fees.

I

The patents at issue concern pulsed lavage devices. Pulsed lavage devices deliver pressurized irrigation for certain medical therapies, including orthopedic procedures and cleaning wounds. The particular devices at issue in this case are portable, battery powered, and handheld. They include both suction and discharge tubes, so they both spray fluid from an external source and also suction off fluid and debris. These devices represent an improvement over older pulsed lavage systems that required a central power source and external mechanical pumps, which meant that they needed to be wheeled around the hospital.

*Appendix B*

Stryker and Zimmer are the two main competitors in the orthopedic pulsed lavage device market. Stryker began bringing battery-powered, handheld pulsed lavage devices to the marketplace in 1993. That same year, Stryker filed the application which eventually gave rise to the patents at issue. In February 2000, the first of these patents, the '329 patent, issued. Later that year Stryker sued another manufacturer, Davol Inc., for infringement. That suit settled in 2001, and Davol took a license on the '329 patent. The '807 patent subsequently issued in January 2001, and the '383 patent issued in December 2006.

Zimmer introduced its first portable pulsed lavage device, the Var-A-Pulse, in 1996. In 1998, Zimmer began to develop a new design, which came to market soon thereafter as the Pulsavac Plus range of products. Zimmer's Pulsavac Plus products achieved a peak of $55 million in annual sales in late 2007, before they were withdrawn from the marketplace due to a product recall, after which sales resumed in December 2008.

In 2010, Stryker sued Zimmer, alleging that Zimmer's Pulsavac Plus devices infringed various claims of the '329, '807, and '383 patents. The district court granted partial summary judgment in favor of Stryker, finding infringement of the '807 and '383 patents' asserted claims. The question of whether Zimmer infringed the single asserted claim of the '329 patent, as well as Zimmer's invalidity defenses against all of the asserted claims, went to trial. The jury found that the products infringed claim 2 of the '329 patent and that all the asserted claims were valid. The jury also awarded $70 million in lost profits.

It further found that Zimmer had willfully infringed all three patents. The jury also found that Stryker had marked substantially all of its products that commercially embodied the patents in suit during the period it sought damages, pursuant to 35 U.S.C. § 287(a).

In August 2013, the district court issued an order rejecting Zimmer's motions for judgment as a matter of law ("JMOL") on various issues, affirming the jury's verdict, awarding trebled damages for willful infringement, finding an exceptional case and thus awarding attorneys' fees to Stryker, and imposing a permanent injunction. The district court subsequently entered final judgment pursuant to its order.

Zimmer appeals. We have jurisdiction under 28 U.S.C. § 1295(a)(1).

II

We turn first to Zimmer's appeal on the issues of claim construction, infringement, and validity.

Claim construction is an issue of law that we review *de novo*. *Lighting Ballast Control LLC v. Philips Elecs. N. Am. Corp.*, 744 F.3d 1272, 1276-77 (Fed. Cir. 2014) (*en banc*). In construing a claim term, we look at the term's plain and ordinary meaning as understood by a person of ordinary skill in the art. *Phillips v. AWH Corp.*, 415 F.3d 1303, 1313 (Fed. Cir. 2005) (*en banc*). There is an exception to this general rule when a patentee sets out a definition and acts as her own lexicographer. *Thorner v.*

*Sony Computer Entm't Am., LLC*, 669 F.3d 1362, 1365 (Fed. Cir. 2012). Infringement is a question of fact. *Lucent Techs., Inc. v. Gateway, Inc.*, 580 F.3d 1301, 1309 (Fed. Cir. 2009). Invalidity by reason of anticipation under 35 U.S.C. § 102 is a question of fact. *Atlas Powder Co. v. Ireco, Inc.*, 190 F.3d 1342, 1346 (Fed. Cir. 1999). Invalidity by reason of obviousness under 35 U.S.C. § 103 is a legal conclusion based on underlying facts. *Allergan, Inc. v. Sandoz Inc.*, 726 F.3d 1286, 1290 (Fed. Cir. 2013). Zimmer has the burden to prove invalidity by clear and convincing evidence. *Galderma Labs., L.P. v. Tolmar, Inc.*, 737 F.3d 731, 736 (Fed. Cir. 2013).

On the issues of infringement and validity that the jury decided, Zimmer appeals the district court's denials of its motion for JMOL. Generally, a district court grants JMOL and sets aside the jury's verdict if it "finds that a reasonable jury would not have a legally sufficient evidentiary basis to find for the party on that issue." Fed. R. Civ. P. 50(a). We apply the law of the regional circuit to our review of the district court's grant or denial of a motion for JMOL. *ClearValue, Inc. v. Pearl River Polymers, Inc.*, 668 F.3d 1340, 1343 (Fed. Cir. 2012). The Sixth Circuit reviews the district court's decision on a motion for JMOL *de novo*. *Barnes v. City of Cincinnati*, 401 F.3d 729, 736 (6th Cir. 2005). "Judgment as a matter of law may only be granted if, when viewing the evidence in a light most favorable to the non-moving party, giving that party the benefit of all reasonable inferences, there is no genuine issue of material fact for the jury, and reasonable minds could come to but one conclusion in favor of the moving party." *Id.*

*Appendix B*

For the reasons stated below, we affirm the district court's judgment on the various defenses of non-infringement and invalidity that Zimmer raises across the three asserted patents. However, we also find that each of these defenses was not unreasonable.

The '329 Patent

The only asserted claim of the '329 patent, claim 2, describes features of a "pulsed irrigation surgical handpiece." According to this claim, the handpiece comprises a "hollow housing," which includes a "handle," and, in relevant part in this case, "an electric motor spaced between the top and bottom of said *handle* and located *in said handle*" adjacent to an irrigation tube within the housing. '329 patent col. 22 ll. 5-7 (emphases added). Zimmer contends that this limitation is critical for the purposes of infringement because, as indicated by the arrows below, the motor in its accused Pulsavac Plus device is not located in the handle—rather, it is located in the "nub" of the handpiece, the protrusion behind the barrel.

Appellees' Br. 11 (red arrows added).

*Appendix B*

During claim construction, Zimmer took the position that no construction was necessary and that the claim term "handle" could be understood as having its plain and ordinary meaning to a person of ordinary skill in the art. *Stryker Corp. v. Zimmer, Inc.*, No. 10-1223, 2012 U.S. Dist. LEXIS 12329, *12 (W.D. Mich. Feb. 1, 2012), ECF No. 106 ("*Claim Construction Order*"). Stryker proposed to construe the term "handle" as "a portion of a device designed to be held by a hand or hands." *Id.* The district court adopted Stryker's proposed construction.

Stryker argued that nothing in the patent's specification otherwise limited the meaning of "handle," and that its definition for "handle" was consistent with general dictionaries. Zimmer argued that Stryker's express construction of the term, however, was too broad and read out the specification's consistent distinction between the "handle" and "barrel" portions of the claimed device.

The '329 patent generally describes various embodiments, all of which comprise a "hand-held housing having a handle and a barrel which extends from the upper end of the handle." '329 patent col. 3 ll. 28-31. Zimmer further supported its position with the language of claim 4, which depends on claim 2. Claim 4 separately describes both a "handle" and a "barrel," which Zimmer argued meant that the patentee maintained the distinction between the two parts of the handpiece.

However, the district court ultimately agreed with the Stryker that a device that met claim 2 did not need to have a discrete barrel joined to the handle, since this

claim could cover wand-shaped devices that existed in the prior art in which the entire handpiece functioned like a handle and no separate barrel was joined at an angle. The district court reasoned that since claim 4 is a dependent claim, it could cover the pistol-shaped design described in the specification, while claim 2 would more broadly cover wand-shaped devices as well.

On appeal, Zimmer also raises the prosecution history of U.S. Patent Application No. 08/559,133 ("'133 application"), the parent of the application that issued as the '329 patent. During the '133 application's prosecution, Stryker sought to overcome a rejection of claim 39 based on a prior art reference which described a pistol-shaped device with a barrel and a handle. Stryker traversed the rejection by arguing that the motor of the prior art handpiece was "not in the handle or at an angle to the barrel." Zimmer contends that claim 39 included the limitation "locating said motor in said handle," which is the same as the one at issue in the construction of "handle" in claim 2 of the '329 patent. Therefore, Zimmer argues, Stryker's statement disclaimed designs in which the motor is located in the barrel or nub of a pistol-shaped handpiece. *See Gemalto S.A. v. HTC Corp.*, 754 F.3d 1364, 1371 (Fed. Cir. 2014) ("[W]hen multiple patents derive from the same initial application, the prosecution history regarding a claim limitation in any patent that has issued applies with equal force to subsequently issued patents that contain the same claim limitation."); *Microsoft Corp. v. Multi-Tech Sys., Inc.*, 357 F.3d 1340, 1349 (Fed. Cir. 2004); *Elkay Mfg. Co. v. EBCO Mfg. Co.*, 192 F.3d 973, 980 (Fed. Cir. 1999).

*Appendix B*

Zimmer did not raise its prosecution history argument during its claim construction briefing and the *Markman* hearing before the district court. The district court indicated that it would not alter the claim construction but, nevertheless, determined that it would still consider this argument in deciding Zimmer's motion for summary judgment of non-infringement. *Stryker Corp. v. Zimmer, Inc.*, No. 10-1223, 2012 U.S. Dist. LEXIS 184385, *2 (W.D. Mich. Nov. 29, 2012), ECF No. 248 ("*Summary Judgment Order I*"). The district court nevertheless denied Zimmer's motion, finding that the prosecution disclaimer was insufficiently "clear and unmistakable" because claim 39 of the '133 application had additional limitations that were absent in claim 2 of the '329 patent. *Id.* at 4-5.

The district court's analysis was flawed, however, because this was not a case in which the "purported disclaimers are directed to specific claim terms that have been omitted or materially altered in subsequent applications (rather than to the invention itself)." *Saunders Grp., Inc. v. Comfortrac, Inc.*, 492 F.3d 1326, 1333 (Fed. Cir. 2007).[1] There was no difference in the language

1. The limitation at issue in the original claim 39 of the '133 application was, in full: "a handpiece housing containing said pump and shell, said handpiece housing being elongate [sic] and bent and comprising a handle and a barrel, said barrel being open to and extending forward from an intersection with the top of the handle at an angle thereto, said hollow shell extending lengthwise along and within said handle into said angled intersection of said handle and barrel and *locating said motor in said handle remote from said angled intersection*, said link extending at said angle

describing the limitations as between the two claims at issue, rather, the limitation of claim 2 was included within claim 39. There is no reason why a disclaimer on a limitation within a narrower claim would not apply to the identical limitation within the broader claim, as the same concerns about the prior art would relate to both. *See, e.g.*, *Gemalto*, 754 F.3d at 1371 (applying a common disclaimer to both an independent and narrower dependent claim containing the same term).[2] That said, the district court did not err in rejecting Zimmer's argument as it related to claim construction, while still entertaining it in the context of infringement. *See SuperGuide Corp. v. DirecTV Enters., Inc.*, 358 F.3d 870, 889-90 (Fed. Cir. 2004) (affirming the district court's construction on the grounds that a proffered alternative construction was untimely raised). Therefore, we review Zimmer's argument only as it relates to infringement.

---

from said shell and handle forwardly into and along the length direction of said barrel, said pump movable member extending along the length direction of said barrel and being reciprocatingly driven by said link in said length direction of said barrel." J.A. 16672 (emphasis added).

2. This is unlike the case cited by Stryker and the district court for the contrary proposition, *Middleton, Inc. v. Minnesota Mining and Manufacturing. Co.*, 311 F.3d 1384, 1388-89 (Fed. Cir. 2002), in which the term at issue, "uniform" in the context of floor coverings, would potentially have a different meaning if it applied to the narrower claim—limited to smooth sporting surfaces—and a subsequent, broader claim that contemplated other kinds of surfaces. Here, a limitation on the location of the motor within the handpiece would mean the same thing in the context of either claim.

*Appendix B*

Infringement is a question of fact, and we must give a substantial degree of deference to the jury's verdict. At trial, Stryker presented evidence indicating that a medical professional could hold Zimmer's Pulsavac Plus by the nub behind the barrel, where the motor was located. In addition, Stryker presented evidence that the barrel of the Pulsavac Plus was called a "barrel grip" in an associated patent application, and the barrel included indentations that would allow the device to be used while held by the barrel. Stryker also persuaded the jury that it was reasonable to infer that if the nub behind the barrel was also shaped such that it was at least *capable* of being held, then it would be "a portion of the device designed to be held by hand," in accordance with the district court's construction of "handle" in the claim at issue. In light of the evidence presented at trial as a whole, along with the prosecution history, we do not find that "reasonable minds could come to but one conclusion" that Zimmer did not infringe claim 2 of the '329 patent. *Barnes*, 401 F.3d at 736. Accordingly, we affirm, though Zimmer's claim construction and non-infringement positions were not unreasonable.

The '807 Patent

Infringement

Zimmer argues that the district court erred in granting summary judgment of infringement of the '807 patent's asserted claims. We review the district court's grant of summary judgment *de novo*. *Dixon v. Univ. of Toledo*, 702 F.3d 269, 273 (6th Cir. 2012). "Summary

judgment is proper where there exists no issue of material fact and the moving party is entitled to judgment as a matter of law." *ETW Corp. v. Jireh Publ'g, Inc.*, 332 F.3d 915, 920 (6th Cir. 2003) (citing Fed. R. Civ. P. 56(c)). All reasonable factual inferences are drawn in favor of the nonmoving party. *Id.*

Zimmer's argument on appeal centers on whether its products include, as required for all the asserted claims, "a front end for *receiving* the discharge tube and the suction tube." '807 patent col. 27 ll. 35-37 (emphasis added).[3] This limitation describes the interface between the nozzles at the front end of the handpiece and the nozzles of a removable tip that includes discharge and suction tubes. Zimmer argues that the claim language requires that there be male openings on the tip that fit into the female nozzles on the handpiece. Therefore, Zimmer contends that the accused devices do not infringe because they are designed with female openings on the tip that fit into tapered male nozzles on the handpiece. To support its position, Zimmer relies on various dictionary definitions of "receive," which it argues all have some variant of the verbs "to contain" or "to hold." *See* Appellants' Br. 57. Zimmer argues that this meaning is consistent with the specification, which discloses a single embodiment in which the neck of the suction tube "seats in" the drain tube—and, specifically, that this configuration is designed to avoid "leakage of the fluid and material as it flows in the drain tube." '807 patent col. 11 ll. 29-34; *see also* Figure 8.

---

3. Stryker asserted claim 45 and certain of its dependent claims.

*Appendix B*

As an initial matter, Stryker's argument that Zimmer waived a narrower construction of the term "receive" is unavailing. The parties and the district court directly addressed this issue during the summary judgment proceedings. Moreover, unlike the dispute concerning the meaning of "handle" in the '329 patent, the district court did not note any waiver and expressly considered the scope of "receive" in evaluating whether Zimmer's design infringed. *See Pfizer, Inc. v. Teva Pharms., USA, Inc.*, 429 F.3d 1364, 1377 (Fed. Cir. 2005) (contemplating "rolling claim construction, in which the court revisits and alters its interpretation of the claim terms as its understanding of the technology evolves").

Stryker further argues that the specification provides a broader disclosure of "an irrigation handpiece to which complementary tips can be readily *coupled*." '807 patent col. 1 ll. 10-12 (emphasis added); *see also* col. 2 ll. 45-47 (disclosing "a tip assembly [that] readily *seals* to a complementary handpiece") (emphasis added). Stryker also points to Zimmer's own lay witnesses, who admitted that its Pulsavac Plus handpiece "receives" the tips.[4]

---

4. Stryker also argues that Zimmer's invalidity argument relies on the prior art Var-A-Pulse device including the "receive" limitation—even though it has the same kind of tip assembly as the Pulsavac Plus. We note, however, that nothing precludes Zimmer from arguing for a narrower application of the limitation on the infringement context, while also arguing, in the alternative, that—if the district court were to disagree—the patent claim would be so broad as to be invalid.

The district court noted that, in its view, "Zimmer's reading of 'receive' is artificially narrow." *Stryker Corp. v. Zimmer, Inc.*, No. 10-1223, 2012 U.S. Dist. LEXIS 184383, *15 (W.D. Mich. Nov. 29, 2012), ECF No. 247 ("*Summary Judgment Order II*"). Instead, the district court reasoned that "[t]he word "receives" in this context can only mean that one part of the device connects directly with another part of the device." *Id.* Thus, the district court found that Zimmer infringed. While it is a close case, we do not find that the district court erred in granting summary judgment of infringement based on the record before it.

Invalidity

Zimmer also appeals the district court's holding that the asserted claims of the '807 patent were anticipated by its prior art Var-A-Pulse device, the predecessor of the Pulsavac Plus. Stryker argues that the Var-A-Pulse device does not anticipate because it is missing the "lock assembly" limitation of the asserted claims, which require that there be "a lock assembly mounted to the front end of said body for releasably securing the discharge tube and the suction tube to said body." '807 patent col. 27 ll. 35-37. The district court adopted Stryker's proposed construction of the term "lock assembly" as "components that work together to secure or fasten the tip to the hand-piece." *Claim Construction Order* at 16. In the Var-A-Pulse device, the tip was attached to the handpiece in such a way that the tip nozzles fit into interior housing grooves at the front of the handpiece, which were then held together by friction. Zimmer argues that under the district court's construction, the limitation was present in the prior art

because the nozzles were "secured or fastened" when they were fit in the interior housing groove.

At trial, Zimmer presented evidence that included the Var-A-Pulse's technical documentation, which indicated that the tip should be "secured" to the handpiece, as well as testimony from various Stryker witnesses admitting that the tip nozzles were fastened to the handpiece when they were inserted. Stryker argued that, unlike the accused Pulsavac Plus devices, which include a locking ring to secure the tip, there is no separate part or assembly in the Var-A-Pulse. Stryker also contended the prior art device did not include the full claim limitation, which requires that the lock assembly be "mounted" to the front end of handpiece. Stryker argued that because Zimmer identified a "lock assembly" that itself included the housing groove that is part of the front end, Zimmer was essentially arguing that the lock assembly was mounted to itself, thus nullifying the limitation. Stryker also presented evidence to the jury showing that the Var-A-Pulse tips readily fell off the front end of the handpiece, and that this led the development of the locking ring in the Pulsavac Pulse.

The jury ultimately found that there was no clear and convincing evidence that the Var-A-Pulse device anticipated the '807 patent's asserted claims. In light of the evidence that was presented, we find that a reasonable jury could have reached this verdict. Accordingly, we affirm.

*Appendix B*

The '383 Patent

At trial, Zimmer argued that the asserted claims of the '383 patent were obvious at the time of the invention in light of U.S. Patent No. 5,046,486 ("Grulke"), U.S. Patent No. 4,817,599 ("Drews II"), and U.S. Patent No. 5,350,356 ("Bales"). Zimmer contends that all of the limitations of the '383 patent's asserted claims were collectively present in the prior art references. Stryker does not directly dispute this point. Instead, it principally argues that because the designs claimed by Grulke and Drews II each exclude certain components described in the claims, one of ordinary skill in the art would not have been motivated to combine these references. In brief, Grulke disclosed a pulsed lavage system that uses a pneumatic, rather than an electric, motor. Drews II disclosed a pulsed irrigation system, powered by an electric motor, that is used as an eye wash.

At trial, Zimmer argued that it would have been obvious to one of ordinary skill to try to replace the pneumatic motor of Grulke with the electric motor in Drews II. Zimmer further argued that any reconfiguration of Grulke to accommodate an electric motor could be done by one of ordinary skill. *See In re ICON Health & Fitness, Inc.*, 496 F.3d 1374, 1382 (Fed. Cir. 2007) ("[W]e do not ignore the modifications that one skilled in the art would make to a device borrowed from the prior art."). Zimmer also argued that even though the Grulke reference was directed to orthopedic pulsed lavage systems, and the Drews II reference was directed to eyewash systems, they both described pressured water irrigation in hospitals and

clinics. Zimmer contended that that a person of ordinary skill in the art of pulsed lavage devices would thus be aware of the art in both fields and would be motivated to combine features from each of them. *See KSR Int'l Co. v. Teleflex Inc.*, 550 U.S. 398, 420, 127 S. Ct. 1727, 167 L. Ed. 2d 705 (2007) ("Common sense teaches, however, that familiar items may have obvious uses beyond their primary purposes, and in many cases a person of ordinary skill will be able to fit the teachings of multiple patents together like pieces of a puzzle.").

Zimmer also presented evidence of the examiner's rejection of certain claims in Stryker's prosecution of U.S. Patent Application No. 11/563,504 ("'504 application"), a continuation of the '383 patent, which occurred during the discovery phase of this case. During that patent application's prosecution, the examiner issued a non-final office action, rejecting certain claims of the '504 application as obvious over Grulke "and further in view of Drews II." J.A. 17226. Stryker did not attempt to traverse the rejection and instead ultimately abandoned the application. Stryker principally argued that because the claim at issue in the '504 application included certain different limitations, the examiner's rejection did not have any relevance to the '383 patent's claims. We note, however, that the difference in the detail of the claims is immaterial as to whether it would have been obvious to combine Grulke and Drews II. While persuasive, the examiner's proffered rejection is not on its own dispositive, in large part because the U.S. Patent and Trademark Office ("PTO") and district courts "take different approaches in determining invalidity and on the same evidence could

quite correctly come to different conclusions." *Ethicon, Inc. v. Quigg*, 849 F.2d 1422, 1428 (Fed. Cir. 1988).

Stryker also argued that the Grulke device differed substantially from the Drews II device. For example, it was designed for surgery rather than eyewashing. Grulke also disclosed a large device that was wheeled into an operating room that had many components that differed from those in the portable device disclosed Drews II. Stryker presented expert testimony rebutting Zimmer's evidence that it would have been obvious to combine these references.

On the basis of the record presented at trial, we agree with the district court that a reasonable jury could conclude that one of ordinary skill in the art would not have been motivated to combine the Grulke and Drews II references, even in light of the examiner's rejection of related claims on the basis of this combination. This is sufficient to affirm the district court's determination that Zimmer did not show, by clear and convincing evidence, that the '383 patent's claims were obvious.

For this reason, we need not reach other issues, including the evidence of secondary considerations of non-obviousness. Therefore, we affirm the district court's determination that the '383 patent's asserted claims were not obvious over the combination of Grulke, Drews II, and Bales.[5]

---

5. Zimmer also appeals the jury's finding that Stryker's products were sufficiently marked by the '383 patent during part

*Appendix B*

III

Willful Infringement

To establish willful infringement, the patentee has the burden of showing "by clear and convincing evidence that the infringer acted despite an objectively high likelihood that its actions constituted infringement of a valid patent." *In re Seagate Tech., LLC*, 497 F.3d 1360, 1371 (Fed. Cir. 2007) (*en banc*). "The state of mind of the accused infringer is not relevant to this objective inquiry." *Id.* Only if the patentee establishes this "threshold objective standard" does the inquiry then move on to whether "this objectively-

---

of the period for which it sought damages. We need not reach this issue, because we affirm the finding that Zimmer infringed the '807 and '329 patents, which is sufficient to support all of Stryker's award of damages for lost profit. However, we note that the jury was indeed incorrectly instructed that it should consider "whether some portion of the Stryker products not marked with a particular patent number were marked with other *related patent* notices." *Stryker Corp. v. Zimmer, Inc.*, No. 10-1223, 2013 U.S. Dist. LEXIS 171817, *32 (W.D. Mich. Aug. 7, 2013), ECF No. 537 ("*Post-Verdict Order*") (emphasis added). Because of this instruction, the jury could have been misled to consider a product marked with the number of a patent related to the '383 patent—but not with the '383 patent number itself—as being sufficiently marked. While the district court appears to have relied on cases that suggest that there is some flexibility in what constitutes sufficient marking, the statute is not so broad as to allow marking with a different patent—with different claims—to provide sufficient notice to the public. Rather, the plain language of the marking statute provides that the patented article be marked with the "number of *the* patent." 35 U.S.C § 287(a) (emphasis added).

defined risk (determined by the record developed in the infringement proceeding) was either known or so obvious that it should have been known to the accused infringer." *Id.* We have held that objective recklessness, even though "predicated on underlying mixed questions of law and fact, is best decided by the judge as a question of law subject to *de novo* review."[6] *Bard Peripheral Vascular, Inc. v. W.L. Gore & Assocs., Inc.*, 682 F.3d 1003, 1007 (Fed. Cir. 2012). Objective recklessness will not be found where the accused infringer's "position is susceptible to a reasonable conclusion of no infringement." *Uniloc USA, Inc. v. Microsoft Corp.*, 632 F.3d 1292, 1310 (Fed. Cir. 2011).

The district court failed to undertake an objective assessment of Zimmer's specific defenses to Stryker's claims. Instead, the district court's analysis of objective reasonableness summarily asserted that the "jury heard testimony" that Zimmer "all but instructed its design team to copy Stryker's products." *Post-Verdict Order*, 2013 U.S. Dist. LEXIS 171817 at *40. The district court further concluded that the "pioneering" nature of Stryker's inventions and the secondary considerations of

---

6. This court has not yet addressed whether *Octane Fitness, LLC v. ICON Health & Fitness, Inc.*, 134 S. Ct. 1749, 188 L. Ed. 2d 816 (2014), or *Highmark Inc. v. Allcare Health Mgmt. Sys., Inc.*, 134 S. Ct. 1744, 1746, 188 L. Ed. 2d 829 (2014), altered the standard of review under which this court analyzes the objective prong of willfulness. However, as the district court failed to undertake any objective assessment of Zimmer's specific defenses, the district court erred under any standard of review and thus this court need not now address what standard of review is proper regarding the objective prong of willfulness.

non-obviousness "made it dramatically less likely that Zimmer's invalidity arguments were reasonable." *Id.*

An objective assessment of the case shows that Zimmer presented reasonable defenses to all of the asserted claims of Stryker's patents.

First, with respect to the '329 patent, the motor in the Zimmer's Pulsavac Plus is located in the nub at the rear of the barrel of its pistol-shaped device. Stryker's infringement case relied on first persuading the district court to broadly construe the claim term "handle" to include the barrel of a pistol-shaped device—even though the patent specification only describes the handle and barrel separately. Then, Stryker had to persuade the jury that the barrel nub was a part of the device "designed to be held by hand," even in light of prosecution history in which Stryker distinguished between the location of the motor in the handle as opposed to the barrel. Though Stryker ultimately prevailed, Zimmer's arguments were not unreasonably founded on the plain meaning of "handle" in the context of a pistol-shaped device, the specification's exclusive disclosure of pistol-shaped devices, and the prosecution history—all on which it could have relied to provide notice of what the patent claims covered.

Second, with respect to the '807 patent, the specification only disclosed female nozzles on the front end of the device and male nozzles on the removable tip, which would be consistent with the claim requiring that the front end "receive" the tip. Zimmer's devices had the exact opposite configuration: tapered male nozzles on the front end and

female nozzles on the tip. Furthermore, the prior art Var-A-Pulse devices included all of the asserted claims' limitations except one. In light of the district court's claim construction, Stryker's defense to Zimmer's argument relied on persuading the jury that even though the tip's nozzles could fit into the handpiece and be held in place through friction with internal housing grooves, that did not mean they were "secured or fastened." Again, though Stryker prevailed, Zimmer's defenses were not unreasonable.

Third, with respect to the '383 patent, Zimmer's obviousness argument relied on a combination of references that was also raised by a PTO examiner during Stryker's prosecution of a related patent application—in an office action that occurred during discovery in this litigation. Zimmer's reliance on this combination was not without reason, in particular since the references related to pressured water irrigation systems used in hospitals and clinics. Therefore, even if Zimmer's defenses failed at trial, it still made a reasonable case that the '383 patent's asserted claims were obvious and thus invalid.

In sum, we find that Zimmer's defenses to the infringement of each patent claim that Stryker asserted were not objectively unreasonable, and, therefore, it did not act recklessly.

Attorneys' Fees

As the court reversed the district court's determination of willful infringement, and the district court's award of

attorneys' fees was based on that determination, we vacate the district court's grant of attorneys' fees. However, because there exist further allegations of litigation misconduct in this case and because the standard for finding an exceptional case has changed since the district court issued its finding regarding attorneys' fees, we remand this issue for further consideration by the district court.

## IV

For the aforementioned reasons, we affirm the jury's verdict of infringement and validity of all three patents at issue, as well as its award of lost profits. However, we reverse the district court's determination of willful infringement and thus vacate its award of trebled damages. We also vacate and remand the district court's finding of an exceptional case and its award of attorneys' fees. The case is remanded for further proceedings consistent with this opinion.

**AFFIRMED-IN-PART, REVERSED-IN-PART, VACATED-IN-PART, AND REMANDED**

## APPENDIX C — OPINION OF THE UNITED STATES COURT OF APPEALS FOR THE FEDERAL CIRCUIT, FILED DECEMBER 19, 2014

UNITED STATES COURT OF APPEALS
FOR THE FEDERAL CIRCUIT

2013-1668

STRYKER CORPORATION, STRYKER PUERTO RICO, LTD., AND STRYKER SALES CORPORATION,

*Plaintiffs-Appellees,*

v.

ZIMMER, INC. AND ZIMMER SURGICAL, INC.,

*Defendants-Appellants,*

and

ZIMMER ORTHOPAEDIC SURGICAL PRODUCTS,

*Defendant.*

Appeal from the United States District Court for the Western District of Michigan in No. 10-CV-1223, Judge Robert J. Jonker

Decided: December 19, 2014

Before PROST, *Chief Judge*, NEWMAN and HUGHES, *Circuit Judges.*

PROST, *Chief Judge.*

*Appendix C*

Zimmer, Inc., Zimmer Surgical, Inc., and Zimmer Orthopaedic Surgical Products (collectively "Zimmer") appeal from the final judgment of the United States District Court for the Western District of Michigan that U.S. Patent Nos. 6,022,329 ("'329 patent"), 6,179,807 ("'807 patent"), and 7,144,383 ("'383 patent") were valid and willfully infringed. For the reasons stated below, we affirm the jury's findings that the patents were valid and infringed, and the jury's award of damages to plaintiff-appellees Stryker Corporation, Stryker Puerto Rico, Ltd., and Stryker Sales Corporation (collectively "Stryker"). However, we reverse the district court's judgment that Zimmer's infringement was willful, and, accordingly, we vacate its award of treble damages. Finally, we vacate and remand the district court's finding of exceptional case and its award of attorneys' fees.

I

The patents at issue concern pulsed lavage devices. Pulsed lavage devices deliver pressurized irrigation for certain medical therapies, including orthopedic procedures and cleaning wounds. The particular devices at issue in this case are portable, battery powered, and handheld. They include both suction and discharge tubes, so they both spray fluid from an external source and also suction off fluid and debris. These devices represent an improvement over older pulsed lavage systems that required a central power source and external mechanical pumps, which meant that they needed to be wheeled around the hospital.

*Appendix C*

Stryker and Zimmer are the two main competitors in the orthopedic pulsed lavage device market. Stryker began bringing battery-powered, handheld pulsed lavage devices to the marketplace in 1993. That same year, Stryker filed the application which eventually gave rise to the patents at issue. In February 2000, the first of these patents, the '329 patent, issued. Later that year Stryker sued another manufacturer, Davol Inc., for infringement. That suit settled in 2001, and Davol took a license on the '329 patent. The '807 patent subsequently issued in January 2001, and the '383 patent issued in December 2006.

Zimmer introduced its first portable pulsed lavage device, the Var-A-Pulse, in 1996. In 1998, Zimmer began to develop a new design, which came to market soon thereafter as the Pulsavac Plus range of products. Zimmer's Pulsavac Plus products achieved a peak of $55 million in annual sales in late 2007, before they were withdrawn from the marketplace due to a product recall, after which sales resumed in December 2008.

In 2010, Stryker sued Zimmer, alleging that Zimmer's Pulsavac Plus devices infringed various claims of the '329, '807, and '383 patents. The district court granted partial summary judgment in favor of Stryker, finding infringement of the '807 and '383 patents' asserted claims. The question of whether Zimmer infringed the single asserted claim of the '329 patent, as well as Zimmer's invalidity defenses against all of the asserted claims, went to trial. The jury found that the products infringed claim 2 of the '329 patent and that all the asserted claims were valid. The jury also awarded $70 million in lost profits.

It further found that Zimmer had willfully infringed all three patents. The jury also found that Stryker had marked substantially all of its products that commercially embodied the patents in suit during the period it sought damages, pursuant to 35 U.S.C. § 287(a).

In August 2013, the district court issued an order rejecting Zimmer's motions for judgment as a matter of law ("JMOL") on various issues, affirming the jury's verdict, awarding trebled damages for willful infringement, finding an exceptional case and thus awarding attorneys' fees to Stryker, and imposing a permanent injunction. The district court subsequently entered final judgment pursuant to its order.

Zimmer appeals. We have jurisdiction under 28 U.S.C. § 1295(a)(1).

## II

We turn first to Zimmer's appeal on the issues of claim construction, infringement, and validity.

Claim construction is an issue of law that we review de novo. *Lighting Ballast Control LLC v. Philips Elecs. N. Am. Corp.*, 744 F.3d 1272, 1276-77 (Fed. Cir. 2014) (en banc). In construing a claim term, we look at the term's plain and ordinary meaning as understood by a person of ordinary skill in the art. *Phillips v. AWH Corp.*, 415 F.3d 1303, 1313 (Fed. Cir. 2005) (en banc). There is an exception to this general rule when a patentee sets out a definition and acts as her own lexicographer. *Thorner v.*

*Sony Computer Entm't Am., LLC*, 669 F.3d 1362, 1365 (Fed. Cir. 2012). Infringement is a question of fact. *Lucent Techs., Inc. v. Gateway, Inc.*, 580 F.3d 1301, 1309 (Fed. Cir. 2009). Invalidity by reason of anticipation under 35 U.S.C. § 102 is a question of fact. *Atlas Powder Co. v. Ireco, Inc.*, 190 F.3d 1342, 1346 (Fed. Cir. 1999). Invalidity by reason of obviousness under 35 U.S.C. § 103 is a legal conclusion based on underlying facts. *Allergan, Inc. v. Sandoz Inc.*, 726 F.3d 1286, 1290 (Fed. Cir. 2013). Zimmer has the burden to prove invalidity by clear and convincing evidence. *Galderma Labs., L.P. v. Tolmar, Inc.*, 737 F.3d 731, 736 (Fed. Cir. 2013).

On the issues of infringement and validity that the jury decided, Zimmer appeals the district court's denials of its motion for JMOL. Generally, a district court grants JMOL and sets aside the jury's verdict if it "finds that a reasonable jury would not have a legally sufficient evidentiary basis to find for the party on that issue." Fed. R. Civ. P. 50(a). We apply the law of the regional circuit to our review of the district court's grant or denial of a motion for JMOL. *ClearValue, Inc. v. Pearl River Polymers, Inc.*, 668 F.3d 1340, 1343 (Fed. Cir. 2012). The Sixth Circuit reviews the district court's decision on a motion for JMOL de novo. *Barnes v. City of Cincinnati*, 401 F.3d 729, 736 (6th Cir. 2005). "Judgment as a matter of law may only be granted if, when viewing the evidence in a light most favorable to the non-moving party, giving that party the benefit of all reasonable inferences, there is no genuine issue of material fact for the jury, and reasonable minds could come to but one conclusion in favor of the moving party." *Id.*

*Appendix C*

For the reasons stated below, we affirm the district court's judgment on the various defenses of non-infringement and invalidity that Zimmer raises across the three asserted patents. However, we also find that each of these defenses was not unreasonable.

The '329 Patent

The only asserted claim of the '329 patent, claim 2, describes features of a "pulsed irrigation surgical handpiece." According to this claim, the handpiece comprises a "hollow housing," which includes a "handle," and, in relevant part in this case, "an electric motor spaced between the top and bottom of said *handle* and located *in said handle*" adjacent to an irrigation tube within the housing. '329 patent col. 22 ll. 5-7 (emphases added). Zimmer contends that this limitation is critical for the purposes of infringement because, as indicated by the arrows below, the motor in its accused Pulsavac Plus device is not located in the handle—rather, it is located in the "nub" of the handpiece, the protrusion behind the barrel.

Appellees' Br. 11 (red arrows added).

*Appendix C*

During claim construction, Zimmer took the position that no construction was necessary and that the claim term "handle" could be understood as having its plain and ordinary meaning to a person of ordinary skill in the art. *Stryker Corp. v. Zimmer, Inc.*, No. 10-1223, 2012 U.S. Dist. LEXIS 12329, *12 (W.D. Mich. Feb. 1, 2012), ECF No. 106 ("*Claim Construction Order*"). Stryker proposed to construe the term "handle" as "a portion of a device designed to be held by a hand or hands." *Id.* The district court adopted Stryker's proposed construction.

Stryker argued that nothing in the patent's specification otherwise limited the meaning of "handle," and that its definition for "handle" was consistent with general dictionaries. Zimmer argued that Stryker's express construction of the term, however, was too broad and read out the specification's consistent distinction between the "handle" and "barrel" portions of the claimed device.

The '329 patent generally describes various embodiments, all of which comprise a "hand-held housing having a handle and a barrel which extends from the upper end of the handle." '329 patent col. 3 ll. 28-31. Zimmer further supported its position with the language of claim 4, which depends on claim 2. Claim 4 separately describes both a "handle" and a "barrel," which Zimmer argued meant that the patentee maintained the distinction between the two parts of the handpiece.

However, the district court ultimately agreed with the Stryker that a device that met claim 2 did not need to have a discrete barrel joined to the handle, since this

claim could cover wand-shaped devices that existed in the prior art in which the entire handpiece functioned like a handle and no separate barrel was joined at an angle. The district court reasoned that since claim 4 is a dependent claim, it could cover the pistol-shaped design described in the specification, while claim 2 would more broadly cover wand-shaped devices as well.

On appeal, Zimmer also raises the prosecution history of U.S. Patent Application No. 08/559,133 ("'133 application"), the parent of the application that issued as the '329 patent. During the '133 application's prosecution, Stryker sought to overcome a rejection of claim 39 based on a prior art reference which described a pistol-shaped device with a barrel and a handle. Stryker traversed the rejection by arguing that the motor of the prior art handpiece was "not in the handle or at an angle to the barrel." Zimmer contends that claim 39 included the limitation "locating said motor in said handle," which is the same as the one at issue in the construction of "handle" in claim 2 of the '329 patent. Therefore, Zimmer argues, Stryker's statement disclaimed designs in which the motor is located in the barrel or nub of a pistol-shaped handpiece. *See Gemalto S.A. v. HTC Corp.*, 754 F.3d 1364, 1371 (Fed. Cir. 2014) ("[W]hen multiple patents derive from the same initial application, the prosecution history regarding a claim limitation in any patent that has issued applies with equal force to subsequently issued patents that contain the same claim limitation."); *Microsoft Corp. v. Multi-Tech Sys., Inc.*, 357 F.3d 1340, 1349 (Fed. Cir. 2004); *Elkay Mfg. Co. v. EBCO Mfg. Co.*, 192 F.3d 973, 980 (Fed. Cir. 1999).

*Appendix C*

Zimmer did not raise its prosecution history argument during its claim construction briefing and the *Markman* hearing before the district court. The district court indicated that it would not alter the claim construction but, nevertheless, determined that it would still consider this argument in deciding Zimmer's motion for summary judgment of non-infringement. *Stryker Corp. v. Zimmer, Inc.*, No. 10-1223, 2012 U.S. Dist. LEXIS 184385, *2 (W.D. Mich. Nov. 29, 2012), ECF No. 248 ("*Summary Judgment Order I*"). The district court nevertheless denied Zimmer's motion, finding that the prosecution disclaimer was insufficiently "clear and unmistakable" because claim 39 of the '133 application had additional limitations that were absent in claim 2 of the '329 patent. *Id.* at 4-5.

The district court's analysis was flawed, however, because this was not a case in which the "purported disclaimers are directed to specific claim terms that have been omitted or materially altered in subsequent applications (rather than to the invention itself)." *Saunders Grp., Inc. v. Comfortrac, Inc.*, 492 F.3d 1326, 1333 (Fed. Cir. 2007).[1] There was no difference in the language

1. The limitation at issue in the original claim 39 of the '133 application was, in full: "a handpiece housing containing said pump and shell, said handpiece housing being elongate [sic] and bent and comprising a handle and a barrel, said barrel being open to and extending forward from an intersection with the top of the handle at an angle thereto, said hollow shell extending lengthwise along and within said handle into said angled intersection of said handle and barrel and *locating said motor in said handle remote from said angled intersection*, said link extending at said angle

describing the limitations as between the two claims at issue, rather, the limitation of claim 2 was included within claim 39. There is no reason why a disclaimer on a limitation within a narrower claim would not apply to the identical limitation within the broader claim, as the same concerns about the prior art would relate to both. *See, e.g.*, *Gemalto*, 754 F.3d at 1371 (applying a common disclaimer to both an independent and narrower dependent claim containing the same term).[2] That said, the district court did not err in rejecting Zimmer's argument as it related to claim construction, while still entertaining it in the context of infringement. *See SuperGuide Corp. v. DirecTV Enters., Inc.*, 358 F.3d 870, 889-90 (Fed. Cir. 2004) (affirming the district court's construction on the grounds that a proffered alternative construction was untimely raised). Therefore, we review Zimmer's argument only as it relates to infringement.

---

from said shell and handle forwardly into and along the length direction of said barrel, said pump movable member extending along the length direction of said barrel and being reciprocatingly driven by said link in said length direction of said barrel." J.A. 16672 (emphasis added).

2. This is unlike the case cited by Stryker and the district court for the contrary proposition, *Middleton, Inc. v. Minnesota Mining and Manufacturing Co.*, 311 F.3d 1384, 1388-89 (Fed. Cir. 2002), in which the term at issue, "uniform" in the context of floor coverings, would potentially have a different meaning if it applied to the narrower claim—limited to smooth sporting surfaces—and a subsequent, broader claim that contemplated other kinds of surfaces. Here, a limitation on the location of the motor within the handpiece would mean the same thing in the context of either claim.

*Appendix C*

Infringement is a question of fact, and we must give a substantial degree of deference to the jury's verdict. At trial, Stryker presented evidence indicating that a medical professional could hold Zimmer's Pulsavac Plus by the nub behind the barrel, where the motor was located. In addition, Stryker presented evidence that the barrel of the Pulsavac Plus was called a "barrel grip" in an associated patent application, and the barrel included indentations that would allow the device to be used while held by the barrel. Stryker also persuaded the jury that it was reasonable to infer that if the nub behind the barrel was also shaped such that it was at least *capable* of being held, then it would be "a portion of the device designed to be held by hand," in accordance with the district court's construction of "handle" in the claim at issue. In light of the evidence presented at trial as a whole, along with the prosecution history, we do not find that "reasonable minds could come to but one conclusion" that Zimmer did not infringe claim 2 of the '329 patent. *Barnes*, 401 F.3d at 736. Accordingly, we affirm, though Zimmer's claim construction and non-infringement positions were not unreasonable.

The '807 Patent

Infringement

Zimmer argues that the district court erred in granting summary judgment of infringement of the '807 patent's asserted claims. We review the district court's grant of summary judgment de novo. *Dixon v. Univ. of Toledo*, 702 F.3d 269, 273 (6th Cir. 2012). "Summary

judgment is proper where there exists no issue of material fact and the moving party is entitled to judgment as a matter of law." *ETW Corp. v. Jireh Publ'g, Inc.*, 332 F.3d 915, 920 (6th Cir. 2003) (citing Fed. R. Civ. P. 56(c)). All reasonable factual inferences are drawn in favor of the nonmoving party. *Id.*

Zimmer's argument on appeal centers on whether its products include, as required for all the asserted claims, "a front end for *receiving* the discharge tube and the suction tube." '807 patent col. 27 ll. 35-37 (emphasis added).[3] This limitation describes the interface between the nozzles at the front end of the handpiece and the nozzles of a removable tip that includes discharge and suction tubes. Zimmer argues that the claim language requires that there be male openings on the tip that fit into the female nozzles on the handpiece. Therefore, Zimmer contends that the accused devices do not infringe because they are designed with female openings on the tip that fit into tapered male nozzles on the handpiece. To support its position, Zimmer relies on various dictionary definitions of "receive," which it argues all have some variant of the verbs "to contain" or "to hold." *See* Appellants' Br. 57. Zimmer argues that this meaning is consistent with the specification, which discloses a single embodiment in which the neck of the suction tube "seats in" the drain tube—and, specifically, that this configuration is designed to avoid "leakage of the fluid and material as it flows in the drain tube." '807 patent col. 11 ll. 29-34; *see also* Figure 8.

---

3. Stryker asserted claim 45 and certain of its dependent claims.

As an initial matter, Stryker's argument that Zimmer waived a narrower construction of the term "receive" is unavailing. The parties and the district court directly addressed this issue during the summary judgment proceedings. Moreover, unlike the dispute concerning the meaning of "handle" in the '329 patent, the district court did not note any waiver and expressly considered the scope of "receive" in evaluating whether Zimmer's design infringed. *See Pfizer, Inc. v. Teva Pharms., USA, Inc.*, 429 F.3d 1364, 1377 (Fed. Cir. 2005) (contemplating "rolling claim construction, in which the court revisits and alters its interpretation of the claim terms as its understanding of the technology evolves").

Stryker further argues that the specification provides a broader disclosure of "an irrigation handpiece to which complementary tips can be readily *coupled*." '807 patent col. 1 ll. 10-12 (emphasis added); *see also* col. 2 ll. 45-47 (disclosing "a tip assembly [that] readily *seals* to a complementary handpiece") (emphasis added). Stryker also points to Zimmer's own lay witnesses, who admitted that its Pulsavac Plus handpiece "receives" the tips.[4]

4. Stryker also argues that Zimmer's invalidity argument relies on the prior art Var-A-Pulse device including the "receive" limitation—even though it has the same kind of tip assembly as the Pulsavac Plus. We note, however, that nothing precludes Zimmer from arguing for a narrower application of the limitation on the infringement context, while also arguing, in the alternative, that—if the district court were to disagree—the patent claim would be so broad as to be invalid.

The district court noted that, in its view, "Zimmer's reading of 'receive' is artificially narrow." *Stryker Corp. v. Zimmer, Inc.*, No. 10-1223, 2012 U.S. Dist. LEXIS 184383, *15 (W.D. Mich. Nov. 29, 2012), ECF No. 247 ("*Summary Judgment Order II*"). Instead, the district court reasoned that "[t]he word "receives" in this context can only mean that one part of the device connects directly with another part of the device." *Id.* Thus, the district court found that Zimmer infringed. While it is a close case, we do not find that the district court erred in granting summary judgment of infringement based on the record before it.

Invalidity

Zimmer also appeals the district court's holding that the asserted claims of the '807 patent were anticipated by its prior art Var-A-Pulse device, the predecessor of the Pulsavac Plus. Stryker argues that the Var-A-Pulse device does not anticipate because it is missing the "lock assembly" limitation of the asserted claims, which require that there be "a lock assembly mounted to the front end of said body for releasably securing the discharge tube and the suction tube to said body." '807 patent col. 27 ll. 35-37. The district court adopted Stryker's proposed construction of the term "lock assembly" as "components that work together to secure or fasten the tip to the hand-piece." *Claim Construction Order* at 16. In the Var-A-Pulse device, the tip was attached to the handpiece in such a way that the tip nozzles fit into interior housing grooves at the front of the handpiece, which were then held together by friction. Zimmer argues that under the district court's construction, the limitation was present in the prior art

because the nozzles were "secured or fastened" when they were fit in the interior housing groove.

At trial, Zimmer presented evidence that included the Var-A-Pulse's technical documentation, which indicated that the tip should be "secured" to the handpiece, as well as testimony from various Stryker witnesses admitting that the tip nozzles were fastened to the handpiece when they were inserted. Stryker argued that, unlike the accused Pulsavac Plus devices, which include a locking ring to secure the tip, there is no separate part or assembly in the Var-A-Pulse. Stryker also contended the prior art device did not include the full claim limitation, which requires that the lock assembly be "mounted" to the front end of handpiece. Stryker argued that because Zimmer identified a "lock assembly" that itself included the housing groove that is part of the front end, Zimmer was essentially arguing that the lock assembly was mounted to itself, thus nullifying the limitation. Stryker also presented evidence to the jury showing that the Var-A-Pulse tips readily fell off the front end of the handpiece, and that this led the development of the locking ring in the Pulsavac Pulse.

The jury ultimately found that there was no clear and convincing evidence that the Var-A-Pulse device anticipated the '807 patent's asserted claims. In light of the evidence that was presented, we find that a reasonable jury could have reached this verdict. Accordingly, we affirm.

*Appendix C*

The '383 Patent

At trial, Zimmer argued that the asserted claims of the '383 patent were obvious at the time of the invention in light of U.S. Patent No. 5,046,486 ("Grulke"), U.S. Patent No. 4,817,599 ("Drews II"), and U.S. Patent No. 5,350,356 ("Bales"). Zimmer contends that all of the limitations of the '383 patent's asserted claims were collectively present in the prior art references. Stryker does not directly dispute this point. Instead, it principally argues that because the designs claimed by Grulke and Drews II each exclude certain components described in the claims, one of ordinary skill in the art would not have been motivated to combine these references. In brief, Grulke disclosed a pulsed lavage system that uses a pneumatic, rather than an electric, motor. Drews II disclosed a pulsed irrigation system, powered by an electric motor, that is used as an eye wash.

At trial, Zimmer argued that it would have been obvious to one of ordinary skill to try to replace the pneumatic motor of Grulke with the electric motor in Drews II. Zimmer further argued that any reconfiguration of Grulke to accommodate an electric motor could be done by one of ordinary skill. *See In re ICON Health & Fitness, Inc.*, 496 F.3d 1374, 1382 (Fed. Cir. 2007) ("[W]e do not ignore the modifications that one skilled in the art would make to a device borrowed from the prior art."). Zimmer also argued that even though the Grulke reference was directed to orthopedic pulsed lavage systems, and the Drews II reference was directed to eyewash systems, they both described pressured water irrigation in hospitals and

clinics. Zimmer contended that that a person of ordinary skill in the art of pulsed lavage devices would thus be aware of the art in both fields and would be motivated to combine features from each of them. *See KSR Int'l Co. v. Teleflex Inc.*, 550 U.S. 398, 420, 127 S. Ct. 1727, 167 L. Ed. 2d 705 (2007) ("Common sense teaches, however, that familiar items may have obvious uses beyond their primary purposes, and in many cases a person of ordinary skill will be able to fit the teachings of multiple patents together like pieces of a puzzle.").

Zimmer also presented evidence of the examiner's rejection of certain claims in Stryker's prosecution of U.S. Patent Application No. 11/563,504 ("'504 application"), a continuation of the '383 patent, which occurred during the discovery phase of this case. During that patent application's prosecution, the examiner issued a non-final office action, rejecting certain claims of the '504 application as obvious over Grulke "and further in view of Drews II." J.A. 17226. Stryker did not attempt to traverse the rejection and instead ultimately abandoned the application. Stryker principally argued that because the claim at issue in the '504 application included certain different limitations, the examiner's rejection did not have any relevance to the '383 patent's claims. We note, however, that the difference in the detail of the claims is immaterial as to whether it would have been obvious to combine Grulke and Drews II. While persuasive, the examiner's proffered rejection is not on its own dispositive, in large part because the U.S. Patent and Trademark Office ("PTO") and district courts "take different approaches in determining invalidity and on the same evidence could

quite correctly come to different conclusions." *Ethicon, Inc. v. Quigg*, 849 F.2d 1422, 1428 (Fed. Cir. 1988).

Stryker also argued that the Grulke device differed substantially from the Drews II device. For example, it was designed for surgery rather than eyewashing. Grulke also disclosed a large device that was wheeled into an operating room that had many components that differed from those in the portable device disclosed Drews II. Stryker presented expert testimony rebutting Zimmer's evidence that it would have been obvious to combine these references.

On the basis of the record presented at trial, we agree with the district court that a reasonable jury could conclude that one of ordinary skill in the art would not have been motivated to combine the Grulke and Drews II references, even in light of the examiner's rejection of related claims on the basis of this combination. This is sufficient to affirm the district court's determination that Zimmer did not show, by clear and convincing evidence, that the '383 patent's claims were obvious.

For this reason, we need not reach other issues, including the evidence of secondary considerations of non-obviousness. Therefore, we affirm the district court's determination that the '383 patent's asserted claims were not obvious over the combination of Grulke, Drews II, and Bales.[5]

---

5. Zimmer also appeals the jury's finding that Stryker's products were sufficiently marked by the '383 patent during part

*Appendix C*

III

Willful Infringement

To establish willful infringement, the patentee has the burden of showing "by clear and convincing evidence that the infringer acted despite an objectively high likelihood that its actions constituted infringement of a valid patent." *In re Seagate Tech., LLC*, 497 F.3d 1360, 1371 (Fed. Cir. 2007) (en banc). "The state of mind of the accused infringer is not relevant to this objective inquiry." *Id.* Only if the patentee establishes this "threshold objective standard" does the inquiry then move on to whether "this objectively-

---

of the period for which it sought damages. We need not reach this issue, because we affirm the finding that Zimmer infringed the '807 and '329 patents, which is sufficient to support all of Stryker's award of damages for lost profit. However, we note that the jury was indeed incorrectly instructed that it should consider "whether some portion of the Stryker products not marked with a particular patent number were marked with other *related patent* notices." *Stryker Corp. v. Zimmer, Inc.*, No. 10-1223, 2013 U.S. Dist. LEXIS 171817, *32 (W.D. Mich. Aug. 7, 2013), ECF No. 537 ("*Post-Verdict Order*") (emphasis added). Because of this instruction, the jury could have been misled to consider a product marked with the number of a patent related to the '383 patent—but not with the '383 patent number itself—as being sufficiently marked. While the district court appears to have relied on cases that suggest that there is some flexibility in what constitutes sufficient marking, the statute is not so broad as to allow marking with a different patent—with different claims—to provide sufficient notice to the public. Rather, the plain language of the marking statute provides that the patented article be marked with the "number of *the* patent." 35 U.S.C § 287(a) (emphasis added).

defined risk (determined by the record developed in the infringement proceeding) was either known or so obvious that it should have been known to the accused infringer." *Id.* We have held that objective recklessness, even though "predicated on underlying mixed questions of law and fact, is best decided by the judge as a question of law subject to *de novo* review."[6] *Bard Peripheral Vascular, Inc. v. W.L. Gore & Assocs., Inc.*, 682 F.3d 1003, 1007 (Fed. Cir. 2012). Objective recklessness will not be found where the accused infringer's "position is susceptible to a reasonable conclusion of no infringement." *Uniloc USA, Inc. v. Microsoft Corp.*, 632 F.3d 1292, 1310 (Fed. Cir. 2011).

The district court failed to undertake an objective assessment of Zimmer's specific defenses to Stryker's claims. Instead, the district court's analysis of objective reasonableness summarily asserted that the "jury heard testimony" that Zimmer "all but instructed its design team to copy Stryker's products." *Post-Verdict Order*, 2013 U.S. Dist. LEXIS 171817 at *40. The district court further concluded that the "pioneering" nature of Stryker's inventions and the secondary considerations of

---

6. This court has not yet addressed whether *Octane Fitness, LLC v. ICON Health & Fitness, Inc.*, 134 S. Ct. 1749, 188 L. Ed. 2d 816 (2014), or *Highmark Inc. v. Allcare Health Mgmt. Sys., Inc.*, 134 S. Ct. 1744, 1746, 188 L. Ed. 2d 829 (2014), altered the standard of review under which this court analyzes the objective prong of willfulness. However, as the district court failed to undertake any objective assessment of Zimmer's specific defenses, the district court erred under any standard of review and thus this court need not now address what standard of review is proper regarding the objective prong of willfulness.

non-obviousness "made it dramatically less likely that Zimmer's invalidity arguments were reasonable." *Id.*

An objective assessment of the case shows that Zimmer presented reasonable defenses to all of the asserted claims of Stryker's patents.

First, with respect to the '329 patent, the motor in the Zimmer's Pulsavac Plus is located in the nub at the rear of the barrel of its pistol-shaped device. Stryker's infringement case relied on first persuading the district court to broadly construe the claim term "handle" to include the barrel of a pistol-shaped device—even though the patent specification only describes the handle and barrel separately. Then, Stryker had to persuade the jury that the barrel nub was a part of the device "designed to be held by hand," even in light of prosecution history in which Stryker distinguished between the location of the motor in the handle as opposed to the barrel. Though Stryker ultimately prevailed, Zimmer's arguments were not unreasonably founded on the plain meaning of "handle" in the context of a pistol-shaped device, the specification's exclusive disclosure of pistol-shaped devices, and the prosecution history—all on which it could have relied to provide notice of what the patent claims covered.

Second, with respect to the '807 patent, the specification only disclosed female nozzles on the front end of the device and male nozzles on the removable tip, which would be consistent with the claim requiring that the front end "receive" the tip. Zimmer's devices had the exact opposite configuration: tapered male nozzles on the

front end and female nozzles on the tip. Furthermore, the prior art Var-A-Pulse devices included all of the asserted claims' limitations except one. In light of the district court's claim construction, Stryker's defense to Zimmer's argument relied on persuading the jury that even though the tip's nozzles could fit into the handpiece and be held in place through friction with internal housing grooves, that did not mean they were "secured or fastened." Again, though Stryker prevailed, Zimmer's defenses were not unreasonable.

Third, with respect to the '383 patent, Zimmer's obviousness argument relied on a combination of references that was also raised by a PTO examiner during Stryker's prosecution of a related patent application—in an office action that occurred during discovery in this litigation. Zimmer's reliance on this combination was not without reason, in particular since the references related to pressured water irrigation systems used in hospitals and clinics. Therefore, even if Zimmer's defenses failed at trial, it still made a reasonable case that the '383 patent's asserted claims were obvious and thus invalid.

In sum, we find that Zimmer's defenses to the infringement of each patent claim that Stryker asserted were not objectively unreasonable, and, therefore, it did not act recklessly.

Attorneys' Fees

As the court reversed the district court's determination of willful infringement, and the district court's award of

attorneys' fees was based on that determination, we vacate the district court's grant of attorneys' fees. However, because there exist further allegations of litigation misconduct in this case and because the standard for finding an exceptional case has changed since the district court issued its finding regarding attorneys' fees, we remand this issue for further consideration by the district court.

## IV

For the aforementioned reasons, we affirm the jury's verdict of infringement and validity of all three patents at issue, as well as its award of lost profits. However, we reverse the district court's determination of willful infringement and thus vacate its award of trebled damages. We also vacate and remand the district court's finding of an exceptional case and its award of attorneys' fees. The case is remanded for further proceedings consistent with this opinion.

**AFFIRMED-IN-PART, REVERSED-IN-PART, VACATED-IN-PART, AND REMANDED**

## APPENDIX D — ORDER OF THE UNITED STATES DISTRICT COURT, WESTERN DISTRICT OF MICHIGAN, SOUTHERN DIVISION, FILED AUGUST 7, 2013

UNITED STATES DISTRICT COURT
WESTERN DISTRICT OF MICHIGAN
SOUTHERN DIVISION

STRYKER CORPORATION, STRYKER PUERTO RICO, LTD., AND STRYKER SALES CORPORATION,

*Plaintiffs and Counter-Defendants,*

v.

ZIMMER INC., AND ZIMMER SURGICAL, INC.,

*Defendants and Counter-Plaintiffs.*

CASE NO. 1:10-CV-1223

**ORDER REGARDING PARTIES' POST-VERDICT MOTIONS**

## I. BACKGROUND

Stryker and Zimmer are the two principal participants in the market for orthopedic pulsed lavage devices. A modern, orthopedic pulsed lavage device is a combination spray-gun and suction-tube, used by medical professionals to clean wounds and tissue during surgery. In 2010, Stryker sued Zimmer, alleging that Zimmer's line of

*Appendix D*

Pulsavac Plus pulsed lavage devices infringed three of Stryker's patents—U.S. Patent No. 6,022,329 ("the 329 patent"), U.S. Patent No. 7,144,383 ("the 383 patent"), and U.S. Patent No. 6,179,807 ("the 807 patent"). After claims construction and a round of summary judgment, one infringement claim and 22 invalidity defenses remained for trial. So did a series of remedial issues. (See Order Regarding Stryker's Motion for Partial Summary Judgment of Infringement, doc. # 247).

After two weeks of trial—featuring hundreds of exhibits and more than a dozen witnesses—and multiple days of deliberation, the jury returned a verdict unequivocally in Stryker's favor. In particular, the jury found: (1) that the Pulsavac Plus products infringed claim 2 of the 329 patent; (2) that Zimmer failed to establish any of its 22 invalidity contentions; and (3) that Stryker was entitled to $70 million in lost profits. (Verdict, doc. # 381.) The jury also found that Zimmer willfully infringed the valid claims under the patents in suit. (*Id.*)

The jury's verdict for Stryker means that the post-verdict motions must be evaluated against the prevailing narrative at trial. Here is a summary of that narrative. Through the proceedings, the jury learned that pulsed lavage devices had, for years, served an important function in surgical procedures—cleaning out wounds and removing necrotic tissue from wound sites. Early-model pulsed lavage devices were bulky and required a centralized power source. They had to be wheeled around a hospital, from one room to another. Stryker solved the problems associated with the size and power

needs of pulsed lavage devices by designing a portable, disposable, battery-powered, hand-held pulsed lavage device. Zimmer's Manufacturing Manager and Rule 30(b)(6) witness agreed that the Stryker products were "pioneering."

Zimmer had no answer for Stryker's new technology and saw its market share fall precipitously, to the point where Zimmer's presence in the pulsed lavage marketplace was at risk. Rather than relying on their own engineers to develop an alternative, Zimmer hired an independent contractor with no experience in pulsed lavage devices. In essence, Zimmer handed the independent contractor a copy of Stryker's product and said, "Make one for us." Under those conditions, it is not surprising that the finished Zimmer product turned out to look and function like Stryker's product. Nevertheless, Zimmer got its product to market quickly and in direct competition with Stryker. In doing so, it did not seek advice of outside patent counsel to assess the potential for infringement of Stryker's patents, or to opine on the validity of Stryker's patents.

Once Zimmer introduced its competing product, there was fierce, direct market competition between Stryker and Zimmer. Zimmer constantly sought to lure customers away from Stryker and had a fair amount of success in doing so with its new product. Then, in 2007, Zimmer was forced to pull its product from the market due to technical problems. Zimmer had received so many complaints about its product that it decided to cease production entirely and not re-start production until December 2008, when

it reentered the market. Upon reentering the market, Zimmer recaptured most of the market share it had forfeited by its year-plus absence.

Stryker filed this suit against Zimmer in 2010, alleging infringement of the 329, 807, and 383 patents. Zimmer lost every argument it advanced at claim construction, then lost most of the disputed claims on summary judgment. It lost all of its remaining claims at trial. At the time the jury announced its verdict, Zimmer had not changed its product design.[1] This is consistent with both the market and litigation strategy that Zimmer has followed for years. Zimmer chose a high-risk/high-reward strategy of competing immediately and aggressively in the pulsed lavage market and opted to worry about the potential legal consequences later. When Stryker sued, Zimmer's able counsel offered the most plausible defenses that

1. On May 21, 2013, almost four months after the close of trial and weeks after the parties completed their third and final round of briefing on their post-verdict motions, Zimmer unilaterally filed a brief attempting to move to introduce new evidence of a recently-completed redesign of the Pulsavac Plus (doc. # 531). Stryker promptly moved to strike (docket # 534). The Zimmer redesign referenced in the unilateral filing (docket # 531) was not available to the jury at trial. Nor was the redesign raised in the course of the parties' extensive post-verdict briefing. Moreover, Stryker has not had an opportunity to conduct discovery of Zimmer's redesign or the individuals responsible for it. In light of those factors, the Court grants Stryker's motion to strike (docket # 534). In addressing the parties' post-verdict motions, the Court will not consider the information Zimmer unilaterally submitted after the jury returned its verdict, and after the parties completed post-verdict briefing.

were available to them given Zimmer's pre-litigation market conduct. Ultimately, however, the trial proofs demonstrated that this was not a close case. The relative quality of the expert testimony on liability was notably favorable to Stryker. On damages, the quality of the expert testimony was closer, but still favored Stryker. Zimmer ultimately stuck with an "all or nothing" damages defense—rather than trying to chip away at Stryker's proposed lost profit number or its alternative theory—and lost, as the jury's verdict demonstrates.

Both sides have brought a number of post-verdict motions. Zimmer has brought ten post-verdict motions for judgment as a matter of law ("JMOL") or for a new trial. Specifically, Zimmer has moved: (1) for JMOL to preclude Stryker from recovering lost profits damages from before November 5, 2010 (doc. # 369); (2) for JMOL as to the invalidity of claim 2 of the 329 patent, or, in the alternative, for a new trial on the validity of claim 2 (doc. # 401); (3) for JMOL barring Stryker from recovering pre-suit damages under the doctrine of laches (doc. # 418); (4) for JMOL of non-infringement of claim 2 of the 329 patent, or, in the alternative, for a new trial on the issue of non-infringement of claim 2 (doc. # 425); (5) for JMOL limiting Stryker's damages because Stryker failed to mark its pulsed lavage devices in accordance with 35 U.S.C. § 287(a) and for a new trial on the issue of marking (doc. # 430); (6) for a new trial (doc. # 435); (7) for JMOL that Stryker's asserted claims under the 383 patent are invalid, or, in the alternative, for a new trial on the validity of those claims (doc. # 438); (8) for JMOL that claims 45, 50, 51, and 52 of the 807 patent are invalid,

or, in the alternative, for a new trial on the validity of those claims (doc. # 442); (9) for JMOL that Zimmer did not wilfully infringe Stryker's patents (doc. # 447); and (10) for JMOL to preclude Stryker from receiving lost profits damages and limiting Stryker's reasonable royalty recovery, or, in the alternative, for a new trial on damages (doc. # 453). Stryker has brought five post-verdict motions, seeking (1) a permanent injunction against Zimmer or, in the alternative, an ongoing royalty (doc. # 396); (2) supplemental damages (doc. # 414); (3) a finding of an "exceptional case" and an award of attorney's fees (doc. # 410); (4) an award of prejudgment interest (doc. # 399); and (5) enhanced damages for willful infringement (doc. # 405).

Both parties' post-verdict motions are addressed in this Order. The Court does not believe oral argument is necessary to illuminate the issues exhaustively briefed by the parties. For the reasons set out below, each of Zimmer's motions is **DENIED** and each of Stryker's motions is **GRANTED**.

## II. ZIMMER'S POST-VERDICT MOTIONS

Zimmer is not entitled to prevail on any of its post-verdict motions.

### A. Motion for JMOL to Preclude Stryker from Recovering Lost Profits Damages from Before November 5, 2010 (doc. # 369)

Zimmer's first motion is for judgment as a matter

of law ("JMOL") to preclude the Stryker plaintiffs from recovering lost profits damages from before November 5, 2010, on the ground that Stryker Sales Corporation lacks constitutional standing to sue for lost profits from before that date. A party is entitled to lost profits damages from an infringer if, during the period of infringement, the party had the right to exclude others from making, using, selling, or offering to sell inventions practicing the patents-in-suit. See *WiAV Solutions LLC v. Motorola, Inc.*, 631 F.3d 1257, 1264 (Fed. Cir. 2010) (citing 35 U.S.C. § 271(a) and *Warth v. Seldin*, 422 U.S. 490, 500, 95 S. Ct. 2197, 45 L. Ed. 2d 343 (1975)). The question raised by Zimmer's motion is whether Stryker Sales Corporation had that right before November 5, 2010. See *id.* (citing *Morrow v. Microsoft Corp.*, 499 F.3d 1332, 1340 (Fed. Cir. 2007)).

At the outset, the parties dispute whether Stryker's motion is properly characterized as asserting a lack of standing or merely as arguing against a particular damages theory. The distinction is an important one. Constitutional standing is a component of federal subject matter jurisdiction, meaning a party's lack of standing may be raised at any time in the litigation. See *Zurich Ins. Co. v. Logitrans, Inc.*, 297 F.3d 528, 531 (6th Cir. 2002) ("Article III standing is a jurisdictional requirement that cannot be waived, and such may be brought up at any time in the proceeding."); see also FED. R. CIV. P. 12(h)(3) (issues concerning a court's subject matter jurisdiction may be raised at any time). A motion to limit damages, on the other hand, goes to the merits of a party's claim and, therefore, may be waived if not included in the final

pre-trial order. See *Rockwell Int'l Co. v. United States*, 549 U.S. 457, 474, 127 S. Ct. 1397, 167 L. Ed. 2d 190 (2007) ("[C]laims, issues, defenses or theories of damages not included in the pretrial order are waived."); *Ghandi v. Detroit Police Dep't*, 823 F.2d 959, 962-63 (6th Cir. 1987) ("[A]n attempt to pursue any issue not listed in the [final pre-trial] order may be rejected by the Court."). The issue was not preserved in the final pre-trial order in this case. (See Order Accepting Parties' Pretrial Order, doc. # 345; Proposed Final Pretrial Order, doc. # 338.)

Zimmer casts its motion as asserting that Stryker lacks standing to pursue lost profits damages from before November 5, 2010. But Zimmer does not contest that Stryker Sales Corporation has standing to pursue lost profits damages after that date. Zimmer acknowledges, then, that Stryker Sales Corporation has standing to pursue *some* lost profits damages; it simply believes that Stryker is not entitled to *all* the lost profits damages it seeks. The dispute underlying Zimmer's motion, in other words, is not whether Stryker has claimed an injury that might entitle it to lost profits damages; it is the extent of that injury. That is the essence of the difference between a motion to limit damages and a motion challenging standing. Cf. *Davis v. FEC*, 554 U.S. 724, 734, 128 S. Ct. 2759, 171 L. Ed. 2d 737 (2008) (to survive a standing challenge, a plaintiff need only demonstrate that it has "standing for each claim [it] seeks to press and for each form of relief that is sought") (internal quotations omitted). Because Zimmer's motion is one to limit lost profits damages, rather than a motion challenging Stryker's standing to pursue lost profit damages altogether, it is waived unless

Zimmer raised it in the pre-trial order. A review of the Court's pre-trial order reveals that Zimmer did not raise the issue there, meaning it waived the argument going forward. (See Proposed Pre-Trial Order, doc. # 338; Order Accepting Pre-Trial Order Subject to Limitations, doc. # 345.) Consequently, Zimmer's motion must be denied as untimely.

Even on the merits, Zimmer is not entitled to prevail. Stryker Sales Corporation or other Stryker affiliates had full control over the patents-in-suit from 2002, when the earliest one issued. Stryker never shared with anyone outside the Stryker family more than a non-exclusive license to practice certain aspects of one of the patents. A series of *nunc pro tunc* agreements executed among the Stryker plaintiffs on November 5, 2010 formalized the rights among the Stryker parties. (See, *Nunc Pro Tunc* Amendment, Pls.' Trial Ex. 124-27.) By their terms, the agreements were retroactive, so that, under the agreements, Stryker Sales Corporation's exclusive license stretches back to January 1, 2002. (*Id.*) No one other than a Stryker party has ever had power to exclude others from practicing the patents-in-suit.

Zimmer complains, first, that Stryker had only a bare license, not an exclusive license. An exclusive license is one that gives the licensee the right to exclude others from making, using, selling, or offering to sell inventions practicing particular patents. See *WiAV Solutions LLC v. Motorola, Inc.*, 631 F.3d 1257, 1264 (Fed. Cir. 2010). A bare license, by contrast, is simply a covenant by the licensor not to sue the licensee for using the licensor's property in

a specified manner. See *Ortho Pharm. Corp. v. Genetics Inst., Inc.*, 52 F.3d 1026, 1032 (Fed. Cir. 1995). Only an "exclusive licensee"—that is, the holder of an exclusive license—may sue for lost profits damages. *Id.* Because Stryker independently gave Davol a limited license to practice the patents-in-suit for pulsed lavage devices with batteries in the handpiece, Zimmer contends that Stryker Sales Corporation is precluded from seeking lost profits.

The Court disagrees and concludes that Stryker had the right to seek lost profits as an exclusive licensee. By its terms, Stryker Sales Corporation's license empowered it to exclude others from selling or offering to sell pulsed lavage devices practicing the patents-in-suit with batteries outside the handpieces. (See *Nunc Pro Tunc* Amendment, Pls.' Trial Ex. 126, ¶ 7 (granting Stryker Sales Corporation "Exclusive Sub-Licens[e] and Exclusive Distributor[ship] with Respect to Pulsed Lavage Products"); see also Distribution Agreement, Pls.' Trial Ex. 120, ¶ 2.01 (giving Stryker Sales Corporation rights as "exclusive distributor").) That made the license an exclusive one. The license was exclusive, not because Stryker Sales Corporation was the one and only party practicing the patents-in-suit in certain categories of pulsed lavage devices, but because it gave Stryker Sales Corporation the power to choose who else could practice the patents-in-suit for those categories of pulsed lavage devices (*i.e.*, the power to exclude others from practicing the patents-in-suit). *Morrow v. Microsoft Corp.*, 499 F.3d 1332, 1340 (Fed. Cir. 2007) ("Parties that hold the exclusionary rights [under a patent] are often identified as exclusive licensees, because the grant of an exclusive license to

make, use, or sell the patented invention carries with it the right to prevent others from practicing the invention."); *Intellectual Prop. Dev., Inc. v. TCI Cablevision of Cal.*, 248 F.3d 1333, 1346 (Fed. Cir. 2001) ("A party . . . that has the right to exclude others from making, using, and selling an invention described in the claims of a patent is . . . injured by another entity that makes, uses, or sells the invention."). Stryker Sales Corporation did not lose the power to exclude when it allowed Davol to practice the patents-in-suit, any more than a landowner loses the power to exclude the whole public from his property when he chooses to admit a guest. In particular, Stryker Sales Corporation retained the right to keep Zimmer from practicing the patents-in-suit in pulsed lavage devices with batteries outside the handpiece. Thus, Davol's limited license to practice the patents-in-suit did not change the fact that Stryker Sales Corporation's license was exclusive for purposes of this suit.

Zimmer's broader challenge is to the retroactive application of the *nunc pro tunc* agreements. Zimmer contends that the agreements cannot give Stryker Sales Corporation the right to lost profits damages for a period when Stryker Sales Corporation was not actually an exclusive licensee of the patents-in-suit. At bottom, that is just another way of saying that *nunc pro tunc* agreements should not be retroactively effective. As Stryker points out, crediting Zimmer's argument would eliminate the possibility of *nunc pro tunc* agreements, despite their well-established use in the law. Indeed, the Federal Circuit has, in the past, given retroactive effect to *nunc pro tunc* agreements like the ones here at issue.

See, e.g., *Mas-Hamilton Grp. v. LaGard, Inc.*, 156 F.3d 1206, 1210-11 (Fed. Cir. 1998). Of course, a party may not use *nunc pro tunc* agreements to manufacture standing where it would not otherwise exist. See, e.g., *Enzo APA & Son, Inc. v. Geapag A.G.*, 134 F.3d 1090, 1093 (Fed. Cir. 1998). That is not an issue here, though. As noted above, Stryker Sales Corporation unquestionably has standing to sue for lost profits damages in this case, regardless of whether the *nunc pro tunc* agreements are retroactively effective. Consequently, the agreements are enforceable as written, meaning Stryker Sales Corporation is entitled to lost profits damages for any infringement by Zimmer during the period at issue in this litigation. See *Mas-Hamilton Grp.*, 156 F.3d at 1211.

**B. Motions for JMOL as to the Invalidity of Claim 2 of the 329 Patent and the Asserted Claims of the 383 and 807 Patents, or, in the Alternative, for a New Trial on the Validity of Those Claims (doc. ## 401, 438, and 442)**

Zimmer next argues that the jury erred in rejecting Zimmer's invalidity defenses on several claims of the patents-in-suit, so that JMOL on invalidity is appropriate. Rule 50 of the Federal Rules of Civil Procedure permits a court to render JMOL only if a party has been fully heard on an issue and there is no legally sufficient evidentiary basis for a reasonable jury to find for that party on that issue. FED. R. CIV. P. 50(a)(1). Phrased differently, the question is "whether a party has produced evidence 'legally sufficient' to warrant a jury determination in that party's favor." *Tellabs, Inc. v. Makor Issues & Rights, Ltd.*, 551 U.S. 308, n.5, 127 S. Ct. 2499, 168 L. Ed. 2d 179

(2007) (quoting Fed. R. Civ. P. 50(a)(1)). Rule 50's standard for JMOL mirrors Rule 56's standard for summary judgment so that, in ruling on a motion for JMOL, a court must consider the entire record and draw all reasonable inferences in favor of the nonmoving party. *Reeves v. Sanderson Plumbing Prods., Inc.*, 530 U.S. 133, 150-51, 120 S. Ct. 2097, 147 L. Ed. 2d 105 (2000).

The validity of the claims at issue in this case has been thoroughly explored—both before and during this litigation. In deciding to issue the patents-in-suit, the Patent Office conferred a presumption of validity on the claims. At summary judgment, the Court thoroughly considered the validity of several claims in the patents-in-suit. And, at trial, each side spent hours arguing the issue of validity to the jury. At every stage, the decision-maker rejected Zimmer's contention that claims within the patents-in-suit were invalid. Everything about the history of this case suggests that a reasonable jury could readily conclude that Zimmer failed to establish invalidity by the clear and convincing evidence required. See 35 U.S.C. § 282 ("A patent shall be presumed valid."); *Dayco Prods., Inc. v. Total Containment, Inc.*, 329 F.3d 1358, 1370 (Fed. Cir. 2003) (emphasizing the same); Order Denying Zimmer's Mot. for Summ. J. of Invalidity, doc. # 249; *Radvansky v. City of Olmsted Falls*, 496 F.3d 609, 614 (6th Cir. 2007) (to prevail on motion for JMOL, movant "must overcome the substantial deference owed to a jury verdict"); *Static Control Components, Inc. v. Lexmark Int'l, Inc.*, 697 F.3d 387, 414 (6th Cir. 2012) (same). Zimmer's bare disagreement with the jury's conclusion on validity is not, by itself, a reason to second-guess all those earlier decisions.

*Appendix D*

In each of its motions for JMOL on invalidity, Zimmer asserts that Stryker either read nonexistent limitations into the contested claims or misrepresented the law regarding anticipation and obviousness. For instance, with respect to the validity of claim 2 of the 329 patent, Zimmer says "Stryker argued [the] Ito [device] is not a pulsed irrigation handpiece because its water reservoir is too small for knee surgery . . . [notwithstanding that] claim does not require a certain sized water reservoir nor is its use limited to knee surgery." (Def.'s Br. in Supp. of Motion for JMOL, doc. # 402, at 5.) The purported "limitations" of which Zimmer complains, however, are really just distinctions between the prior art references and the claimed inventions. Far from rendering such distinctions impermissible, the law on obviousness expressly requires the jury to consider whether a prior art reference is "from the same field of endeavor [or] reasonably pertinent to the particular problem with which the inventor is involved." *In re Clay*, 966 F.2d 656, 658-59 (Fed. Cir. 1992). Evidence that a device from one field has no clear connection to a second field, or that it would be impractical to use the device in the second field, plainly makes it less likely that the device rendered obvious an invention in the second field. For that reason, Stryker's arguments distinguishing its inventions from Zimmer's prior art references furnish an adequate basis from which a reasonable jury could conclude that the claimed inventions were non-obvious.

More to the point, what Stryker argued at trial is not dispositive for purposes of reviewing a motion for JMOL. The question on JMOL is whether Zimmer can show, based on the record evidence, that the jury could

not reasonably have found for Stryker. FED. R. CIV. P. 50(a)(1). But a reasonable jury could very well have found in Stryker's favor on the validity issues, based on the record in this case. In the course of hours of testimony, first by the inventor of the patents-in-suit, and then by Stryker's technical expert, Stryker meticulously distinguished its inventions from Zimmer's prior art references—by pointing out why the prior art references did not constitute "prior art" under 35 U.S.C. § 103, by emphasizing why the patents-in-suit were not rendered obvious by the prior art references, and by illustrating why the prior art references did not disclose a particular element from a given claim. (See, e.g., Trial. Tr., doc. # 388, at 20 (testimony by Stryker's technical expert, Neil Sheehan, explaining why a person of ordinary skill in the art would not think the Ito device rendered the patents-in-suit obvious); *id.* at 22-23 (testimony by Sheehan explaining that the Ito device does not, in fact, disclose a yoke)). Zimmer, obviously, disagreed with those distinctions and its own technical expert spent several hours at trial explaining why he thought they were wrong. The jury, however, was entitled to credit Stryker's expert's opinions about whether the claims at issue were anticipated or whether they would have been obvious to one of ordinary skill in the art. It was certainly not unreasonable for doing so, any more than the patent office was unreasonable for granting the patents in the first place, or the Court was unreasonable for denying Zimmer's earlier motions for summary judgment on the basis of invalidity. Because the jury could reasonably have adopted Stryker's distinctions over Zimmer's arguments to the contrary, JMOL is simply not appropriate here.

For many of the same reasons, Zimmer's motions for a new trial on the validity of the contested claims are also denied. Under Rule 59, after a jury trial, "[a] court may, on motion, grant a new trial on all or some of the issues . . . for any of the reasons for which new trials have heretofore been granted in an action at law in federal court." FED. R. CIV. P. 59(a)(1)(A). "Generally, a court may grant a new trial under Rule 59 if the verdict is against the weight of the evidence, if the damages award is excessive, or if the trial was influenced by prejudice or bias, or otherwise unfair to the moving party." *Conte v. Gen. Housewares Corp.*, 215 F.3d 628, 637 (6th Cir. 2000); see also *Holmes v. City of Massillon*, 78 F.3d 1041, 1045-46 (6th Cir. 1996) (same point). A court reviewing a motion under Rule 59 "must compare and weigh the opposing evidence." *Clay v. Ford Motor Co.*, 215 F.3d 663, 672 (6th Cir. 2000). However, "while the district judge has a duty to intervene in appropriate cases, the jury's verdict should be accepted if it is one which could reasonably have been reached." *Conte*, 215 F.3d at 637 (quoting *Toth v. Yoder Co.*, 749 F.2d 1190, 1197 (6th Cir. 1984)).

Stryker's technical expert plausibly distinguished the claimed inventions from Zimmer's prior art references and explained why the claimed inventions would not have been obvious to one of ordinary skill in the art based on those references. Zimmer's bare disagreement with those distinctions does not mean the jury's verdict implicitly adopting them was against the great weight of the evidence. See, e.g., *Pregis Corp. v. Kappos*, 700 F.3d 1348, 1353-54 (Fed. Cir. 2012) (noting that, while the question of obviousness is ultimately one of law, the question of

what a reference teaches or whether a person of ordinary skill in the art would have been motivated to combine the teachings of separate references are questions of fact, entitled to deference). To the contrary, Stryker's expert on validity issues was clear, understandable, and convincing in his testimony. Consequently, Zimmer is not entitled to a new trial on the validity of any of the asserted claims.

### C. Zimmer's Motion for JMOL of Non-Infringement of Claim 2 of the 329 Patent, or, in the Alternative, for a New Trial (doc. # 425)

Zimmer's next motion is for JMOL—or, alternatively, a new trial on the issue—of non-infringement of claim 2 of the 329 patent. The sole issue in the motion is whether, as a matter of law, the motor in the Pulsavac Plus devices is in the handle of the devices. At claim construction, the Court defined "handle" to mean "a portion of the device designed to be held by a hand or hands." (Mem. Op., doc. # 106, at 8-9.)

Zimmer's motion for JMOL of non-infringement is substantively identical to Zimmer's earlier motion for summary judgment of non-infringement on the same claim (doc. # 165). It raises the same arguments and relies on the same evidence. At summary judgment, the Court categorically dismissed those arguments and found that a "reasonable jury could conclude that the Pulsavac Plus devices include an electric motor in a part of the housing designed to be held by the hand or hands." (Order Denying Mot. for Summ. J. of Non-Infringement, doc. # 248, at 3.)

*Appendix D*

The Court sees no reason to upset its earlier conclusions, especially in light of the testimony from multiple witnesses—including the designer of the Pulsavac Plus and the individual in charge of developing the Pulsavac Plus—that the battery in the Pulsavac Plus devices was in a part of the device designed to be held by the hand or hands. (See, e.g., May Dep. Tr., doc. # 458-5, at 6 (testimony of design engineer of Pulsavac Plus explaining that Pulsavac Plus was "designed to be held in multiple locations" and proceeding to demonstrate how "you can technically say [the portion of the Pulsavac Plus housing the motor] is a handle"); see also Trial Tr., doc. # 359, at 28-30 (testimony of Stryker's expert, Neil Sheehan, explaining how Pulsavac Plus meets "handle" limitation under Court's construction of that term)). That testimony affords an entirely legitimate basis from which a reasonable jury could conclude that the motor in the Pulsavac Plus devices was in the handle of the devices. As with practically all issues raised at trial, Zimmer presented some evidence suggesting the opposite conclusion. But that evidence was not so substantial or overwhelming as to render the jury's verdict on infringement of claim 2 categorically unreasonable, or even against the great weight of the evidence. See *Denhof v. City of Grand Rapids*, 494 F.3d 534, 543 (grant of new trial was inappropriate "where the case came down to a question of who the jury believed").

Zimmer's other objections—that Stryker's statements during prosecution of an earlier patent foreclosed its infringement claims in this case, and that Stryker is estopped from claiming infringement—were thoroughly

addressed and properly rejected at the summary judgment stage. (See Order Denying Mot. for Summ. J. of Non-Infringement, doc. # 248, at 3-5.) Nothing that has happened since summary judgment has affected the validity of the Court's decision.

### D. Zimmer's Motion for JMOL Limiting Damages Under 35 U.S.C. § 287(a) and for a New Trial on the Issue of Patent Marking (doc. # 430)

Next, Zimmer argues that it is entitled to JMOL and a new trial because Stryker did not mark substantially all of the commercial embodiments of the patents-in-suit with the appropriate patent numbers. The patent marking statute provides that:

> Patentees . . . may give notice to the public that [a product] is patented, either by fixing thereon the word "patent" or the abbreviation "pat.", together with the number of the patent, or by fixing thereon the word "patent" or the abbreviation "pat." together with an address of a posting on the Internet, accessible to the public without charge for accessing the address, that associates the patented article with the number of the patent, or when, from the character of the article, this can not be done, by fixing to it, or to the package wherein one or more of them is contained, a label containing a like notice. In the event of a failure so to mark, no damages shall be recovered by the patentee in any action for infringement,

> except on proof that the infringer was notified of the infringement and continued to infringe thereafter, in which event damages may be recovered only for infringement occurring after such notice. Filing of an action for infringement shall constitute such notice.

35 U.S.C. § 287(a). Compliance with the marking statute does not require that a patentee mark every patented article with the corresponding patents. Rather, it suffices that "substantially all" of the patented articles are properly marked. *Nike, Inc. v. Wal-Mart Stores, Inc.*, 138 F.3d 1437, 1446 (Fed. Cir. 1998). Furthermore, as the patent marking statute suggests, when it is impracticable to mark the product itself, a patentee may comply with the marking statute by marking the patent numbers on the packaging for the product. See, e.g., *Sessions v. Romadka*, 145 U.S. 29, 50, 12 S. Ct. 799, 36 L. Ed. 609, 1892 Dec. Comm'r Pat. 382 (1892).

Zimmer urges that Stryker should not be permitted to recover damages from before December 10, 2010 (the day it filed suit in this matter) for four reasons: (1) it failed to mark any of its actual products with the numbers for the patents-in-suit; (2) it failed to provide evidence from which a reasonable jury could conclude that Stryker marked substantially all of its product labels with the numbers for the patents-in-suit; (3) it failed to mark, in any way, over 800,000 of its actual products with the numbers for the patents-in-suit; and (4) it failed to provide evidence from which a reasonable jury could find that Stryker marked substantially all of its products with the 383 and 807

patents before October 14, 2010, and with the 329 patent before August 14, 2006.

The Court addressed and rejected Zimmer's first and third arguments for JMOL at summary judgment. (Order, doc. # 246, at 5-8.) Zimmer has not come forward with any new arguments on either of those fronts, so there is no reason for the Court to revisit its earlier determinations.

Zimmer's second and fourth arguments for JMOL go to the sufficiency of the evidence Stryker presented at trial and, as such, were not addressed in the Court's earlier orders. Neither argument is meritorious however. Zimmer's second argument—that Stryker failed to produce evidence sufficient to convince a reasonable jury that it marked substantially all of its product labels with the numbers for the patents-in-suit—is belied by the record. Stryker employee Jan Haan, for example, testified to having personally reviewed hundreds of documents confirming that Stryker marked the appropriate patent number on the labeling of substantially all of its products during the period in question. (See, e.g., Trial Tr., doc. # 384, at 793-96, 803-05.) Zimmer objects that Haan's testimony did not distinguish between marking the product label and marking the carton label or the instructions for use. Not only does the case law fail to distinguish between marking one form of labeling as opposed to another for purposes of the marking statute, but a sampling of actual product labels from the period in question appears to confirm that Stryker marked the product labels, themselves, with the patent numbers. (See Def.'s Tr. Ex. AAU (copies of product labels for numerous

product codes, all showing appropriate patent numbers on the product label).) All of which is to say that there was enough evidence for a reasonable jury to conclude that Stryker marked substantially all of the product labels with the appropriate patent numbers.

Zimmer's remaining argument in support of its motion for JMOL is that Stryker failed to provide sufficient evidence of the date when it began marking its labels with the patents-in-suit. Specifically, it argues that no reasonable jury could have found, as did the jury in this case, that Stryker marked substantially all of its patented products with the 329 patent prior to August 14, 2006, and with the 383 and 807 patents prior to October 14, 2010, as there was no evidence at trial of the "date by which [Stryker] began to mark substantially all of its products." (Def.'s Br. in Supp., doc. # 431, at 12.) But the marking statute does not require Stryker to prove that it began marking products on a particular date. It only requires that, for the period for which it seeks damages, Stryker have marked substantially all of its products with the appropriate patent numbers. See *Maxwell v. J. Baker, Inc.*, 86 F.3d 1098, 1111 (Fed. Cir. 1996) (under marking statute, damages are computed from the time when the patentee "either began marking its products in compliance with section 287(a)[, constructive notice,] or when it actually notified [the accused infringer] of its infringement, whichever was earlier"). The relevant inquiry, then, is whether Stryker marked substantially all of its products with the 329 and 807 patents between December 10, 2004 and December 10, 2010, and whether it marked substantially all of its products with the 383 patent

between December 15, 2006 and December 10, 2010. The parties largely agree that, during those periods, Stryker marked roughly 99.52% of the relevant products with the 329 patent, 99.78% of the relevant products with the 807 patent, and 83.96% of the relevant products with the 383 patents. Although, as Zimmer argued at trial, a reasonable jury might conclude that those numbers did not amount to "substantially all" of the relevant products, it is equally true that a reasonable jury could conclude that, under the circumstances, each of those percentages rises to the level of "substantially all" products. See, e.g., *Funai Elec. Co., Ltd. v. Daewoo Elecs. Corp.*, 616 F.3d 1357, 1374-75 (Fed. Cir. 2010) (affirming that marking 88-91% of all the commercial embodiments of a patent sufficed to satisfy the marking statute). Accordingly, Zimmer is not entitled to JMOL on marking.

That leaves Zimmer's motion for a new trial on the issue of marking. Zimmer asserts that the Court erred when it instructed the jury that, in deciding whether Stryker complied with the marking statute, the jury could consider "whether some portion of the Stryker products not marked with a particular patent number were marked with other related patent notices." (See Final Draft Jury Instructions, doc. # 377-1, at Instruction # 29.) An erroneous jury instruction warrants a new trial only if the party moving for a new trial establishes, *inter alia*, that the instructions were legally erroneous and that the instructions had a prejudicial effect on the jury. *Bettcher Indus. v. Bunzl USA, Inc.*, 661 F.3d 629, 638 (Fed. Cir. 2011); *NTP, Inc. v. Research In Motion, Ltd.*, 418 F.3d 1282, 1311-12 (Fed. Cir. 2005).

In this case, Zimmer has not established that the challenged instruction was erroneous or that it had a prejudicial effect on the jury. As to whether the instruction was erroneous, Zimmer has not pointed to a single case holding that marking a product with a given patent is necessarily not an effective means of notifying other parties that the product is also covered by other, related patents from the same family as the patent with which the product is marked. To the contrary, in at least some circumstances, marking the product with a closely related patent would appear to provide reasonable persons with exactly the sort of constructive notice the patent marking statute is calculated to effect. See, e.g., *Ethicon Endo-Surgery, Inc. v. Hologic, Inc.*, 689 F. Supp. 2d 929, 945-46 (S.D. Ohio 2010) (noting "the [Supreme] Court's long-standing focus on the notice effected by the method of marking the patented article rather than on the precise mechanistic compliance with the statute."). Given the broad, functional reading courts have ascribed to the patent marking statute, the Court's instruction on marking was not so clearly erroneous.

Moreover, even if the Court's instruction was erroneous, Zimmer has not produced any evidence that the challenged instruction was prejudicial. To determine whether an instruction was prejudicial, a court must consider "the entirety of the proceedings, including the jury instructions as a whole." *Delta-X Corp. v. Baker Hughes Prod. Tools, Inc.*, 984 F.2d 410, 415 (Fed. Cir. 1993). Looking at Jury Instruction 29 in its entirety, it is clear the thrust of the instruction was that the jury should consider whether Stryker had shown, by a preponderance

of the evidence, that it marked its products in accordance with the patent marking statute. The instruction defined "marking" as "placing the word 'patent' or the abbreviation 'PAT' with the number of the patent on substantially all of the products it sold that included the patent invention." (Final Draft Jury Instructions, doc. # 377-1, at 42.) That is, almost verbatim, the language Zimmer insists in its motion the Court should have used. It is telling, moreover, that, at trial, Zimmer argued that the challenged language from Instruction 29 actually *helped* Zimmer's case. (See Trial Tr., doc. # 389, at 138 ("So Mr. Vogler's pointing to something he says helps him. It doesn't. It makes it worse.").) On balance, then, the whole of the instructions, together with Zimmer's own arguments from trial, make clear that the jury was not erroneously instructed in a way that prejudiced Zimmer. Thus, there is no basis for granting a new trial.

### E. Zimmer's Motion for JMOL of No Willful Infringement (doc. # 447)

Zimmer's next motion is for JMOL of no willful infringement. "To establish willful infringement, a patentee must show by clear and convincing evidence that the infringer acted despite an objectively high likelihood that its action constituted infringement of a valid patent." *In re Seagate Tech., LLC*, 497 F.3d 1360, 1371 (Fed. Cir. 2007). "[T]he patentee must also demonstrate that this objectively-defined risk . . . was either known or so obvious that it should have been known to the accused infringer." *Id.* Willfulness, then, consists of two elements: (1) an objective element that is often, but not always, a question

of law, and (2) a subjective element that is inherently a question of fact, to be decided by the jury. *Bard Peripheral Vascular, Inc. v. W.L. Gore & Assocs., Inc.*, 682 F.3d 1003, 1007 (Fed. Cir. 2012).

Zimmer's motion raises several discrete issues, the first of which is whether Stryker presented any evidence at trial from which the jury could have concluded that Zimmer knew or should have known about the asserted patents. Zimmer suggests that Stryker did not, but its suggestion is belied by the record. For example, Stryker's expert, Neil Sheehan, testified that, "Zimmer knew about the patents in suit, and to the extent there are assertions that—I believe there's an assertion they didn't know about the 383. Well, they should have known. They are in the business. They should be looking at each other's patents. That's what people—that's what competitors do." (Trial Tr., doc. # 359, at 50-51.) Furthermore, as discussed above, Stryker presented ample evidence at trial that it marked substantially all of its products with the corresponding patents-in-suit, from which the jury could reasonably have inferred that Zimmer, as Stryker's chief—and, as a practical matter, only—competitor in the pulsed lavage market, either knew or should have known of the patents-in-suit well in advance of the litigation. That is especially true here, where Stryker also presented testimony from several members of Zimmer's design team that Zimmer instructed them to review Stryker's patented devices in designing the accused products. (See, e.g., Donizetti Dep., doc. # 458-3, at 3 (noting that Zimmer showed its design team a Stryker product as a model for developing the accused products); see also Trial Tr., doc.

# 388, at 14-19, 60-64 (referencing Zimmer's reliance on Stryker products in developing the accused products).) From this, as well, the jury could reasonably have inferred that Zimmer either knew or had reason to know of the patents-in-suit. (See also Def.'s Resp. to Interrog., doc. # 406-2, at 4 (admitting to knowledge of the 329 and 807 patents in 2000 and 2001, respectively).)

The next issue raised in Zimmer's motion is the relevance of Stryker's decision not to seek a preliminary injunction against Zimmer. Zimmer argues that Stryker is not entitled to enhancement of any damages it incurred after filing the suit, since it could have effectively prevented those damages in the first place by seeking a preliminary injunction at the time it filed. As support for its position, Zimmer cites the Federal Circuit's decision in *In re Seagate*, 497 F.3d 1360, 1375 (Fed. Cir. 2007), where that Court observed: "a patentee who does not attempt to stop an accused infringer's activities [by seeking a preliminary injunction] should not be allowed to accrue enhanced damages based solely on the infringer's post-filing conduct." Zimmer reads *Seagate* as setting an absolute bar on any enhancement of post-filing damages when the patentee does not seek a preliminary injunction. On closer inspection, though, *Seagate* does not bear that reading. For one thing, taken to its logical conclusion, Zimmer's position on *Seagate* would apply, not just to post-filing willfulness damages, but also to pre-filing willfulness damages. After all, following Zimmer's logic, Stryker could have protected itself by filing earlier and seeking a preliminary injunction right away. That result, however, would all but eliminate enhancement

of damages, in a way that no Federal Circuit case has suggested. Additionally, Zimmer's position presumes that Stryker's efforts to obtain a preliminary injunction would have been successful. But there is no such guarantee, particularly given Zimmer's dogged reliance on laches and other defenses. And the idea that Stryker could have prevented Zimmer's ongoing infringement by merely filing for a preliminary injunction is controverted by the fact that, even after Stryker prevailed on dozens of distinct motions and issues pre-trial, Zimmer refused to even modify, let alone halt, its infringing conduct. Thus, the idea that Stryker had it entirely within its power to cut off Zimmer's continuing infringement by means of a preliminary injunction is simply not borne out by the facts of this case. The Court is not inclined to read *Seagate* in a way that requires such counterintuitive results. The case is more naturally read for the proposition that a patentee's decision not to seek a preliminary injunction is relevant to, but not dispositive of, the issue of enhanced damages.

Having addressed Zimmer's two preliminary arguments in this motion, the Court turns to the first prong of the willfulness analysis—whether Zimmer's conduct was objectively reasonable. If an "accused infringer's position is susceptible to a reasonable conclusion of no infringement," the infringer's conduct cannot be objectively unreasonable. *Cohesive Techs., Inc. v. Waters Corp.*, 543 F.3d 1351, 1374 (Fed. Cir. 2008). Zimmer's central argument on this point is that, because the Court did not grant Stryker's motions for summary judgment on the issues that went to trial, Zimmer's positions on those issues were, necessarily, reasonable.

In other words, Zimmer contends that since the Court determined that a reasonable jury might agree with Zimmer's view, Zimmer was not objectively unreasonable in holding that view. The flaw in Zimmer's argument is that there is a difference between an "objectively reasonable" position and a position with which a reasonable jury could agree. The bare fact that some jury, somewhere might adopt Zimmer's position does not mean Zimmer's position is objectively reasonable. See *Depuy Spine, Inc. v. Medtronic Sofamor Danek, Inc.*, 567 F.3d 1314, 1337 (Fed. Cir. 2009) ("[T]he fact that an issue was submitted to a jury does not automatically immunize an accused infringer from a finding of willful infringement . . . ."). To the contrary, an action is objectively unreasonable if "the infringer acted despite an objectively high likelihood that its actions constituted infringement of a valid patent." *In re Seagate Tech., LLC*, 497 F.3d 1360, 1371 (Fed. Cir. 2007).

In this case, while it was conceivable that the jury could have accepted one or more of Zimmer's defenses, it was far from likely. For instance, at trial, the jury heard testimony that Zimmer all-but instructed its design team to copy Stryker's products. Along the same lines, Zimmer's lead engineer, Bill Donizetti, acknowledged Stryker's inventions to be "pioneering," suggesting they were novel and, therefore, non-obvious. On top of all that, Stryker's evidence regarding secondary considerations of non-obviousness made it dramatically less likely that Zimmer's invalidity arguments were reasonable. Specifically, Stryker clearly established that its inventions: (1) were a major commercial success; (2) solved a long-felt, unmet need to free up operating room space and replace

large capital equipment with a self-contained, disposable device; (3) were copied by others, including Stryker's two leading competitors; (4) were licensed by Davol; and (5) were praised by others, including Zimmer. (See Trial Tr., doc. # 384, at 25-28 (expert testimony on secondary considerations of non-obviousness); Trial Tr., doc. # 388, at 10-20 (same).) Given the considerable evidence that Stryker's patents were neither anticipated nor obvious, there was an objectively high likelihood that Zimmer's actions constituted infringement of Stryker's valid patents. While that high likelihood was not necessarily a certainty—and, thus, did not allow summary judgment on all of Stryker's claims—it was high enough to satisfy the requirements for objective willfulness.

On the subjective willfulness prong, substantial evidence supports the jury's finding that Zimmer willfully infringed Stryker's patents. In assessing whether infringement is subjectively willful under the totality of the circumstances, fact-finders should consider: (1) whether the infringer copied the patentee's commercial products; (2) whether the infringer presented evidence that it obtained opinions of counsel to justify its infringing actions; (3) whether the infringer attempted to avoid infringement by designing around the patents; and (4) whether the infringer acted in accordance with the standards of commerce. See *K-TEC v. Vita-Mix Corp.*, 696 F.3d 1364, 1378 (Fed. Cir. 2012); *Broadcom Corp. v. Qualcomm Inc.*, 543 F.3d 683, 698 (Fed. Cir. 2008); *Creative Internet Adver. Corp. v. Yahoo! Inc.*, No. 6:07-cv-354, 2009 U.S. Dist. LEXIS 65690, 2009 WL 2382132, at *2 (E.D. Tex., July 30, 2009). At trial, evidence of copying came

from Donizetti, who admitted that Zimmer instructed Donizetti's design team to model its design after features of Stryker's products. (See, e.g., Trial Tr., doc. # 358, at 126 ("Q: And you copied. I mean, you stated just a second ago you copied. A: Yes."); *id.* at 125 ("Q: That's what Zimmer copied from Stryker, isn't it? A: I guess you could say that.").) By contrast, Zimmer presented no evidence that it obtained the advice of counsel as to whether its accused products infringed Stryker's patents. Zimmer acknowledged at trial that it did not take any actions to stop selling the accused products, even after the Court found that Zimmer was infringing several claims of the patents-in-suit. And, finally, Zimmer offered no evidence that its behavior—copying a competitor's product, without attempting to design around the competitor's patents and without first seeking clearance from counsel on infringement concerns—was in keeping with standards of commerce in the medical device industry. All told, the jury had ample justification for finding, as a subjective matter, that Zimmer willfully infringed the patents-in-suit.

### F. Zimmer's Motion for JMOL to Preclude Stryker from Receiving Lost Profits Damages and to Limit Stryker's Reasonable Royalty Recovery, or Alternatively for a New Trial on Damages (doc. # 453)

Zimmer's next motion for JMOL challenges the jury's decisions on damages. It includes five arguments for JMOL. First, Zimmer argues that Stryker's *nunc pro tunc* agreements were insufficient to confer standing on any of the Stryker plaintiffs in this suit. Next, Zimmer argues

that the jury erred in disregarding Zimmer's arguments that it could easily have offshored its manufacturing facilities and/or changed its infringing design to eliminate any possible infringement. Third, Zimmer argues that the jury's royalty base improperly included Zimmer's foreign sales revenue when it should have counted only domestic sales revenue. Fourth, Zimmer argues that the jury erred in calculating damages by basing its calculations on the entire value of the patented devices, since it should have calculated damages based solely on the value of the patented features. Finally, Zimmer argues that the jury's 25% royalty rate is unsupported by the evidence and "legally inappropriate." In the alternative, Zimmer argues that a new trial is warranted because the jury's damages findings were against the great weight of the evidence.

With respect to Zimmer's first JMOL argument, the Court has largely addressed Zimmer's standing arguments earlier in this Order and concluded that Stryker Sales Corporation had an exclusive license to market and sell the patented devices, such that it has standing to sue. See *supra* Part III.A. The only twist in Zimmer's argument this time around is Zimmer's pointing to a distribution agreement between Stryker Sales Corporation and Stryker Puerto Rico. (See PTX-125, doc. # 471-5.) True, the distribution agreement provides that "Stryker Corporation holds an exclusive right and exclusive sub-license to utilize [the patents-in-suit] . . . to market and sell Pulsed Lavage Products." (*Id.* at 3.) Other language in the agreement, however, makes clear that it excludes "Pulsed Lavage Products or any other products subject to any exclusive distribution agreement

between [Stryker Puerto Rico] and Stryker Corporation," including the products at issue in this case. (*Id.* at 2.) Indeed, the agreement expressly states that, "Nothing in this Agreement should be construed in a manner that controverts the exclusivity of Stryker Corporation's exclusive right and exclusive sub-license under the Pulsed Lavage Patents." (*Id.* at 3.) Thus, the distribution agreement does not change the Court's earlier finding that Stryker Sales Corporation had an exclusive sub-license to market and sell pulsed lavage devices practicing the patents in suit.

Stryker's other evidence of non-exclusivity is no more compelling. For example, the fact that Bruce Henniges happened to use the word "share" in describing the licensing arrangement between the Stryker plaintiffs is not legally significant for the simple reason that Henniges is not in a position to authoritatively interpret the agreements' terms. Likewise, the fact that Stryker's licenses may be revoked at any time does not make them any less exclusive in the absence of revocation. Zimmer has not identified, and the Court has not found, any cases suggesting otherwise. Zimmer has failed to show why the Stryker plaintiffs lack standing, as exclusive licensees, to pursue lost profits damages.

Zimmer's next argument is that the jury improperly disregarded Zimmer's two proposed non-infringing alternatives: (1) moving its manufacturing and sales operations overseas, or (2) utilizing a two-piece drain tube so as to avoid infringement. Zimmer's principal evidence of the viability of offshoring was: (1) Stryker's damages

expert, Catharine Lawton's testimony that companies make business decisions to move manufacturing locations "based on the opportunities and issues they face"; (2) Zimmer employee Joan Fishel's testimony that Stryker moved its Var-A-Pulse manufacturing operation from Ohio to North Carolina in 2001; and (3) a draft Zimmer strategic plan containing the words "Offshore/outsourcing manufacturing," but with the words "Offshore/outsourcing" crossed out. None of that evidence establishes that it was feasible for Zimmer to offshore its manufacturing and sales operations for the accused products. Indeed, the fact that the word "offshore/outsourcing" are crossed out in the strategic plan memo suggests exactly the opposite: that it was deemed impracticable for Zimmer to move manufacturing locations. That conclusion was buttressed by Fishel's testimony that offshoring "was never something that Zimmer wanted to do." (See Trial Tr., doc. # 387, at 151 (counsel for Stryker reading Fishel's testimony).)

In the face of the evidence suggesting that offshoring was not a viable alternative, Zimmer produced no concrete evidence that relocating its manufacturing centers would actually work. It never came forward with a plan for outsourcing, never said where it would relocate to, never said how much it would cost to offshore, and never said when it would have made the move. Zimmer did not have to go into exhaustive detail about its offshoring plans, but, to rely on offshoring as a defense in this case, it plainly must do more than merely declare that it could have moved its operations out of the country. The jury can hardly be blamed for rejecting a defense that has no

concrete evidentiary support. See *Grain Processing Corp. v. Am. Maize-Prods. Co.*, 185 F.3d 1341, 1353 (Fed. Cir. 1999) ("Mere speculation or conclusory assertions will not suffice to overcome the inference [of impracticability that attaches to proposed non-infringing alternatives not actually implemented in the damages period].").

The same holds true with Zimmer's proposed design-around—using a two-piece drain tube, rather than the single-piece drain tube covered by the patents-in-suit. Because Zimmer only manufactured and sold a single piece drain tube, the law presumes that a two-piece drain tube was not commercially available. *Id.* Zimmer's attempts throughout the proceedings to prove that a two-piece drain tube was commercially available were largely unavailing. Zimmer first came forward with a two-piece drain tube concept as part of its damages expert's report. Reviewing the proposed design, Stryker's technical expert observed that it was unclear whether the proposed tube, as constructed by Zimmer, would even fit in the existing handpiece. (Trial Tr., doc. # 359, at 79-80.) Zimmer then proposed another two-piece drain tube, made by cutting the Pulsavac Plus suction tube approximately eight inches below the handpiece, then adding an external connector to re-connect the suction tube. (Trial Tr., doc. # 385, at 212-13.) When asked about the proposed design-around, however, Zimmer's own expert admitted that it was still a single piece drain tube and that, from an engineering vantage point, the proposed design around was not "a good decision." (Trial Tr., doc. # 387, at 49.) In short, Zimmer's evidence that a two-piece drain tube was a viable, non-infringing alternative to infringement was

far from overwhelming, and the jury could reasonably have concluded, from the record before it, that Zimmer's proposed design-around was not commercially feasible.

Zimmer's next JMOL argument is that the jury applied the wrong royalty base by including non-infringing sales from Zimmer's foreign affiliates to foreign end users. According to Zimmer, the jury should only have accounted for the value of Zimmer's sales from its Dover facility to its foreign affiliates, since the foreign sales are not covered by the Patent Act. What Zimmer's argument overlooks is that it is the manufacture of infringing products in this country—not just the sale of infringing products—that constitutes the infringement for which Stryker is entitled to damages "adequate to compensate for infringement." See 35 U.S.C. §§ 271(a), 284. Zimmer does not dispute that it manufactured its infringing products in America, nor does it dispute that it realized value from this infringement by selling its products both in the United States and abroad. The jury's decision to include the profits Zimmer realized abroad as a result of its domestic infringement was a reasonable way of ascertaining the value Zimmer ultimately realized from its infringement. The testimony of Stryker's damages expert, Catharine Lawton, confirmed as much and the jury was not unreasonable for adopting that testimony over Zimmer's competing account of damages calculations. See *Fujifilm Corp. v. Benun*, 605 F.3d 1366, 1372-73 (Fed. Cir. 2010) (inclusion of foreign revenue as part of royalty base is fundamentally a question of fact, to be decided by the jury).

*Appendix D*

Zimmer's fourth JMOL argument is that the jury wrongly based its damages calculations on the total value of the Stryker products, rather than on the value the patents-in-suit contributed to those products. Zimmer says that, under the "entire market value rule," the jury should only have considered the percentage of revenues or profits attributable to the patents, themselves, rather than to the whole product.

At the outset, Zimmer waived its "entire market value" argument by failing to propose a jury instruction on the rule at trial. See FED. R. CIV. P. 51(c); see also *Republic Tobacco Co. v. N. Atl. Trading Co., Inc.*, 381 F.3d 717, 733 (7th Cir. 2004) (appellant waived argument by failing to propose jury instruction on the subject of the argument). Because the jury had no way of knowing about the "entire market value rule," it cannot be faulted for failing to apply it. Even had the jury been apprised of the "entire market value rule," moreover, there is no basis for Zimmer's argument that the rule precludes the jury's royalty calculations in this case. The general rule is that royalties must be based on the value of the "smallest salable patent-practicing unit." *LaserDynamics, Inc. v. Quanta Computer, Inc.*, 694 F.3d 51, 67 (Fed. Cir. 2012). What the smallest salable patent-practicing unit is appears to be a classic question of fact. Lawton explained in great detail at trial why the patents-in-suit could not be parsed out into individual components, but, rather, were inseparable elements of the whole pulsed lavage handpiece. (Trial Tr., doc. # 384, at 140 ("And all of these products, the tips and the splash shields and the tubing, it all functions together .... So all of these types of products

function together in a functional unit.") From Lawton's testimony, in particular, the jury had an ample basis from which to conclude that the smallest salable unit in this case was the pulsed lavage handpiece. Zimmer, by contrast, presented no evidence that the patents-in-suit could be separated from the handpieces, so as to be independent, saleable units. Thus, the jury was not unreasonable in deciding that the smallest salable patent-practicing unit here was the pulsed lavage handpiece as a whole, and using the value of the whole device in its royalty calculations.

Zimmer's final JMOL argument is that the jury's 25% royalty rate is unsupported by the record. There is, however, substantial evidence in the record from which the jury could have concluded that a 25% royalty rate was appropriate. For example, after a detailed analysis of the parties, the market for pulsed lavage devices, and the nature of the patents-in-suit, Lawton opined to the jury that the parties would have negotiated a royalty rate of 32.2%. (*Id.* at 199-217 (detailing basis for Lawton's royalty calculations).) That figure was not some arbitrary percentage; it was supported by evidence, referenced throughout the trial, all tending to show that Stryker's inventions had made it the dominant player in the pulsed lavage market, so that Zimmer was rapidly losing market share with its competing devices to the point that Zimmer was in danger of being forced out of the pulsed lavage market entirely. (See *id.* at 203-17.) Furthermore, testimony from Stryker's technical expert, Neil Sheehan, confirmed that Stryker's patents were difficult to design-around, so that a higher royalty would be expected. Finally, because Stryker and Zimmer were,

in effect, the only two competitors in the market, there was evidence that they would have preferred to maintain the exclusivity of their patented inventions. (*Id.* at 206-07.) From those facts, and based on her calculations of both parties' expected profits under various scenarios, Lawton determined that a 32.2% royalty was appropriate. That the jury ultimately departed downward from this figure does not make its ultimate decision arbitrary. See, e.g., *Spectralytics, Inc. v. Cordis Corp*, 649 F.3d 1336, 1346-47 (Fed. Cir. 2011) ("The jury was entitled to choose a damages award within the amounts advocated by the opposing parties."); *Monsanto Co. v. McFarling*, 488 F.3d 973, 979-81 (Fed. Cir. 2007), cert. denied, 552 U.S. 1096, 128 S. Ct. 871, 169 L. Ed. 2d 724 (2008) (affirming jury award of reasonable royalty rate in between parties' proffered royalty rates). More likely, it means that the jury rejected some of the advantages Lawton attributed to Stryker in her hypothetical negotiation. Whatever the jury's reasons, though, the fact remains that there was ample evidence from which the jury could have concluded that a 25% royalty rate was reasonable.

The last part of Zimmer's motion asks for a new trial on damages, arguing that the damges verdict is against the great weight of the evidence. Zimmer's argument, in essence, is that the cumulative effect of the jury's various errors in calculating damages warrants a new trial. For the reasons set out above, the Court does not agree that the jury's decisions were erroneous, especially not so erroneous as to warrant a new trial. Rather, the jury's findings on damages were supported by substantial evidence, making a new trial inappropriate.

*Appendix D*

**G. Zimmer's Motion for a New Trial (doc. # 435)**

Next is Zimmer's motion for a new trial. Zimmer argues that a new trial is warranted because: (1) the Court allowed Stryker to reference the Court's summary judgment rulings on infringement; (2) the Court prevented Zimmer from reciting to the jury the Court's statements on the reasonableness of some of Zimmer's positions; and (3) the Court instructed the jury to answer questions regarding remedies regardless of its finding on liability.

With respect to its first argument—that Stryker should not have been allowed to introduce evidence of the Court's rulings from summary judgment that Zimmer had infringed several of Stryker's claims—Zimmer understates the relevancy of the Court's earlier rulings. As the Court emphasized at trial, its prior rulings—referred to as the "litigation scorecard"—were necessary factual predicates to Stryker's argument that Zimmer did not change its marketing or sales position after various milestones in the litigation. (Trial Tr., doc. # 359, at 574-76.) In addition to serving as a factual predicate for Stryker's change of position argument, moreover, the litigation scorecard also buttressed Stryker's willfulness argument to the extent it showed Zimmer's infringement defenses to have been unreasonable. Because the litigation scorecard bears at least some connection to the reasonableness of Zimmer's defenses, it was properly before the jury.

Not only was the litigation scorecard relevant, but any prejudicial effect it might have had was minimal. To begin with, the issue summary chart—to which Zimmer

assented before trial—made it clear to the jury that the Court had decided most of the infringement claims in Stryker's favor prior to trial. (See Issue Summary Chart, doc. # 352-1, at 1.) Thus, Stryker's references to the Court's earlier references did not tell the jury anything it did not already know. If anything, referencing the Court's earlier infringement rulings was necessary to avoid confusing and help the jury understand why it was being asked to decide certain infringement questions but not others. Furthermore, the Court carefully explained in its jury instructions that its earlier rulings on some claims at summary judgment were in no way probative on the claims the jury was asked to decide. (See, e.g., Jury Instructions, doc. # 377-1, at 15 ("In deciding your infringement issue, do not use my infringement decisions to sway your decision in either direction.").) The Court thereby made clear to the jury that its previous rulings were only useful for purposes of framing the questions before the jury, not to suggest a particular answer to any of those questions. On balance, then, the relevance of the litigation scorecard substantially outweighed any prejudice from it.

Zimmer's second argument for a new trial is that the Court did not allow Zimmer to read to the jury the Court's statements on the reasonableness of some of Zimmer's positions. As the Court noted at trial, there are obvious problems with placing the Court in the position of a witness whose statements are to be read to the jury. Most notably, the Court is not subject to cross-examination, so introducing its statements is problematic from an evidentiary perspective. See FED. R. EVID. 605 (presiding

judge may not testify in trial as a witness). Moreover, because of the Court's role in directing the case, allowing the Court's statements into evidence runs the risk that the jurors will place undue emphasis on those statements, possibly to the exclusion of other relevant evidence.

Furthermore, the bare fact that Zimmer was unable to quote the Court's opinions to the jury did not necessarily prevent it from making its case. Just as Stryker pointed to the Court's earlier rulings as evidence of willfulness, Zimmer was also free to point out that the Court had expressly declined to grant summary judgment on the claims now before the jury, implying there were reasonable disputes about infringement on those claims. See, e.g., *Powell v. Home Depot U.S.A., Inc.*, 663 F.3d 1221, 1235 (Fed. Cir. 2011) (defendant argued that district court's denial of plaintiff's "request for a preliminary injunction and the closeness of the inequitable conduct case indicate[d] that it did not act despite an objectively high likelihood of infringement"). Just as Stryker's witnesses expounded on the meaning of the Court's rulings, Zimmer's expert was free to opine on the reasonableness of Zimmer's arguments in light of the Court's refusal to grant summary judgment to Stryker on those claims. All of this was available to Zimmer without using the Court's own words. Thus, Zimmer cannot show that it was prejudiced from the Court's decision not to allow its own words into evidence, any more than Stryker was prejudiced by the Court's refusal to allow other language from the Court's opinions—much more favorable to Stryker—into evidence.

*Appendix D*

Zimmer's final argument for a new trial is that the Court erred in instructing the jury to answer questions of remedy regardless of its findings on infringement and invalidity. Zimmer argues that, in so doing, the Court implied to the jury that some sort of remedy was warranted in the case. But the Court's instructions did no such thing. Indeed, the jury was expressly instructed that the Court's asking them to answer questions of remedy in no way implied that they were to find against Zimmer. (Jury Instruction No. 25, doc. # 377-1, at 34 ("You should not interpret the fact that I am giving instructions about the plaintiff's damages as an indication in any way that I believe that the plaintiff should, or should not, win this case. I am instructing you on damages only so that you will have guidance to answer the questions on remedial issues for our use in the event plaintiff ultimately prevails.").) Courts in other patent cases routinely ask juries to answer such questions in exactly the manner the Court did. See, e.g., KEVIN F. O'MALLEY ET AL., FED. JURY PRAC. & INSTR. § 106:02 (6th ed.) ("The fact I have instructed you as to the proper measure of damages should not be considered as indicating any view of mine as to which party is entitled to your verdict in this case."). To suggest that the Court's instructions somehow prejudiced the jury is really just to say that the jury was incapable of listening to and following those same instructions.

Even if Zimmer could show some prejudice from any or all of the alleged errors, moreover, that prejudice would not rise to the level necessary to grant a new trial. See, e.g., *Brooks v. Toyotomi Co., Ltd.*, 86 F.3d 582, 588 (6th Cir. 1996) ("A court should refrain from interfering with

a jury's verdict unless it is clear that the jury reached a seriously erroneous result. The simple fact that a grant of a new trial might result in a different outcome is not a valid basis for disturbing a jury's verdict which is otherwise based upon legally sufficient evidence."). In this case, the evidence overwhelmingly favored Stryker, a fact reflected in the one-sidedness of the jury's verdict and the proceedings leading up to it. Zimmer has not suggested any reason for thinking that Stryker's evidence at trial—even without the evidence Zimmer challenges in its motion for a new trial—was legally insufficient to support the jury's verdict. On those facts, a new trial is simply not warranted.

### H. Zimmer's Motion for Judgment Barring Pre-Suit Damages Under the Defense of Laches (doc. # 418)

Zimmer's final motion is for judgment barring pre-suit damages under the equitable defense of laches. Zimmer argues that Stryker knew of the infringing Pulsavac Plus products at least as early as 2000, and that Stryker's delay in filing suit against Zimmer until 2010 resulted in the loss or destruction of evidence that would have been valuable to Zimmer's defense. Zimmer brings its motion under Rule 52(c), which addresses judgment on partial findings. Although, by its terms, Rule 52(c) applies only to bench trials, because Zimmer's laches defense deals with a question of equity, and because the jury was therefore not allowed to consider laches at trial, the Court may properly address it here. In considering whether to grant judgment under Rule 52(c), the district court applies the

same standard of proof and weighs the evidence as it would at the conclusion of a bench trial.[2] That, in turn, means the court does not view the evidence through a particular lens or draw inferences favorable to either party. See *Ritchie v. United States*, 451 F.3d 1019, 1023 (9th Cir. 2006). Moreover, the court is free to make findings on the issue in accordance with its own view of the evidence. See *id.* A court's fact-finding authority under Rule 52(c) is limited, however, by the fundamental principle that, on issues presented to the jury, the court may not make a finding contrary to a jury-found fact. See *Beacon Theatres, Inc. v. Westover*, 359 U.S. 500, 508-10, 79 S. Ct. 948, 3 L. Ed. 2d 988 (1959).

To succeed on a laches defense, an accused infringer must ordinarily show that (1) the patentee delayed in filing the suit for an unreasonable length of time, and (2) that the delay actually prejudiced the alleged infringer. *A.C. Aukerman Co. v. R.L. Chaides Constr. Co.*, 960 F.2d 1020, 1032 (Fed. Cir. 1992). Actual prejudice may be either economic or evidentiary. *Id.* at 1033. Economic prejudice exists only when the accused infringer changes its economic position as a result of the patentee's delay in filing suit. *Gasser Chair Co. v. Infanti Chair Mfg. Corp.*, 60 F.3d 770, 775 (Fed. Cir. 1995). Evidentiary prejudice arises only where the defendant is unable "to present a full and fair defense on the merits." *A.C. Aukerman Co.*, 960 F.2d at 1033. Even when an accused infringer shows undue delay and some form of actual prejudice, however,

---

2. Both parties elected to rely only on the evidence presented to the jury for this defense.

the Court still has discretion to decide against finding laches. *Id.* at 1036 (emphasizing that laches is, at bottom, a discretionary doctrine).

At summary judgment, the Court considered and denied most of the laches arguments Zimmer now raises, specifically finding that Zimmer had not made the required showing of evidentiary prejudice. (See Order Denying Mot. for Summ. J. Barring Pre-Suit Damages Pursuant to Defense of Laches, doc. # 251.) Zimmer nevertheless insists that it is now entitled to laches because, at trial, Stryker took advantage of Zimmer's inability to produce the lost or destroyed evidence. Stryker's conduct at trial, Zimmer says, established precisely the sort of evidentiary prejudice that supports a grant of laches. The Court disagrees and finds, as a matter of fact, that Zimmer did not suffer evidentiary prejudice attributable to any delay by Stryker.

Zimmer argues it was prejudiced because it could not show certain devices and documents to the jury, as those documents were allegedly lost or destroyed before Stryker filed suit. At trial, however, Zimmer's witnesses testified in detail about those same devices and the subject matter of those same documents, introduced photographs of allegedly destroyed devices, and otherwise demonstrated for the jury the content of the evidence they could not procure directly. (See, e.g., Trial Tr., doc. # 386, at 179 (introducing photograph of allegedly destroyed Pulsavac I device in the course of Zimmer's technical expert's trial testimony).) Because Zimmer was able to thoroughly convey to the jury the information it would

have conveyed had it had access to the allegedly lost or destroyed evidence, Zimmer cannot credibly argue that the alleged loss of evidence materially prejudiced its case. And without such a showing of prejudice, laches is inappropriate. *Cleveland Newspaper Guild, Local 1 v. Plain Dealer Publ'g Co.*, 839 F.2d 1147, 1153 (6th Cir. 1988) (laches requires showing of actual prejudice).

Laches is doubly inappropriate here given the volume of documentary and testimonial evidence Zimmer otherwise compiled for this case—almost twenty hours of witness testimony and thousands upon thousands of pages of documents. As the Court observed in denying Zimmer's motion for summary judgment on the basis of laches: "The sheer size of the record in this matter belies the claim that Zimmer's defense might fail for want of additional information. More importantly, the record does not disclose any critical evidentiary gap for Zimmer that is fairly traceable to Stryker's alleged delay." (Order Denying Mot. for Summ. J. Barring Pre-Suit Damages Pursuant to Defense of Laches, doc. # 251, at 8.) What was true before trial remains true now. The Court concludes, therefore, that Zimmer has not shown evidentiary prejudice sufficient to warrant a grant of laches.

Zimmer raises one genuinely new argument in its Rule 52(c) motion, an argument not addressed in the Court's summary judgment order (doc. # 251). Zimmer's new argument is that, had Stryker sued sooner, Zimmer would have considered and implemented potential design-arounds, saving it time and money. That argument has both an evidentiary and economic aspect to it. In terms

of establishing evidentiary prejudice, Zimmer might be suggesting that, had Stryker forced it to consider and implement the design-arounds, then, at trial, Zimmer could have pointed to its attempts to implement the design-arounds as evidence of their feasibility. In other words, because Stryker did not force Zimmer to implement the design-arounds, Zimmer has no evidence that the design-arounds were feasible. That argument fails because nothing about it suggests that any evidence was actually lost or destroyed as a result of Stryker's delay in bringing suit. At trial, Zimmer remained free as ever to explain the feasibility of its potential design-arounds and, indeed, it did so on several occasions—not just at trial, but in a number of its filings. Moreover, there was nothing to prevent Zimmer from implementing the design-arounds before Stryker brought the suit. In that sense, the fact that Zimmer lacks evidence of the feasibility of the design-arounds can hardly be blamed on Stryker.

Alternatively, Zimmer's argument about design-arounds might be viewed as an argument showing economic prejudice, *i.e.*, that Zimmer forewent a less costly alternative because Stryker did not sue for infringement. That argument fails for several reasons. Most obviously, there is no evidence that Zimmer actually would have resorted to its proposed design-arounds had Stryker sued at an earlier date (see *infra*). Indeed Zimmer's position in this litigation—that Stryker's patents are invalid and unenforceable—suggests it would not have sought to completely overhaul its products or productions systems to avoid infringing those patents. Had Zimmer seriously contemplated implementing the design-arounds, moreover,

it could have done so after Stryker filed this lawsuit, thereby avoiding possible liability for supplemental damages. The fact that Zimmer did nothing to alter the infringing products or their manufacture after Stryker filed this lawsuit suggests that it has not seriously contemplated the proposed design-arounds. Granting laches on the basis of those design-arounds would, therefore, be inequitable. See *Ecolab, Inc. v. Envirochem, Inc.*, 264 F.3d 1358, 1371-72 (Fed. Cir. 2001) (defendant's firm belief that its product was non-infringing, coupled with continuation of infringing conduct after being contacted by patentee, demonstrated lack of economic prejudice); *James River Corp. v. Hallmark Cards*, 915 F. Supp. 968, 978 (E.D. Wis. 1996) ("An infringer's continuation of infringing activity is probative of a lack of prejudice.").

Finally, also with respect to Zimmer's proposed design-arounds, the jury's award implicitly rejected Zimmer's claim that its proposed design-arounds would have saved it from infringement. At trial, Stryker asked for $70 million in lost profit damages. Zimmer argued that figure was excessive because it could have avoided infringement at any time by implementing its proposed design-arounds. The jury's decision to award Stryker all the lost profit damages it sought implies that it totally rejected Zimmer's proposed design-around defense. Thus, there is simply no basis for granting Zimmer's laches argument based on the availability of its proposed design-arounds. As Zimmer has established neither economic nor evidentiary prejudice, it is not entitled to prevail on its Rule 52(c) motion for judgment based on the defense of laches.

After thoroughly reviewing each of Zimmer's ten post-trial motions, the Court finds no basis for departing from the jury's verdict. In light of the evidence presented at trial, the jury reached a reasonable result, one the law does not empower this Court to disturb.

## III. STRYKER'S POST-VERDICT MOTIONS

Stryker is entitled to prevail on each of its five post-verdict motions.

### A. Motion for a Permanent Injunction or, in the Alternative, an Ongoing Royalty (doc. # 396)

Stryker's first motion is to permanently enjoin Zimmer from manufacturing the infringing Pulsavac Plus devices, to the extent those devices infringe the 807 patent.[3] At summary judgment, the Court found that the accused Pulsavac Plus devices infringed the 807 patent, and, at trial, the jury rejected Zimmer's validity challenge. Thus, the only issue here is remedy.

A court "may grant injunctions in accordance with the principles of equity to prevent the violation of any right secured by patent, on such terms as the court deems reasonable." 35 U.S.C. § 283. A patentee is entitled

3. The injunction Stryker seeks does not cover infringement of the 329 and 383 patents because both of those patents expired earlier this year.

to a permanent injunction where: (1) it has suffered an irreparable injury; (2) remedies available at law, such as money damages, are inadequate to compensate for that injury; (3) a remedy is warranted in light of the balance of hardships between the plaintiff and defendant; and (4) the public interest would not be disserved by a permanent injunction. *eBay Inc. v. MercExchange, L.L.C.*, 547 U.S. 388, 391, 126 S. Ct. 1837, 164 L. Ed. 2d 641 (2006). The Federal Circuit has acknowledged "the long tradition of equity practice granting injunctive relief upon a finding of infringement in the vast majority of patent cases." *Presidio Components, Inc. v. Am. Technical Ceramics Corp.*, 702 F.3d 1351, 1362 (Fed. Cir. 2012).

**1. Irreparable Injury**

Zimmer's infringement has harmed—and continues to harm—Stryker by depriving it of market share and diminishing Stryker's right to exclude others from practicing its patents, all to the direct and immediate advantage of Stryker's only major competitor in the orthopedic pulsed lavage market (Zimmer). As to the first of these sources of harm, the record establishes by a preponderance of the evidence that Zimmer's sale of infringing products costs Stryker between 15-18% market share. (See, e.g., PTX-166 Excerpts, doc. # 465-5, at 3 (showing loss of market share).) Loss of market share to an infringer is a textbook example of irreparable harm. See *Presidio Components, Inc.*, 702 F.3d at 1363 ("This [loss of market share] squarely supports a finding of irreparable harm."); *i4i Ltd. P'ship v. Microsoft Corp.*, 598 F.3d 831, 861 (Fed. Cir. 2010) ("Past harm to a patentee's

market share, revenues, and brand recognition is relevant for determining whether the patentee 'has suffered an irreparable injury.'"). The loss is all the more significant in this case because Stryker has demonstrated a reluctance to license its patented technologies to competitors. See *Presidio Components, Inc.*, 702 F.3d at 1363 ("The district court correctly found Presidio's unwillingness to license favored finding irreparable injury."). While it is true that Stryker did grant Davol a limited license to practice the 329 patent,[4] the record discloses no license to practice the 807 patent at issue on this motion. Thus, Zimmer's infringement of the 807 patent did not just deprive Stryker of significant market share, but it did so using technology that Zimmer could not otherwise obtain.

On top of all that, both parties recognize that the orthopedic pulsed lavage market consists, for practical purposes, of just two players: Stryker and Zimmer. (See,

---

4. The license was limited in two ways. First, it was limited in the sense that Davol is not a significant player in the orthopedic pulsed lavage market, so any competition with Stryker would, as a practical matter, be minimal. (See Trial Tr., doc. # 385, at 168-69 (Zimmer representative testifying that Davol does not compete effectively in the orthopedic area).) Second, the license was limited because it expressly restricted Davol to practicing the patent in devices with batteries *in* the handpiece. (See Trial Tr., doc. # 387, at 127 (Zimmer's damages expert testifying that the Davol license restricted Davol to selling the device with batteries in the handpiece).) Stryker's primary market is for pulsed lavage devices with batteries *outside* the handpiece. (See, e.g., Trial Tr., doc. # 387, at 134 (Stryker's damages expert testifying that 90% of Stryker's pulsed lavage sales are for devices with batteries outside the handpiece).)

e.g., Trial Tr., doc. # 385, at 168-69 (testimony from Zimmer brand manager acknowledging that Stryker and Zimmer are the two major competitors in the orthopedic pulsed lavage device market).) Those two companies are fiercely competitive with one another because, in a two player industry, one player's gain is almost invariably the other player's loss. For that reason courts have consistently treated infringement by a direct competitor as an important factor favoring a finding of irreparable harm. See, e.g., *Presidio Components, Inc.*, 702 F.3d at 1363-64 ("Direct competition in the same market is certainly one factor suggesting strongly the potential for irreparable harm without enforcement of the right to exclude."). In this case, there is no doubt that Zimmer's infringement not only cost Stryker market share and deprived it of the exclusive use of proprietary technology, but that it directly benefitted Stryker's only rival in the orthopedic pulsed lavage industry. That is more than enough to establish irreparable injury.

Zimmer makes two arguments as to why its ongoing infringement does not irreparably harm Stryker, but neither argument is availing. Zimmer's first argument is that Stryker's alleged delay in seeking injunctive relief—by, for example, not seeking a preliminary injunction at the outset of this action—shows that Stryker has not suffered irreparable harm. But the Federal Circuit has "never held that failure to seek a preliminary injunction must be considered as a factor weighing against a court's issuance of a permanent injunction." *Mytee Prods., Inc. v. Harris Research, Inc.*, 439 Fed. App'x 882, 888 (Fed. Cir. 2011). Indeed, there is no obvious reason why it should be

considered. To the contrary, an infringer's past successful infringement should not become a sort of de facto license to continue infringing. Infringement does not cease to be a problem just because the patent holder has not pursued a particular remedy.

Zimmer's other argument against finding irreparable harm is that Stryker has not shown that Zimmer's infringement of the 807 patent is what caused Stryker to lose market share. The premise of Zimmer's argument is that the 807 patent only covers a component of a pulsed lavage device, so that demand for the device might be driven by something other than demand for the component covered by the 807 patent. That premise is plainly flawed, since, by its express terms, the 807 patent covers the entire pulsed lavage handpiece. (See 807 Patent, doc. # 470-2, at 34 (disclosing "An irrigating handpiece for receiving a tip assembly having a discharge tube and a suction tube, said irrigating handpiece including . . .").) As a result, demand for the 807 patent technology is inextricably linked to demand for the whole handpiece. At trial, Zimmer made the same flawed argument to the jury as one basis for rejecting Stryker's damage theory. The verdict demonstrates that the jury also rejected Zimmer's theory. Zimmer's attempt to parse the 807 patent into separable components, and thereby negate Stryker's claim of irreparable injury, must therefore fail.

### 2. Inadequacy of Remedies at Law

Courts have consistently recognized that the financial harm accompanying loss of market share to an

adjudged infringer is inherently difficult to quantify, so that damages will seldom be an adequate remedy. See, e.g., *i4i Ltd. P'ship v. Microsoft Corp.*, 598 F.3d 831, 861 (Fed. Cir. 2010) (monetary loss from loss of market share "is particularly difficult to quantify"). Likewise, because the right to exclude others from using a patented invention has value in and of itself, independent of its impact on the patentee's financial statements, monetary damages tend to be an inadequate remedy for continued infringement. *Presidio Components, Inc.*, 702 F.3d at 1363 ("[The] historical practice of protecting the right to exclude through injunctive relief is not surprising given the difficulties of protecting this right solely with monetary relief."). For those reasons, money damages will not adequately compensate Stryker for Zimmer's infringement.

Zimmer argues that, because the jury awarded Stryker damages for past infringement, damages must also be a suitable remedy for future infringement. By that reasoning, any award of damages for past infringement would militate against injunctive relief for future infringement. This Court cannot sanction an approach so at odds with Federal Circuit precedent. See, e.g., *Atlas Powder Co. v. Ireco Chems.*, 773 F.2d 1230, 1233 (Fed. Cir. 1985) ("While monetary relief is often the sole remedy for past infringement, it does not follow that a money award is also the sole remedy against future infringement.").

### 3. Balance of Hardships

The balance of hardships in this case also favors granting Stryker's request for an injunction. Denying

Stryker's motion would force Stryker to compete against its own technology, an outcome that "places a substantial hardship on [the patentee]." *Robert Bosch, LLC*, 659 F.3d at 1156. By contrast, the only hardship Zimmer would face from an injunction would be having to stop infringing, something the law does not treat as a legitimate hardship. *i4i Ltd. P'ship*, 598 F.3d at 863 ("[N]either commercial success, nor sunk development costs, shield an infringer from injunctive relief.").

**4. Public Interest**

The public interest also weighs in favor of granting a permanent injunction. The public has a strong interest in maintaining the integrity of the patent system by enforcing a patent owner's right to exclude. See *Broadcom Corp. v. Qualcomm Inc.*, 543 F.3d 683, 704 (Fed. Cir. 2008) (acknowledging district court's conclusion that "it is generally in the public interest to uphold patent rights"); *Smith & Nephew, Inc. v. Synthes*, 466 F. Supp. 2d 978, 985 ("As a general matter, the public maintains an interest in protecting the rights of patent holders, and injunctions serve that interest."). Without an injunction, there is every reason to believe that Zimmer will continue violating Stryker's right to exclude, undermining the policies that underlie the patent laws.

Zimmer counters that an injunction is contrary to the public interest because Stryker will probably raise prices on its pulsed lavage devices if Zimmer's infringing products are forced off the market. At the outset, Zimmer's argument is purely speculative. There is no

concrete evidence that Zimmer's exit from the market will inevitably cause Stryker to increase prices for its pulsed lavage devices. Even taking Zimmer's speculation as true, moreover, Zimmer's argument proves too much. Every patent is a form of limited monopoly power from an economic perspective, but Congress has made the judgment that the value of the patent system outweighs whatever temporary monopoly profit may accrue to the patent holder. The Federal Circuit has repeatedly suggested that any potential short-term price reductions that infringement may trigger are usually outweighed by the long-term costs of infringement, including diminished incentives to invent and erosion of respect for the patent laws. See, e.g., *Edwards Lifesciences AG v. CoreValve, Inc.*, 699 F.3d 1305, 1314 (Fed. Cir. 2012) ("The innovation incentive of the patent is grounded on the market exclusivity whereby the inventor profits from his invention.").

### 5. Timing of the Preliminary Injunction

Since all four injunction factors support granting Stryker's motion for a permanent injunction, it is clear that Zimmer should be permanently enjoined from producing or selling infringing products. The only remaining question is whether the injunction should be stayed until some future date. The Court may exercise its discretion to stay an injunction by considering: (1) whether Zimmer made a strong showing that it is likely to succeed on the merits; (2) whether Zimmer will be irreparably injured absent a stay; (3) whether the issuance of a stay will substantially injure Stryker; and (4) whether delaying

the stay is in the public interest. *Hilton v. Braunskill*, 481 U.S. 770, 776, 107 S. Ct. 2113, 95 L. Ed. 2d 724 (1987).

None of the four considerations for staying an injunction supports doing so here. Zimmer is unlikely to succeed on its argument that the 807 patent is invalid, for all the reasons that prompted the Court to reject that same argument at summary judgment and that prompted the jury to reject it at trial. (See Order Denying Zimmer's Motion for Summary Judgment of Invalidity, doc. # 249; Verdict, doc. # 381, at 2-3.) As noted above, an immediate injunction will only injure Zimmer to the extent Zimmer will no longer be allowed to infringe Stryker's patents, something it had no right to do in the first place. By contrast, staying the injunction means that Stryker will continue to lose market share to Zimmer and will continue to be deprived of its right to exclude others (especially its chief competitor) from practicing its patents. Lastly, the public's interest in enforcing the patent laws favors giving the injunction immediate effect in this case. For those reasons, Zimmer must be immediately and permanently enjoined from manufacturing, marketing, or selling any products found to have infringed the 807 patent, including the infringing Pulsavac Plus products.

**B. Motion for Supplemental Damages (doc. # 414)**

The jury's $70 million lost profits award to Stryker only reflected the damages Stryker had suffered through November 30, 2012. That is because, at the time of trial, Zimmer's most up-to-date sales data only stretched through November 30, 2012. Zimmer has now produced

supplemental sales data for its infringing products, reflecting sales from December 1, 2012 through Feburary 28, 2013. Based on that supplemental data, Stryker's damages expert has calculated Stryker's additional lost profits for that time frame to be $2,351,257.66. Stryker now asks for an award of supplemental lost profits damages in that amount.

The patent damages statute provides that a patentee is entitled to "damages adequate to compensate for [] infringement," including damages for sales not accounted for at trial, such as post-verdict sales. 35 U.S.C. § 284; see *Finjan, Inc. v. Secure Computing Corp.*, 626 F.3d 1197, 1213 (Fed. Cir. 2011) ("[A] patentee is not fully compensated if the damages award did not include future lost sales."). Zimmer concedes as much, but denies that Stryker is entitled to supplemental damages in this case because, it says, the jury's award is not supportable. Zimmer's arguments as to why the jury's award is not supportable are the same ones it made it made in its Post-Trial Motion No. 8 on Damages (doc. # 454). The same reasons that compelled the Court to reject those arguments in addressing Zimmer's Post-Trial Motion No. 8 on Damages compel the Court to reject them here, as well. The methodology underlying Stryker's supplemental damages calculations is not unreasonable, just as it was not unreasonable at trial. (See Ex. B, doc. # 415-2 (setting out updated damage schedules).) Therefore, consistent with the text of the patent damages statute, the Court grants Stryker's motion for supplemental lost profit damages in the amount of $2,351,257.66.

### C. Motion for Finding of Exceptional Case and for an Award of Attorneys' Fees (doc. # 410)

Stryker's next motion is for an award of attorneys' fees under 35 U.S.C. § 285. Section 285 provides that "[t]he court in exceptional cases may award reasonable attorney fees to the prevailing party." Determining whether to award attorneys' fees under § 285 is a two-step process. *Highmark, Inc. v. Allcare Health Mgmt. Sys., Inc.*, 687 F.3d 1300, 1308 (Fed Cir. 2012). "First, [the] prevailing party must establish by clear and convincing evidence that the case is 'exceptional.'" *Id.* "Second, if the case is deemed exceptional, a court must determine whether an award of attorneys' fees is appropriate." *Id.*

There are no ironclad rules for what makes a case "exceptional." The Federal Circuit, for example, has said that "[a] case may be deemed exceptional under § 285 where there has been willful infringement, fraud or inequitable conduct in procuring the patent, misconduct during litigation, vexatious or unjustified litigation, conduct that violates Federal Rule of Civil Procedure 11, or like infractions." *MarcTec, LLC v. Johnson & Johnson*, 664 F.3d 907, 916 (Fed. Cir. 2012). Even if a case is found to be exceptional, moreover, the law gives courts considerable discretion in deciding whether to award attorney's fees. See *Bard Peripheral Vascular, Inc. v. W.L. Gore & Assocs., Inc.*, 670 F.3d 1171, 1191-92 (Fed. Cir. 2012).

Stryker argues that this case is "exceptional" for two reasons. First, it says that Zimmer's willful infringement was so pronounced as to warrant a finding of an

exceptional case. Second, it says that Zimmer's conduct of the litigation was so unreasonable and vexatious as to warrant a finding of an exceptional case. The Court need only address Stryker's first argument to find this case "exceptional." While it is true willful infringement does not *require* a finding of an exceptional case, "[d]istrict courts have tended to award attorneys' fees when willful infringement has been proven, and [the Federal Circuit] has uniformly upheld such awards." *S.C. Johnson & Son, Inc. v. Carter-Wallace, Inc.*, 781 F.2d 198, 200 (Fed. Cir. 1986). Here, the Court and the jury both found, by clear and convincing evidence, that Zimmer willfully infringed the 329, 807, and 383 patents. (See, e.g., Verdict, doc. # 381, at 6-7.) That is sufficient to support a finding of an exceptional case. *Modine Mfg. Co. v. Allen Grp., Inc.*, 917 F.2d 538, 543 (Fed. Cir. 1990) ("An express finding of willful infringement is a sufficient basis for classifying a case as 'exceptional,' and indeed, when a trial court denies attorney fees in spite of a finding of willful infringement, the court must explain why the case is *not* 'exceptional' within the meaning of the statute.") (emphasis in original).

Having found this case to be "exceptional," the Court must consider whether to award attorneys' fees. The decision on attorney's fees is left largely to the Court's discretion. *Bard Peripheral Vascular, Inc.*, 670 F.3d at 1191-92. Exercising that discretion, the Court concludes that an award of attorneys' fees is appropriate in this case, based on the principles animating § 285. In particular, § 285 is meant to prevent the waste of judicial resources that comes from willful infringement and the oftentimes unnecessary litigation it engenders. *Univ. of Pittsburgh*

*v. Varian Med. Sys., Inc.*, No. 08-cv-1307, 2012 U.S. Dist. LEXIS 58156, 2012 WL 1436569, at *8-*9 (W.D. Penn. Apr. 25, 2012). By pursuing this action, Zimmer has forced Stryker and this Court to expend considerable resources in the name of a case that, for the most part, was not terribly close.[5] That is the essence of the harm that § 285 was designed to remedy. See *Brooktree Corp. v. Advanced Micro Devices, Inc.*, 977 F.2d 1555, 1582 (Fed. Cir. 1992) ("The statutory purpose of such award is to reach cases where the interest of justice warrants fee-shifting."); *Central Soya Co., Inc. v. Geo. A. Hormel & Co.*, 723 F.2d 1573, 1578 (Fed. Cir. 1983) ("The purpose of § 285 is, in a proper case and in the discretion of the trial judge, to compensate the prevailing party for its monetary outlays in the prosecution or defense of the suit."). Accordingly, the Court awards Stryker its reasonable attorneys' fees.

**D. Motion for Prejudgment Interest (doc. # 399)**

Stryker's fourth motion is for prejudgment interest on: (1) the $70 million in lost profit damages the jury awarded it; (2) the $2,351,257.66 in supplemental damages the Court awards it (see Part III); and (3) its reasonable attorneys' fees (see Part IV). The patent damages statute provides that, "Upon finding for the claimant,

---

5. This is in no way a comment on the quality of Zimmer's counsel's advocacy throughout these proceedings. Counsel for Zimmer has consistently made the best of a bad case, presenting arguments that were lucid and thoughtful. The problems with Zimmer's positions lie not in the quality of counsel's advocacy, but in the flagrancy of Zimmer's underlying infringement. No advocate could rescue Zimmer from that problem.

the court shall award the claimant damages adequate to compensate for the infringement, but in no event less than a reasonable royalty for the use made of the invention by the infringer, together with interest and costs as fixed by the court." 35 U.S.C. § 284. "In the typical case an award of prejudgment interest is necessary to ensure that the patent owner is placed in as good a position as he would have been in had the infringer entered into a reasonable royalty agreement." *General Motors Corp. v. Devex*, 461 U.S. 648, 655, 103 S. Ct. 2058, 76 L. Ed. 2d 211 (1983). This is because "[a]n award of interest from the time that the royalty payments would have been received merely serves to make the patent owner whole, since his damages consist not only of the value of the royalty payments but also of the foregone use of the money between the time of infringement and the date of the judgment. *Id.* at 655-56. Despite that, an award of prejudgment interest is not mandatory. "For example, it may be appropriate to limit prejudgment interest, or perhaps even deny it altogether, where the patent owner has been responsible for undue delay in prosecuting the lawsuit." *Id.* at 657.

Zimmer argues that Stryker's undue delay in bringing this action justifies denying Stryker prejudgment interest. At the outset, it is not at all clear that Stryker's delay was "undue." For example, although some low level Stryker employees tested the allegedly infringing products in 2000, there is no evidence that anyone at Stryker with a knowledge of that company's patents knew of the infringing devices before 2005, by which time Stryker was on the verge of receiving additional patent protection (the '383 patent). Less than two years later, Zimmer recalled

its infringing products, shut down its manufacturing facilities, and abandoned the market until December of 2008, during which time there was no reason for Stryker to pursue an infringement claim. For those reasons, Stryker's delay in bringing this suit is not necessarily undue, as Zimmer assumes.

Furthermore, no court has ever said that any kind of delay in filing suit *requires* a denial of prejudgment interest. See, e.g., *Devex*, 461 U.S. at 657 ("[I]t *may* be appropriate to limit prejudgment interest, or perhaps even deny it altogether, where the patent owner has been responsible for undue delay in prosecuting the lawsuit.") (emphasis added). Quite the opposite, courts have routinely noted that denial of prejudgment interest is the exception, not the rule, because denying prejudgment interest thwarts § 284's overriding aim of affording patent holders complete compensation. See, e.g., *Bio-Rad Labs., Inc. v. Nicolet Instrument Corp.*, 807 F.2d 964, 967 (Fed. Cir. 1986) ("The normal procedure under *Devex* is to award prejudgment interest from the date of infringement to the date of payment, since only such award will satisfy 'Congress' overriding purpose [in section 284] of affording patent owners complete compensation.'") (quoting *Devex*, 461 U.S. at 655); *Sensonics, Inc. v. Aerosonic Corp.*, 81 F.3d 1566, 1574 (Fed. Cir. 1996) ("[P]rejudgment interest is the rule, not the exception."). There must be something exceptional about Stryker's delay, therefore, to justify denying it prejudgment interest.

One thing that could make a delay in filing suit "exceptional" would be if the delay actually harmed the

infringer. Indeed, in the vast majority of cases where courts have declined to award prejudgment interest, they appear to have done so either because the plaintiff's delay in filing suit prejudiced the defendant or because the plaintiff harmed the court and the defendant by failing to comply with court orders after filing the suit. See, e.g., *Crystal Semiconductor Corp. v. TriTech Microelectronics Int'l, Inc.*, 246 F.3d 1336, 1362 (Fed. Cir. 2001) (prejudgment interest denied because plaintiff engaged in self-serving litigation tactics that prejudiced defendant); *Minemyer v. R-Boc Representatives, Inc.*, No. 07-C-1763, 2012 U.S. Dist. LEXIS 87915, 2012 WL 2423102, at *3 (N.D. Ill. June 26, 2012) (prejudgment interest denied where plaintiffs failure to comply with court orders caused three year delay of trial). But where the infringer is not prejudiced by the patentee's delay in filing suit and the patentee proceeded responsibly after filing suit, it is difficult to discern a good reason to deny prejudgment interest, especially given § 284's compensatory aim. After all, the delay does not harm the infringer financially. To the contrary, the principal financial consequence of a patentee's delay in filing suit is that the infringer gets to keep and make use of the proceeds from infringement for a longer period of time. See *In the Matter of Mahurkar Double Lumen Hemodialysis Catheter Patent Litig.*, 831 F. Supp. 1354, 1394 (N.D. Ill. 1993). Thus, unless there is some legitimate reason to punish the patentee for its delay in filing suit—as, for example, where the patentee's delay unduly prejudices the infringer—the Court sees no reason to withhold prejudgment interest. As Zimmer has not demonstrated that Stryker's delay in filing suit prejudiced it in any meaningful way, prejudgment interest is appropriate here.

That leaves two questions. First, at what rate should prejudgment interest be calculated? The case law makes clear that determining the appropriate rate is largely left to the Court's discretion. See, e.g, *Uniroyal, Inc. v. Rudkin-Wiley Corp.*, 939 F.2d 1540, 1545 (Fed. Cir. 1991) ("A trial court is afforded wide latitude . . . and may award interest at or above the prime rate."). In this case, Stryker has proposed that interest be awarded at a rate of 3.83%, reflecting Stryker's weighted-average interest rate, excluding required fees, for all its borrowing during the damages period. The Court believes that rate is a reasonable one, insofar as it fairly accounts for what Stryker has shown it ultimately paid to borrow money it would have had absent Zimmer's infringement.[6] (See Lawton Decl., doc. # 400-1, at ¶¶ 9, 12.) Zimmer argues that there is no evidence Stryker would have borrowed money even had Zimmer not infringed, but that argument is entirely speculative. The fact that Stryker chose not to use the cash it had available during the damages period to avoid borrowing does not mean it would have borrowed had it had the additional $70 million in lost profits on hand. On top of that, Stryker's proposed rate is considerably below the prime rate, which courts routinely use when calculating prejudgment interest. See, e.g., *Trading Techs., Int'l v. eSpeed, Inc.*, No. 04-C-5312, 2008 U.S. Dist. LEXIS 8764, 2008 WL 345604, at *11 (N.D. Ill. Feb. 5, 2008) ("In determining the rate of prejudgment interest awards in patent infringement cases, courts in this circuit

---

6. Zimmer argues that Stryker has not adequately shown that it borrowed money at the rate it claims. In this respect, however, the report of Stryker's damages expert suffices to establish that Stryker's weighted-average interest rate was 3.83%.

have routinely used the prime rate."). Thus, prejudgment interest will be calculated at a rate of 3.83%.

The other remaining question is whether interest will be compounded monthly, as Stryker requests, or quarterly, as Zimmer suggests. Resolution of this question, also, is left largely to the Court's discretion. See *Bio-Rad Labs., Inc. v. Nicolet Instrument Corp.*, 807 F.2d 964, 969 (Fed. Cir. 1986) ("The rate of prejudgment interest and whether it should be compounded or uncompounded are matters left largely to the discretion of the district court."). Zimmer's argument that interest should be compounded quarterly is based on the fact that Davol pays Stryker a royalty for use of a Stryker patent on a quarterly basis. But the damages in this case are for lost profits from infringing sales, not loss of a reasonable royalty, and Stryker accumulates sales revenue for its patented devices on a daily, not quarterly, basis. From that vantage point, then, Stryker's proposal that interest be compounded monthly is conservative. The Court agrees with Stryker, then, that compounding interest on a monthly basis is appropriate in this case. As such, Stryker is entitled to an award of $11,167,670.50 in prejudgment interest on the jury award and supplemental lost profit damages Stryker incurred from December 1, 2012 to February 28, 2013. In addition, for the same reasons the Court found this to be an "exceptional case," the Court awards Stryker additional prejudgment interest, calculated at a rate of 3.83% and compounded monthly, on its reasonable attorney's fees. See *Mathis v. Spears*, 857 F.2d 749, 761 (Fed. Cir. 1988) ("[A] district court does have authority, in cases of bad faith or other exceptional circumstances,

to award prejudgment interest on the unliquidated sum of an award made under Section 285.").

**E. Motion for Enhanced Damages (doc. # 405)**

Stryker's final motion is for enhanced damages under 35 U.S.C. § 284, based on Zimmer's willful infringement. Under § 284, "the court may increase the damages up to three times the amount found or assessed" at trial. 35 U.S.C. § 284; *Bard Peripheral Vascular, Inc. v. W.L. Gore & Assocs., Inc.*, 670 F.3d 1171, 1191 (Fed. Cir. 2012). Whether and to what extent enhanced damages should be awarded "remains firmly within the scope of the district court's reasoned discretion, informed by the totality of circumstances." *Bard Peripheral*, 670 F.3d at 1191. "The paramount determination in deciding to grant enhancement and the amount thereof is the egregiousness of the defendant's conduct based on all the facts and circumstances." *Read Corp. v. Portec, Inc.*, 970 F.2d 816, 826 (Fed. Cir. 1992). In evaluating the egregiousness of the defendant's conduct, courts typically rely on the nine *Read* factors, which are:

(1) whether the infringer deliberately copied the patentee's ideas or design;

(2) whether the infringer investigated the scope of the patent and formed a good faith belief that it was invalid or not infringed;

(3) the infringer's conduct during litigation;

(4) the infringer's size and financial condition;

(5) closeness of the case;

(6) duration of the infringing conduct;

(7) remedial actions, if any, taken by the infringer;

(8) the infringer's motivation for harm; [and]

(9) whether the infringer attempted to conceal its misconduct.

*Id.* at 826-27.

In this case, all nine *Read* factors favor substantial enhancement of the jury's award. As to the first factor, multiple trial witnesses testified that Zimmer deliberately copied Stryker's patented inventions. (See, e.g., Trial. Tr., doc. # 358, at 105 (testimony of Zimmer engineer and Rule 30(b)(6) witness that Zimmer copied Stryker); Olson Dep. Tr., doc. # 406-1, at 8 (testimony of Pulsavac Plus design engineer noting that use of gear drives, like the ones ultimately incorporated in the Pulsavac Plus devices, "would be probably copying").) On the second factor, Zimmer presented no evidence that it investigated the scope of Stryker's patents to form a good faith belief about invalidity or infringement, militating in favor of enhancement. The third factor also favors enhancement, to the extent Zimmer needlessly delayed in producing requested information concerning its application for a patent for the Pulsavac Plus. (See Stryker's Br. in

Support of Mot. for Enhanced Damages, doc. # 406, at 11-14 (detailing Zimmer's persistent refusal to turn over requested information).) With respect to the fourth factor, Zimmer is a multi-billion dollar company with reported annual profits in excess of three-quarters-of-a-billion dollars. (See Ex. N, doc. # 408-4.) A $70 million verdict sounds large in the abstract, but in context, it may not be enough, without enhancement, to deter infringing conduct. As to the fifth factor, as the Court noted earlier and as reflected in the jury's verdict, this was not a close case. Every major decision—from claim construction through post-verdict motions—went against Zimmer. (See, e.g., Verdict, doc. # 381 (finding for Stryker on every issue).) On the sixth factor, Zimmer's infringement spans more than a decade, from 2000 all the way through the present—a considerable amount of time. And, with respect to the seventh factor, at no point during its 12-plus years of infringement did Zimmer take any remedial action to stop infringement or mitigate damages, including during the two-plus years covered by this litigation. In fact, to this very day, Zimmer continues to manufacture and sell the infringing products. The eighth factor counsels in favor of enhancement principally because Zimmer and Stryker are the only major competitors in the orthopedic pulsed lavage device market, so that Zimmer's infringement of Stryker's patents can only have been motivated by a desire to harm Stryker by depriving it of market share. See, e.g., *Parker Hannifin Corp. v. Wix Filtration Corp.*, No. 1:07-CV-1374, 2011 U.S. Dist. LEXIS 33578, 2011 WL 976559, at *17 (N.D. Ohio Mar. 17, 2011) (motivation to take business from "fierce competitor" weighed in favor of enhanced damages). Finally, on the ninth factor, although Zimmer

did not attempt to hide the entirety of its misconduct, it did attempt to prevent Stryker from discovering certain aspects of its infringement in the run up to trial. See Stryker's Br. in Support of Mot. for Enhanced Damages, doc. # 406, at 11-14 (detailing Zimmer's persistent refusal to turn over certain requested information before trial).)

Because the *Read* factors so overwhelmingly favor enhancement, the real question here is not whether enhancement is warranted, but how much enhancement is appropriate. Given the one-sidedness of the case and the flagrancy and scope of Zimmer's infringement, the Court concludes that treble damages are appropriate here. See, e.g., *Liquid Dynamics Corp. v. Vaughan Co., Inc.*, 449 F.3d 1209, 1226 (Fed. Cir. 2006) (affirming treble damages award); *Metabolite Labs., Inc. v. Lab. Corp. of Am. Holdings*, 370 F.3d 1354, 1371 (Fed. Cir. 2004) (affirming double damages award after finding only four *Read* factors).

The last question in this case is whether Stryker is also entitled to treble damages on the Court's award of supplemental damages. The Court answers that question in the affirmative. Zimmer acknowledges that enhancement of post-verdict supplemental damages may be warranted based on "the egregiousness of the defendant's conduct based on all the facts and circumstances." *Spectralytics, Inc. v. Cordis Corp.*, 649 F.3d 1336, 1349 (Fed. Cir. 2011). In this case, the same factors that warrant treble damages on the jury's lost profits award counsel in favor of awarding treble damages on the Court's award of supplemental damages. Indeed, the case for treble damages on the

supplemental damages award is even stronger than it is for the jury's lost profits damages award, since, during the time period addressed by the supplemental damages award, Zimmer had already been found to infringe two of the three patents-in-suit, and should have been aware of the strong likelihood of an unfavorable verdict. See *Synqor, Inc. v. Artesyn Techs., Inc.*, 709 F.3d 1365, 1385 (Fed. Cir. 2013) (affirming treble damages for court's award of supplemental damages, "based on the 'egregiousness' of Defendants' conduct in continuing to sell the accused products after the jury found infringement."). At bottom, there is simply no good reason *not* to treble the award of supplemental damages here when the Court has determined that treble damages are appropriate for pre-November-30th lost profits.

**THEREFORE IT IS ORDERED THAT** Zimmer's Motions for Judgment as a Matter of Law and/or for a New Trial (doc. ## 369, 401, 425, 430, 435, 438, 442, 447, 453) are **DENIED**.

**IT IS FURTHER ORDERED THAT** Zimmer's Motion for Judgment Barring Pre-Suit Damages Pursuant to the Defense of Laches (doc. # 418) is **DENIED**.

**IT IS FURTHER ORDERED THAT** Stryker's Motion to Strike Zimmer's Supplemental Brief to Disclose the Release of the Redesigned Pulsavac Plus (doc. # 534) is **GRANTED**.

**IT IS FURTHER ORDERED THAT** Stryker's Motion for a Permanent Injunction (doc. # 396) is

**GRANTED**. Upon entry of final judgment, Zimmer will be permanently enjoined from manufacturing, marketing, or selling any products found to have infringed the 807 patent, including the infringing Pulsavac Plus products.

**IT IS FURTHER ORDERED THAT** Stryker's Motion for Supplemental Damages (doc. # 414) is **GRANTED**. Supplemental lost profit damages in the amount of $2,351,257.66 shall be included in the Final Judgment.

**IT IS FURTHER ORDERED THAT** Stryker's Motion for a Finding of Exceptional Case and for an Award of Attorneys' Fees (doc. # 410) is **GRANTED**. Zimmer shall pay Stryker its reasonable attorneys' fees.

**IT IS FURTHER ORDERED THAT** Stryker's Motion for Prejudgment Interest (doc. # 399) is **GRANTED**. Prejudgment interest of $11,167,670.50 on the jury award and supplemental lost profit damages Stryker incurred from December 1, 2012 to February 28, 2013 shall be included in the Final Judgment. In addition, Zimmer shall pay Stryker prejudgment interest, calculated at a rate of 3.83% and compounded monthly, on Stryker's reasonable attorneys' fees.

**IT IS FURTHER ORDERED THAT** Stryker's Motion for Enhanced Damages (doc. # 405) is **GRANTED**. The Court awards Stryker treble damages on the jury's $70 million verdict and on the Court's $2,351,257.66 supplemental damages award.

Final Judgment incorporating these rulings shall be entered.

**IT IS SO ORDERED.**

DATED: August 7, 2013

/s/ Robert J. Jonker
ROBERT J. JONKER
UNITED STATES DISTRICT JUDGE

## APPENDIX E — ORDER OF THE UNITED STATES DISTRICT COURT, WESTERN DISTRICT OF MICHIGAN, SOUTHERN DIVISION, FILED NOVEMBER 29, 2012

UNITED STATES DISTRICT COURT
WESTERN DISTRICT OF MICHIGAN
SOUTHERN DIVISION

CASE NO. 1:10-CV-1223

STRYKER CORPORATION, STRYKER PUERTO RICO, LTD., AND STRYKER SALES CORPORATION,

*Plaintiffs and Counter-Defendants,*

v.

ZIMMER INC., AND ZIMMER SURGICAL, INC.,

*Defendants and Counter-Plaintiffs.*

November 29, 2012, Decided
November 29, 2012, Filed

HON. ROBERT J. JONKER

**ORDER REGARDING STRYKER'S MOTION FOR PARTIAL SUMMARY JUDGMENT OF INFRINGEMENT**

Plaintiff Stryker sued Defendant Zimmer for infringing multiple claims in three of its patents: U.S.

*Appendix E*

Patent Nos. 6,022,329 ("the 329 patent"), 6,179,807 ("the 807 patent"), and 7,144,383 ("the 383 patent"). (Am. Compl., doc. # 14.) In the Motion now before the Court (doc. # 156), Stryker asserts that it is entitled to summary judgment on 21 of its 23 infringement claims. The only claims on which Stryker is not seeking summary judgment are Claim 10 (independent) and Claim 14 (dependent) of the 383 patent. The Court now grants in part and denies in part Stryker's Motion.

## I. BACKGROUND

Stryker and Zimmer manufacture pulsed lavage irrigation systems. A pulsed lavage irrigation system operates like a motorized squirt gun combined with a small suction tube. Medical professionals use pulsed lavage irrigation systems to clean wounds during surgery by spraying water onto the wound site and vacuuming excess or dirty liquid out of the wound.

Stryker owns a number of patents for its pulsed lavage irrigation systems. Three of those patents are at issue in this litigation. The 329 patent covers a pulsed irrigation handpiece with an elongate trigger, an electric motor in the handpiece, and an irrigation tube adjacent to the motor. (*See* Ex. D, doc. # 158-4, at 2.) The 383 patent describes a similar device with, among other things, a variable speed motor and a related assemblies. (*See* Ex. F, Doc. # 159-1.) The 807 patent describes a pulsed irrigation handpiece with a lock assembly at the front end that snaps shut to fasten a tip assembly to the handpiece. (*See* Ex. E, Doc. # 159-5.)

*Appendix E*

Stryker claims that Zimmer's Pulsavac Plus line of pulsed lavage irrigation systems infringes these patents. The Pulsavac Plus devices are pistol-shaped, pulsed irrigation handpieces. They present as largely indistinguishable from Stryker's pulsed lavage irrigation systems, except for a few small--but, Zimmer claims, important--differences. The question presented in this Motion is whether the differences create genuine issues of material fact for the jury as to whether Zimmer's Pulsavac Plus devices ("Pulsavac Plus" or "accused devices") infringe the patent claims at issue in the Motion. With one exception, the Court concludes that the differences do not create material issues of fact.

## II. LEGAL STANDARD

Stryker moves for summary judgment that Zimmer infringed multiple claims in the 329, 383, and 807 patents. The Court, in its *Markman* Opinion and Order, has already construed the key claim terms (*See* Op. & Order, doc. # 106.) The remaining issue is "whether all of the claim limitations are present, either literally or by a substantial equivalent." *Innovention Toys, LLC v. MGA Entm't, Inc.*, 637 F.3d 1314, 1318 (Fed. Cir. 2011). Summary judgment is proper on this question "when no reasonable jury could find that every limitation recited in the properly construed claim either is or is not found in the accused device." *Id.*

*Appendix E*

## III. ANALYSIS

Stryker claims that Zimmer's Pulsavac Plus devices infringe on three separate patents: the 329 patent, the 383 patent, and the 807 patent. The Court begins its analysis with Stryker's claim under the 329 patent.

### A. The 329 Patent

Stryker asserts that the Pulsavac Plus devices infringe Claim 2 of the 329 patent, which discloses a "pulsed irrigation surgical handpiece" having several limitations. (Ex. D, doc. # 158-4, at 2.) Zimmer disputes that the Pulsavac Plus meets three of the limitations in Claim 2: (1) an elongate trigger; (2) an electric motor in the handle; and (3) an irrigation tube in the handle adjacent to the electric motor. (Def.'s Opp., doc. # 225, at 4-11.)

With respect to the elongate trigger, Zimmer argues that the trigger on Pulsavac Plus devices is not elongate, but rather a single rocker switch consisting of two regular-sized components. The Court did not define "elongate" at claim construction because neither party sought construction of the term. By any reasonable construction of the term, however, the trigger on Zimmer's devices is elongate. The Pulsavac Plus triggers are longer than they are wide, which satisfies the normal meaning of elongate and the one now urged by Stryker. Zimmer protests that an elongate trigger must mean one that is longer than an ordinary trigger. Even assuming it is possible to give some objective and meaningful content to the term "ordinary trigger," Zimmer's argument would still fail because,

by its own design, Zimmer included a single trigger mechanism with two parts, each of which is the length of an "ordinary trigger." Considering the rocker switch trigger mechanism as a whole, it is necessarily twice the length of even Zimmer's hypothetical ordinary trigger. No reasonable jury could fail to find that the Pulsavac Plus devices meet the "elongate trigger" limitation of Claim 2 of 329 patent.

Whether the accused products have an irrigation tube "adjacent to" the motor is also a question beyond genuine factual dispute. The Court construed "adjacent" to mean "close to or lying near." (Op. & Order, doc. # 106, at 9, 11).) The irrigation tube in the Pulsavac Plus is, at most, two centimeters away from the motor. (*See* Def.'s Opp., doc. # 225, at 11.) No reasonable factfinder could say, on these facts, that a gap of two centimeters is so substantial that the tube is not "close to or lying near" the motor, especially given that the Pulsavac Plus (including tip assembly) is roughly a foot long. Zimmer effectively proposes two alternative definitions for "adjacent." (*See id.* at 10 (arguing that the motor and irrigation tube in the Pulsavac Plus are not adjacent "because (1) there is an object of like kind (drain tube) spaced between the irrigation tube and the motor; and (2) because the irrigation tube is further away from the motor than it is close to it (when measuring the total space that is available in the product for the irrigation tube").) Zimmer's proposals are untimely efforts to re-visit claim construction issues. *See Central Admixture Pharmacy Services, Inc. v. Advanced Cardiac Solutions, P.C.*, 482 F.3d 1347, 1356 (Fed. Cir. 2007) ("The district court found that ACS waived any argument with

respect to this term by failing to raise it during the claim construction phase. We agree."). Consistent with the Court's earlier construction of the term "adjacent," Stryker is entitled to summary judgment on this issue.

Zimmer's final argument on Claim 2 of the 329 patent does identify a genuine factual issue for trial. Zimmer contends that the motor in its Pulsavac Plus device is not in the handle of the unit as required by Claim 2. (Ex. D, doc. # 158-4, at 2.) At claim construction, the Court defined "handle" to mean "a portion of a device that is designed to be held by a hand or hands." (Order, doc. # 106, at 8-9.) The motor in the Pulsavac Plus is located in a nub, in roughly the same location as the hammer in a standard pistol. (*See* Ex. D, doc. # 158-4, at 2.) Whether this portion of the product was "designed to be held" is a question of fact on which reasonable jurors could disagree. Zimmer has produced evidence that would allow the jury to decide in its favor on this issue. The designed grips on the Pulsavac Plus, for example, do not extend to the nub that houses the motor, from which it may be inferred that the nub was not designed to be held. Zimmer has design witnesses that will testify in support of that inference. (*See* Def.'s Opp., doc. # 225, at 6.) As further support of its position, Zimmer can point to statements Stryker made in an effort to distinguish its own products from the prior art of the Mattchen patent. (*See id.* at 4-5.) On the other hand, there is also strong evidence that Stryker has presented to support a jury's conclusion that the nub area really does meet the "designed to be held" claim limitation. One of the Pulsavac Plus' lead designers is on record as demonstrating ways to hold the Pulsavac Plus

so that the user's hand grips the nub on the device. (*See, e.g.*, Ex. S, doc. # 164, at 5 ("I mean, you can technically say [the nub's] a handle. You might be able to palm it.").) Furthermore, Zimmer's patent application for the Pulsavac Plus says that the "barrel *grip* encloses a motor and pump assembly," suggesting that the motor is part of the grip or, in other words, part of the handle. (*See* Ex. O, doc. # 160-5.) Accordingly, the Court cannot grant summary judgment on this aspect of Stryker's Motion under Claim 2 of the 329 patent.

**B. The 383 Patent**

Stryker asserts that the Pulsavac Plus devices infringe as a matter of law on 17 separate claims under the 383 patent. Stryker's claims chart clearly and succinctly sets out the ways in which the Pulsavac Plus devices conform to each of the limitations of the asserted claims under the 383 patent. (*See* Ex. F, doc. # 159-1.) The Court agrees with Stryker's characterizations of various components of the Pulsavac Plus, and with its conclusions that those components overlap with the limitations set out in the asserted claims of the 383 patent. The Court notes that Zimmer spent none of its time at oral argument contesting Stryker's position on these claims.

Zimmer's written arguments opposing summary judgment on the asserted claims are unavailing. Zimmer argues that there is a genuine question of material fact as to what constitutes the "front end" of the Pulsavac Plus. (*See* Def.'s Opp., doc. # 225, at 19-20.) Neither party sought construction of this term, probably because

its meaning is self-evident. In any event, no reasonable factfinder could fail to conclude that the suction tube in Zimmer's Pulsavac Plus has an open end adjacent to the "fron nd"--however reasonably defined--and that the suction tube runs away from it. To find otherwise would require an impossibly cramped meaning of the term. Indeed, Zimmer impliedly adopts just such a definition by insisting that "front end" must mean something like "the end" or the lead surface of the device--effectively a single geometric plane, rather than a three dimensional region. Such an artificially limited construction has no basis in the specification, in any other intrinsic or extrinsic evidence, or in common usage and understanding. Indeed, accepting Zimmer's implicit construction of "front end" would effectively eliminate any meaningful distinction between "front end" and "front face," even though the claims do not use the terms interchangeably. Moreover, even the arguably more limited term "front face" does not in common understanding (or in any extrinsic or intrinsic evidence of record) imply a single, two-dimensional plane. A "face" may well suggest a surface, but surfaces can and do have ridges, elevations, depressions and protrusions, just like human faces, for example. (*Id.* at 13.)

In a similar vein, Zimmer argues that the plastic flange with the male nozzles is not part of the housing, but a separate molded piece, so that the water and suction tubes do not extend from the front face of the housing, but from the flange. Zimmer's argument, essentially, is that, by using a flange with nozzles to connect the irrigation and suction tubes to the tip assembly, it has side-stepped the limitations in claims 10 and 38 of the 383 patent. But

whether through a separately molded flange or otherwise, the suction tube on the accused products still has an open end adjacent to and running away from the front end. The fact that the front end of the Pulsavac Plus consists, in part, of a plastic flange does not change that. Indeed, to allow Zimmer to avoid liability for infringement based on such a minor, insignificant change would undermine fundamental protections afforded by patent law. *See Graver Tank & Mfg. Co. v. Linde Air Products Co.*, 339 U.S. 605, 608, 70 S. Ct. 854, 94 L. Ed. 1097, 1950 Dec. Comm'r Pat. 597 (1950) (making of insignificant changes to a patented device does not protect an alleged infringer from liability for damages for infringement).

Finally, Zimmer argues that the Pulsavac Plus does not include "a control assembly disposed in [the] housing," since the control assembly for the Pulsavac Plus is only "partially disposed in" the housing. (Def.'s Opp., doc. # 225, at 21-22.) Zimmer's argument rests on the assumption that "disposed" means "entirely disposed," so that if any part of a control assembly lies outside of the housing, it is not "disposed in the housing." But nothing in any of the claims of the 383 patent requires--either expressly or by implication--such a narrow, constraining definition of "disposed." There is, moreover, no evidence that such a reading is necessary or even logical in this case. Zimmer has not shown, for example, how it is of any practical significance that a fraction of the control assembly rests outside of the housing. Rather, Zimmer seems to be reading an artificial limitation into "disposed" to escape liability for infringement. No reasonable jury can read a similar limitation into the Claim 10 or any of its dependent claims.

In sum, the Court accepts Stryker's arguments regarding the claims at issue in the 383 patent because the Pulsavac Plus embodies each and every limitation disclosed in the asserted claims. Zimmer's arguments to the contrary hinge on such cramped and unreasonable interpretations or applications of the language in the 383 patent that no reasonable factfinder could find for Zimmer on any of them. Accordingly, the Court grants Stryker's Motion with respect to all asserted claims under the 383 patent.

**C. The 807 Patent**

Stryker asserts that the Pulsavac Plus devices infringe independent claim 45 of the 807 patent, and dependent claims 50-52 of the same. Zimmer disputes only that the Pulsavac Plus meets three limitations in claim 45: (1) a front end for receiving the discharge tube and the suction tube; (2) a lock assembly mounted to the front end of the body of the handpiece for releasably securing the discharge tube and the suction tube to the body of the handpiece; and (3) a discharge head disposed in the body of the handpiece, having an open end adjacent to the front end of the body of the handpiece for receiving the discharge tube. (Def.'s Opp., doc. # 225, at 12-17.)

Zimmer's arguments about the definition of "front end" are as unavailing in the context of the 807 patent as they were in the context of the 383 patent. Properly construed, the term "front end" in the 807 patent includes to the area at or near the device's leading edge. All of Zimmer's arguments that turn on the word "front" fail

under that commonsense definition. (*See, e.g.*, Def.'s Opp., doc. # 225, at 14-16.)

Zimmer claims that the Pulsavac Plus does not contain a "lock assembly" as the Court defined that term at claim construction ("components that work together to secure or fasten the tip to the handpiece"). Zimmer's argument, essentially, is that the blue ring that locks the tip assembly to the handpiece of the Pulsavac Plus is only one component, and that the Court's definition requires a second. That argument ignores the grooves in the handpiece of the Pulsavac Plus, without which the blue ring would be totally ineffective. A component is reasonably defined as a constituent part or feature, and the grooves carved into the body of the Pulsavac Plus meet that definition. Nothing in the Court's construction of "lock assembly" required that the components be separate from the handpiece, as Zimmer seems to suggest. Thus, a reasonable factfinder could not conclude that the Pulsavac Plus lacks a lock assembly.

Zimmer argues that the Pulsavac Plus does not contain a discharge head to "receive" the discharge tube from tip because the Pulsavac Plus handpiece has male, not female, connectors. Zimmer suggests this means that the Pulsavac Plus' handpiece does not "receive" the tip assembly, but is inserted into the tip assembly. On its face, Zimmer's reading of "receive" is artificially narrow. Nothing about the word "receives" requires a certain type of connector. The word "receives" in this context can only mean that one part of the device connects directly with another part of the device. There is no genuine issue of

fact about whether the front end of the Pulsavac Plus handpiece "receives" the tip assembly in this sense. It plainly does.

Finally, Zimmer claims that the Pulsavac Plus devices do not contain "a single piece drain tube . . . having a front end . . . adjacent the front end of [the handpiece's] body." To make that argument, Zimmer relies on readings of "adjacent" and "front end" rejected by the Court elsewhere in this Order. Those readings are no more appropriate in this context than they were in the earlier contexts in which the Court rejected them.

**ACCORDINGLY, IT IS ORDERED** that Stryker's Motion for Partial Summary Judgment of Infringement is **GRANTED** with respect to the 383 and 807 patents.

**IT IS FURTHER ORDERED** that Stryker's Motion for Partial Summary Judgment of Infringement of the 329 patent is **DENIED** on the issue of whether the Pulsavac Plus devices include a motor in the handle of the device, but **GRANTED** in all other respects.

Dated: November 29, 2012

/s/ Robert J. Jonker
ROBERT J. JONKER
UNITED STATES
DISTRICT JUDGE

## APPENDIX F — MEMORANDUM OPINION AND ORDER OF THE UNITED STATES DISTRICT COURT FOR THE WESTERN DISTRICT OF MICHIGAN, SOUTHERN DIVISION, FILED FEBRUARY 1, 2012

UNITED STATES DISTRICT COURT
WESTERN DISTRICT OF MICHIGAN
SOUTHERN DIVISION

STRYKER CORP., *et al.*,

*Plaintiffs/Counter-Defendants,*

v.

ZIMMER, INC., *et al.*,

*Defendants/Counter-Plaintiffs.*

CASE NO. 1:10-cv-1223

HON. ROBERT J. JONKER

### CLAIM CONSTRUCTION MEMORANDUM OPINION AND ORDER

### INTRODUCTION

This is a patent infringement case. Stryker Corporation, Stryker Puerto Rico, Ltd., and Stryker Sales Corporation (collectively, "Stryker") allege that Zimmer Inc. and Zimmer Orthopaedic Surgical Products (collectively, "Zimmer") are infringing one or more of three Stryker patents, including U.S. Patent Nos.

6,022,329 (the "'329 patent"), 6,179,807 (the "'807 patent"), and 7,144,383 (the "'383 patent"). (Compl., docket #1, ¶¶ 11-13.) Both companies work in the medical technology field, developing and marketing products relating to various medical specialities. (*Id.* ¶¶ 6-10.) The patents at issue in this case pertain to pulsed lavage irrigation systems, which are commonly used in orthopedic surgeries and wound management to remove blood and other debris from surgical sites. (Stryker's Br., docket # 66, at 5.)

At the Court's invitation, the parties have identified terms for which they believe construction is most important to advance the case, and they have proposed competing constructions of most of these terms. (Jt. State., docket # 61.) The Court heard oral argument on the parties' proposed constructions on January 18, 2012. This Claim Construction Memorandum contains the Court's construction of these disputed terms.

## CLAIM CONSTRUCTION PRINCIPLES

When the meaning of a claim's language is disputed, the court must construe the claim as a matter of law. *Markman v. Westview Instruments, Inc.*, 52 F.3d 967, 979 (Fed. Cir. 1995) (en banc), *aff'd* 517 U.S. 370, 116 S. Ct. 1384, 134 L. Ed. 2d 577 (1996). Proper claim construction begins with the language of the claims themselves. *See Vitronics Corp. v. Conceptronic, Inc.*, 90 F.3d 1576, 1582 (Fed. Cir. 1996). "'In construing claims, the analytical focus must begin and remain centered on the language of the claims themselves, for it is that language that the patentee chose to use to particularly point[] out and distinctly claim[] the subject matter which the patentee

regards as his invention. 35 U.S.C. § 112, ¶ 2.'" *Brookhill-Wilk 1, LLC v. Intuitive Surgical, Inc.*, 334 F.3d 1294, 1298 (Fed. Cir. 2003) (quoting *Interactive Gift Express, Inc. v. Compuserve, Inc.*, 256 F.3d 1323, 1331 (Fed. Cir. 2001) (internal quotations omitted)). The Court must give claim terms the ordinary and customary meaning ascribed to them by "a person of ordinary skill in the art in question at the time of the invention, i.e, as of the effective filing date of the patent application." *Phillips v. AWH Corp.*, 415 F.3d 1303, 1313 (Fed. Cir. 2005) (en banc).

When interpreting a claim as understood by a person of ordinary skill in the art, the court first examines the intrinsic evidence before it, which includes not only the claim language, but also the written description and the prosecution history of the patent. *Phillips*, 415 F.3d at 1319. Terms that have a plain and ordinary meaning typically do not need to be construed, as their meaning is clear from the term itself. *See Finjan, Inc. v. Secure Computing Corp.*, 626 F.3d 1197, 1207 (Fed. Cir. 2010). A court considers the written description "because it is relevant not only to aid in the claim construction analysis, but also to determine if the presumption of ordinary and customary meaning is rebutted." *Brookhill-Wilk 1, LLC*, 334 F.3d at 1298. In fact, the specification is usually "the single best guide to the meaning of a disputed term." *Vitronics*, 90 F.3d at 1582. The prosecution history may also be considered to "inform the meaning of the claim language by demonstrating how the inventor understood the invention and whether the inventor limited the invention in the course of prosecution, making the claim scope narrower than it would otherwise be." *Phillips*, 415 F.3d at 1317.

*Appendix F*

A court may also consider extrinsic evidence, such as dictionaries, treatises, and expert or inventor testimony, in construing patent claims. *See id.* Technical dictionaries may help a court understand "the meaning of particular terminology to those of skill in the art of the invention." *Id.* at 1318. Likewise, expert testimony may be useful for explaining the technology at issue and how the particular invention works, to ensure that the court's understanding of the technical aspects of the patent is consistent with that of a person of ordinary skill in the art, or to establish that a particular claim in the patent or in prior art has a particular meaning in the pertinent field. *See id.*

While a court may consider both intrinsic and extrinsic evidence, intrinsic evidence is generally more reliable and thus generally entitled to greater weight when construing a claim term. *See id.* at 1320-21. What ultimately controls, however, is the language of the claims themselves: "[T]he court's focus [must] remain[] on understanding how a person of ordinary skill in the art would understand the claim terms." *Id.* at 1323. Thus, "'[t]he construction that stays true to the claim language and most naturally aligns with the patent's description of the invention will be, in the end, the correct construction.'" *Id.* at 1316 (quoting *Renishaw PLC v. Marposs Societa' per Azioni*, 158 F.3d 1243, 1250 (Fed. Cir. 1995)).

*Appendix F*

## CLAIM ANALYSIS

### 1. *'329 Patent, Claim 2: "trigger"*

The parties propose the following constructions of the term "trigger" as it appears in claim 2 of the '329 patent:

| Claim Term | Stryker's Proposed Claim Construction | Zimmer's Proposed Claim Construction |
|---|---|---|
| '329, col.22, l.3: an elongate trigger movably mounted on said housing; | A lever pulled by a finger or fingers to activate a device or mechanism (Jt. State., docket # 61.) | Resilient lever designed to be pulled in a single direction (Jt. State., docket # 61.) |

The parties agree that a trigger in claim 2 is a lever pulled by a user. (Zimmer's Br., docket # 76, at 9.) The parties also agree that the purpose of the trigger is "to activate a device or mechanism," although Zimmer argues that the inclusion of this stated purpose "is an unnecessary addition to the definition." (*Id.* at 9 n.4.(citing *Symantec Corp. v. Computer Assocs. Int'l, Inc.*, 522 F.3d 1279, 1288 (Fed. Cir. 2008) (holding that claim language stating a "purpose or intended use," often found in the preamble, is typically not limiting))). The issue is whether the trigger in claim 2 must "inherently return[] to its initial, resting position once the pulling force has been removed." (*Id.*)

*Appendix F*

Zimmer argues that "unidirectional pulling and resiliency are characteristics inherent to a trigger." (*Id.* at 10.) Zimmer's bases this argument largely on the '329 patent specification, which describes a "trigger lever 242 . . . bendable . . . in a resilient manner," and that "[u]pon release of the trigger by the user, the natural resilience of the trigger lever 242 unbends it back to its . . . forward position . . . without need for a separate return spring." ('329 patent, docket # 77-1, at 13:39-56.) Stryker counters that a person of ordinary skill in the art would understand the "trigger" to describe any lever that could be pulled to operate a device or mechanism without necessarily returning to its resting position after being pulled by a user, and that Zimmer's construction is improperly limited to "the precise embodiment described in the specification." (docket #66, at 12.)

The starting point is the language of claim 2 itself. *See Phillips*, 415 F 3d at 1317. Nothing in the language of claim 2 requires the trigger to be resilient. (docket # 77-1, at 22:3.) The only word directly modifying "trigger" is "elongate," which in no way requires or implies resilience. To the extent the specification describes resilience as one feature of the trigger on the preferred embodiment, the absence of any resilience requirement in the claim itself suggests that Stryker in no way meant to limit the trigger in claim 2 to resilient, elongate triggers, as opposed to all elongate triggers. The Federal Circuit has made clear that "one of the cardinal sins of patent law . . . [is] reading a limitation from the written description into the claims." *Phillips*, 415 F.3d at 1319-20; *see also Agfa Corp. v. Creo Prods. Inc.*, 451 F.3d 1366, 1376 (Fed. Cir. 2006) ("As noted, this court has repeatedly rejected the contention that

depiction of a single embodiment in a patent necessarily limits the claims to that depicted scope."). While the trigger lever 242 described in the specification is made of a resilient plastic material that allows it to return to its original resting position after being released by a user, it is the function of the trigger—to engage the motor and allow for "power pulsing" of the wound site—that defines it and sets it apart from other types of levers (resilient or otherwise). Contrary to Zimmer's position, the inclusion of the trigger's function is a necessary and appropriate component of its definition, and the addition of the word "resilient" is not.

The extrinsic evidence also supports Stryker's proposed construction. For example, the dictionary definition discussed in both parties' briefs defines "trigger" as "1. The lever pressed by the finger to discharge a firearm. 2. Any similar device used to release or activate a mechanism." AMERICAN HERITAGE ILLUSTRATED ENCYCLOPEDIC DICTIONARY 1758 (1987). Although the firearm provides a helpful illustration of a trigger, the definition of trigger is obviously not limited to firearm applications. Rather, the term is used to describe any similar lever that releases or activates a mechanism. *See also* CHAMBERS CONCISE DICTIONARY 1141 (1991) (defining "trigger" as "a lever that releases a catch so as to fire a gun or set a mechanism going; anything that starts a train of actions"); WEBSTER'S NINTH NEW COLLEGIATE DICTIONARY 1261 (1991) (defining a "trigger" as a "movable part by which a mechanism is actuated"). The prior art is full of examples of the term "trigger" being used in a variety of applications that do not necessarily incorporate inherent resilience into the definition. (docket

## 87-91, Exs. O-AA.)[1] Therefore, the Court is persuaded that a person of ordinary skill in the art would construe "trigger" consistent with Stryker's proposed definition, and not the narrower definition Zimmer advocates. The Court therefore adopts Stryker's proposed construction of the term.

*2. '329 Patent, Claim 2: "handle"*

The parties propose the following constructions of the term "handle" as it appears in claim 2 of the '329 patent:

| Claim Term | Stryker's Proposed Claim Construction | Zimmer's Proposed Claim Construction |
|---|---|---|
| '329, col.22, l.2: a hollow housing comprising a handle; | A portion of a device designed to be held by a hand or hands. (Jt. State., docket # 61.) | Plain and ordinary meaning; no construction necessary (Jt. State., docket # 61.) |

The first question is whether to construe the term at all. Zimmer argues that no construction is required because the term "has a well-understood meaning that is clear to persons of ordinary skill in the art," and that "fact and expert witnesses are capable of proffering testimony

1. Indeed, as Stryker notes in its Reply Brief, Zimmer's own engineering and marketing materials relating to the allegedly infringing device appear to treat its device's rocker switch as a type of trigger even though it is not resilient. (docket # 86, at 6.) This is obviously not dispositive, though it provides further confirmation of the Court's construction in this case.

regarding whether an accused product satisfies the term handle, so the jury can decide the fact inquiry." (docket # 76, at 11.) Consequently, Zimmer does not propose a claim construction. Stryker argues a construction is necessary, given the parties' inability to agree on the term's meaning in this case. (docket # 66, at 13.)

"When the parties raise an actual dispute regarding the proper scope of . . . [a] claim[], the court, not the jury, must resolve the dispute." *O2 Micro Int'l Ltd. v. Beyond Innovation Tech. Co.*, 521 F.3d 1351, 1360 (Fed. Cir. 2008). "In some cases, the ordinary meaning of claim language . . . may be readily apparent even to lay judges, and claim construction in such cases involves little more than the application of the widely accepted meaning of commonly understood words." *Id.* (citing *Phillips*, 415 F.3d at 1312-13). It is true in this case that Stryker to some extent relies on plain and ordinary meaning even though it advocates construction of the term. But construction is still appropriate because Zimmer argues the plain and ordinary meaning of the term necessarily excludes something Stryker claims for it. Because the parties disagree, claim construction is required.

At issue is claim 2 of the '329 patent, which provides that the claimed "pulsed irrigation surgical handpiece" includes "a hollow housing comprising a handle; . . . an irrigation liquid tube extending along said handle; [and] an electric motor spaced between the top and bottom of said handle and located in said handle . . . ." (docket # 77-1, at 22:1-8.) Stryker argues the claim language and specification "supports a broad construction of 'handle' according to its plain and ordinary meaning." (docket # 66,

at 13.) Specifically, Stryker constructs "handle" to mean "a portion of a device designed to be held by a hand or hands." (*Id.*) Zimmer objects to Stryker's construction because it would impermissibly construe "handle" to "read not only on the handle but also on what one of ordinary skill in the art would understand to be the barrel of a pistol-shaped device." (docket # 76, at 12.)

The Court adopts Stryker's proposed claim construction. According to the specification, "[t]o use the apparatus for irrigation of a surgical site, the user grips the handpiece, either by the handle 12, in a pistol-like manner, or where the barrel 13 joins the handle 12, in a wand like manner." (docket # 77-1, at 20:48-51.) A person of ordinary skill in the art would interpret the specification consistent with Stryker's position—that the irrigation device's handle is the portion of the device designed to be held by a hand. The '329 claim language also supports this interpretation, as claim 2 does not necessarily require the inclusion of a barrel, which is a feature of the preferred embodiment that appears to be captured in dependent claim 4. (*Id.* at 22:1-42.) Moreover, despite Zimmer's concerns, Stryker's construction would not necessarily include the definition "barrel 13" within the definition of "handle 12." Rather, it would depend on whether the barrel 13 of an allegedly infringing product was "designed to be held by a hand"—a question that the Court leaves for subsequent motion practice and, as necessary, trial.[2] Finally, the Stryker construction is also

2. The Court does not rely on Stryker's argument based on Figure 4 of the '329 patent. (docket # 66, at 13.) In Figure 4, the term "housing handle" is identified with specification reference numerals 11, 12, and 15, which Stryker argues is persuasive

consistent with the extrinsic evidence. *See, e.g.*, WEBSTER'S UNABRIDGED DICTIONARY 642 (1989) (defining "handle" to mean "a part of a thing made specifically to be grasped or held by the hand"); WEBSTER'S NINTH NEW COLLEGIATE DICTIONARY 550 (1991) (defining "handle" to mean "a part that is designed especially to be grasped by the hand.")

*3. '329 patent, Claim 2: "adjacent"*

The parties propose the following constructions of the term "adjacent" as it appears in claim 2 of the '329 patent:

| Claim Term | Stryker's Proposed Claim Construction | Zimmer's Proposed Claim Construction |
|---|---|---|
| '329, col.22, l.5-7: an electric motor spaced between the top and bottom of said handle and located in said handle adjacent said irrigation tube; | Close to or lying near (Jt. State., docket # 61.) | Plain and ordinary meaning; no construction necessary (Jt. State., docket # 61.) |

---

intrinsic evidence in support of its position. (*Id.*) The use of "handle" in these discrete instances appears to be a typographical error. Indeed, other than the instances cited in Stryker's brief, reference numeral 11 is consistently defined as the "housing" throughout the '329 specification, and numerals 12 and 15 are used to describe the left- and right-hand sides of the housing, and not component parts of the "handle." (*See, e.g.*, docket # 67-2, '329 patent, at 3:28-39.)

Once again, the parties dispute whether this term requires construction. Zimmer argues that construction is not necessary because Stryker's definition simply "replaces one commonly word with several." (docket # 76, at 17.) Stryker counters that its proposed definition is consistent with the term's plain meaning and the evidence of record, and that because Zimmer refuses to adopt the construction, a dispute exists as to the term's definition, which creates a question that the Court must address as a matter of law. (docket # 66, at 15-16.) Because a claim construction dispute exists, and for the reasons discussed above in the context of the Court's "handle" analysis, the Court engages in a claim construction analysis of "adjacent." *See O2 Micro Int'l Ltd.*, 521 F.3d at 1360.

Here, Stryker's proposed construction of "adjacent" as "close to or lying near" is consistent with the claim language and the specification. The preferred embodiment in the specification describes a "DC energizable electric motor 36" that "is snugly housed in the space between the left and right . . . shell parts 30 and 31" that surround the motor 36, and a liquid hose 160 that is located between the shell parts 30 and 31 and the housing 11. (docket # 77-2, at fig. 4, 4:1-8, 9:40-58.) The claim language describes an electric motor that is located within the handpiece's handle "adjacent said irrigation tube." (*Id.* at 22:5-7.) Nothing in the intrinsic—or extrinsic evidence for that matter—reveals any reason to deviate from the meaning of the word routinely used in other constructions. Courts routinely construct terms such as "adjacent," often providing definitions similar to what has been advocated here. *See, e.g., Free Motion Fitness, Inc. v. Cybex Int'l, Inc.*, 423 F.3d 1343, 1348-49 (Fed. Cir. 2005) (construing

"adjacent" as "not distant"); *Totes Isotoner Corp. v. Panther Vision, LLC*, No. 09-cv-1604, 2010 U.S. Dist. LEXIS 14, 2010 WL 55673, at *10 (N.D. Ill. Jan. 4, 2010) (construing "adjacent" as "closely proximate"); *Aero Indus., Inc. v. Quick Draw Tarpaulin Sys., Inc.*, No. 1:05-cv-0439, 2009 U.S. Dist. LEXIS 25978, 2009 WL 838684, at *11 (S.D. Ind. Mar. 27, 2009) (construing "adjacent" to mean "close to, next to, or lying near"); *Bridgelux, Inc. v. Cree, Inc.*, No. 9:06-cv-240, 2008 U.S. Dist. LEXIS 43821, 2008 WL 2325623, at *10-*11 (E.D. Tex. June 3, 2008) (construing "adjacent" to mean "near or next to"). The parties are then required to provide competent testimony as to how a person of ordinary skill in the art interprets "adjacent," "close to," or "lying near" in the technology at issue—in this case, pulsed lavage irrigation systems.

Zimmer asserts that because the irrigation handpiece at issue is by its nature compact and self-contained, adopting Stryker's definition "would effectively read the [adjacent] limitation[] out of the claim," and that "Stryker could argue that virtually all the parts are close to or near to one another." (docket # 76, at 17.) Zimmer's concern is without merit. As the Federal Circuit has repeatedly emphasized, claim construction must be consistent with the understanding of "a person of ordinary skill in the art in question at the time of the invention." *Phillips*, 415 F.3d at 1312. In other words, the term "adjacent" is not interpreted in a vacuum, but rather is informed by the field of technology, what is considered common knowledge in the field, and the invention itself. *See id.* For example, what constitutes "close" in horseshoes is markedly different than when dealing with hand grenades. Context makes all the difference.

Accordingly, the Court adopts Stryker's proposed construction of the claim term.

*4. '807 Patent, Claim 45: "lock assembly"*

| Claim Term | Stryker's Proposed Claim Construction | Zimmer's Proposed Claim Construction |
|---|---|---|
| '807, col.27, l.35-37: a lock assembly mounted to the front end of said body for releasably securing the discharge tube and the suction tube to said body; | Components that work together to secure or fasten the tip to the hand piece (Jt. State., docket # 61.) | Subject to 35 U.S.C. § 112 ¶ 6.<br>Function: releasably securing the discharge tube and the suction tube to said body<br>Structure: a tip lock, a spring plate, a biasing bar, and a flange on a tip assembly (Jt. State., docket # 61.) |

Claim 45 of the '807 patent provides for "a lock assembly mounted to the front end of said body for releasably securing the discharge tube and the suction tube of said body." ('807 patent, docket # 77-2, at 27:35-37.) The basic dispute here is whether the "lock assembly" of claim 45 is subject to a means-plus-function analysis under 35 U.S.C. § 112 ¶ 6. Zimmer argues that a person of ordinary skill in the art would not understand "lock assembly" to connote structure, and that as a result, the

claimed structure must be limited to the embodiment disclosed in the specification—a tip lock, spring plate, biasing bar, and flange that work together to secure the tip assembly to the body of the irrigation handpiece. (docket # 61.) Stryker counters that a person of ordinary skill would understand "lock assembly" as a structural term, and that section 112 ¶ 6 does not apply. Instead, Stryker broad construes "lock assembly" as "components that work together to secure or fasten the tip to the hand piece." (*Id.*)

The Court first considers whether the "lock assembly" in claim 45 is indeed structural under section 112 ¶ 6, which provides that:

> [a]n element in a claim for a combination may be expressed as a means or step for performing a specified function without the recital of structure, material, or acts in support thereof, and such claim shall be construed to cover the corresponding structure, material, or acts described in the specification and equivalents thereof.

35 U.S.C. § 112 ¶ 6. This type of claim analysis applies to "purely functional limitations that do not provide the structure that performs the recited function," *Phillips*, 415 F.3d 1311, which generally includes the hallmark "means" language that creates a rebuttable presumption that section 112 ¶ 6 applies. *See Personalized Media Commc'n, LLC v. Int'l Trade Comm'n*, 161 F.3d 696, 703-04 (Fed. Cir. 1998). "By contrast, a claim term that does

not use 'means' will trigger the rebuttable presumption that section 112 ¶ 6 does not apply." *Apex Inc. v. Raritan Computer, Inc.*, 325 F.3d 1364, 1371-72 (Fed. Cir. 2003) (citations omitted). "When a claim terms lacks the word 'means,' the presumption can be overcome if the challenger demonstrates that 'the claim term fails to recite sufficiently definite structure or else recites function without reciting sufficient structure for performing that function." *Thyssenkrupp Elevator Ams. Corp.*, 649 F.3d 1350, 1356 (Fed. Cir. 2011). "[T]he presumption flowing from the absence of the term 'means' is a strong one that is not readily overcome." *Id.; see also Lighting World, Inc. v. Birchwood Lighting, Inc.*, 382 F.3d 1354, 1362 (Fed. Cir. 2004) ("[W]e have seldom held that a limitation not using the term 'means' must be considered to be in means-plus-function form. In fact, we have identified only one published opinion since [*Greenberg v. Ethicon Endo-Surgery, Inc.*, 91 F.3d 1580 (Fed. Cir. 1996)] in which we have done so.") Given the absence of any "means" language with respect to the "lock assembly" term in claim 45, Zimmer bears the burden of overcoming the presumption against applying section 112 ¶ 6—a burden it fails to carry in this case.

Zimmer argues that the Court must engage in a mean-plus-function analysis because "lock assembly" is simply too indefinite if not limited to the structure explicitly disclosed in the '807 patent specification. (docket # 76, as 19.) This argument is unavailing. As the Federal Circuit explained in *Lighting World, Inc. v. Birchwood Lighting, Inc.*,

*Appendix F*

> In considering whether a claim term recites sufficient structure to avoid application of section 112 ¶ 6, we have not required the claim term to denote a specific structure. Instead, we have held that it is sufficient if the claim term is used in common parlance or by persons of skill in the pertinent art to designate structure, even if the term covers a broad class of structures and even if the term identifies structures by their function.

382 F.3d at 1360 (citations omitted). In *Lighting World*, the Court recognized the possibility that applying these principles may result in a broad construction of a particular claim term that "renders a claim more vulnerable to attack for invalidity, but that the risk is one that the "claim drafter assumes by choosing broad structural terms rather than choosing to claim in means-plus-function format." *Id.* at 1362.

Applying these rules of construction to the "lock assembly" in claim 45, the Court concludes that a person of ordinary skill would understand "lock assembly" to connote structure, and section 112 ¶ 6 therefore does not apply. Claim 45 provides for "a lock assembly mounted to the front of said body for releasably securing the discharge tube and the suction tube to said body." (docket # 77-2, at 27:35-37.) A person of ordinary skill in the art would understand this claim term as describing a structure that locks the tip assembly 30 to the handpiece 22 of the irrigation system. (*Id.* at 10:12-13.) While Zimmer correctly notes that the term would cover a broad range

of structures if not subject to section 112 ¶ 6, the term is structural nonetheless. Consequently, the Court declines to apply the section 112 ¶ 6 analytical framework to "lock assembly" or otherwise limit its scope to the embodiment disclosed in the specification.

Zimmer's reliance on *Toro Co. v. Deere & Co.*, 355 F.3d 1313 (Fed. Cir. 2004), is unavailing. In *Toro*, the Federal Circuit held that the term "control mechanism" as used in the patent at issue did not provide sufficient structural description for a person of ordinary skill in the art to understand its meaning to connote structure. *Id.* at 1325. Zimmer attempts to analogize *Toro* to the present case, arguing that the "lock assembly" in claim 45 similarly lacks structure. This analogy fails to persuade the Court for two reasons. First, unlike the "lock assembly" in the '807 patent, the patentee in *Toro* used the terms "control means" and "control mechanism" interchangeably in the claim language, leading the court to conclude section 112 ¶ 6 applies. *Id.* at 1323, 1325. In other words, the intrinsic evidence provided a clear indication that "control mechanism" was not a structural term, but was rather a functional limitation synonymous with "control means." Here, Stryker gave no such indication in the '807 claim language, as it did not use "lock assembly" interchangeably with "locking means" anywhere in the '807 patent. Second, when construing "assembly" in a variety of mechanical and electrical applications, courts have consistently held that "assembly" connotes sufficient structure to avoid section 112 ¶ 6. *See, e.g., Kegel & Co. v. AMF Bowling, Inc.*, 127 F.3d 1420, 1427 (Fed. Cir. 1997); *Alto-Shaam, Inc. v. Cleveland Range, LLC*, No. 7:09-cv-018, 2010 U.S.

Dist. LEXIS 56857, 2010 WL 2382249, at *16-*18 (N.D. Tex. June 7, 2010); *Fitness Quest Inc. v. Monti*, No. 5:06-cv-2691, 2007 U.S. Dist. LEXIS 60[illegible]95, 2007 WL 2359821, at *8 (N.D. Ohio Aug. 16, 2007). Indeed, in *Lighting World* (which was decided after *Toro)*, the Federal Circuit held "connector assembly" was structural, and that the term should not be limited to the structure disclosed in the specification. 382 F.3d at 1363. While not dispositive, these other constructions further support the Court's conclusion, as do dictionary definitions, which define "assembly" as a noun connoting structure. *See, e.g.*, AMERICAN HERITAGE ILLUSTRATED ENCYCLOPEDIC DICTIONARY 42 (1987).

Although section 112 ¶ 6 does not apply, the Court must still provide a claim construction of the term. The '807 specification explains that a common problem with prior surgical irrigation handpieces was their tendency to leak during use. (docket # 77-2, at 1:59-2:6.) According to the specification, leakage was particularly common when the handpiece's tip assembly was subject to side loading. (*Id.*) To address this problem, the '807 patent provides for a lock assembly that secures the tip assembly 30 to the handpiece 22. (*Id.* at 10:13-14.) The preferred embodiment teaches a tip assembly 30 that is pushed towards the handpiece 22 until the flange 186 of the discharge tube 32 passes through the opening 154 of the lock assembly. (*Id.* at 10:17-19.) "As the discharge tube 32 passes through the opening 154, [the] tapered surface 188 of [the] flange 186 abuts the complementary beveled surface 155 around [the] opening 154. Further insertion of the discharge tube 32 thus serves to displace the tip lock 152 upwardly. Once [the] flange 186 passes beyond [the] tip lock 152,

[the] spring plate 160 forces the tip lock 152 to return to its initial position," thereby mechanically locking the tip assembly 30 to the handpiece 22. (*Id.* at 10:19-31.)

While only providing a single embodiment of the lock assembly, the specification makes clear that "there is no requirement that all versions of the invention employ the described tip lock. Other versions of the invention may employ other tip locks and even other tip assemblies." (*Id.* at 21:40-43.) Stryker argues that a person of ordinary skill in the art would understand "lock assembly" to mean "components that work together to secure or fasten the tip to the hand piece." The Court agrees, as this definition is consistent with not only the claim itself, but also the preferred embodiment in the specification, which teaches a design that uses several components to secure the tip assembly 30 to the handpiece 22. Extrinsic dictionary evidence provide further confirmation of the Court's construction, as "lock" is defined as "a device used to provide restraint," and "assembly" is defined as "the putting together of manufactured parts to make a completed product." AMERICAN HERITAGE ILLUSTRATED ENCYCLOPEDIC DICTIONARY 991 (1987).

Accordingly, the Court construes "lock assembly" to mean "components that work together to secure or fasten the tip to the hand piece."

*Appendix F*

5. *'383 Patent, Claim 1: "motor operable at variable speeds"*

The parties propose the following constructions for "motor operable at variable speeds" in claim 1 of the '383 patent:

| Claim Term | Stryker's Proposed Claim Construction | Zimmer's Proposed Claim Construction |
|---|---|---|
| '383, cl.1, col.21, l.58- 61: a single electric motor disposed in said housing and connected to said pump for actuating said pump, said motor operable at variable speeds to control the pumping rate of said pump; | A motor that can operate at more than one speed (Jt. State., docket # 61.) | Motor with continuously varying speed (Jt. State., docket # 61.) |

The parties disagree on the meaning of the phrase "operable at variable speeds." Stryker argues that "motor operable at variable speeds" includes any motor that can operate "at more than one speed." (Jt. State., docket # 61.) In contrast, Zimmer submits that the claim term is limited to only those motors that can run at "continuously varying speed[s]." (*Id.*)

*Appendix F*

The Court adopts Stryker's proposed construction because it is consistent with the intrinsic evidence of record, and Zimmer's is not. Claim 1 of the '383 patent provides for "a single electric motor," with the "motor operable at variable speeds to control the pumping rate of said pump." (docket # 77-3, at 21:58-61.) A person of ordinary skill in the art would understand the use of the term "variable" that modifies "speed" to mean a motor operating at more than one speed. However, there is nothing in the plain language of claim 1 that inherently requires a continuous spectrum of speed. In fact, Zimmer's proposed construction tacitly recognizes this by using the core claim language in its proposed construction and simply adding the modifier "continously" to it. The claim language, in contrast, does not include the limiting modifier, or anything like it.

The specification of the '383 patent reinforces the point. It describes the preferred embodiment of the medical irrigator. The specification describes a motor 36 that a user can turn on using a trigger lever 242 that is made of bendable, resilient plastic. (*Id.* at 14:54-64.) The rest position of the trigger lever 242 allows the motor 36 to remain in the "off" position. (*Id.*) When a user exerts a "light pull on the trigger lever 242," the motor 36 turns on, and "electric current is fed to the motor 36 only from half the battery collection," causing the motor 36 to run "at only a preselected fraction of its full speed and the pump unit 100 outputs irrigation liquid pulses at a desired frequency and amplitude, which are less than the maximum available" ("lower power pulsing"). (*Id.* at 14:64-15:10.) "Further pulling in of the trigger lever 242

by the user . . . establishes electrical contact . . . [that] appl[ies] the full series of voltage . . . to the motor 36 to operate the latter at its full speed and thereby drive the pump unit 100 at its full output" ("high power pulsing"). (*Id.* at 15:11-15:25.) In sum, the preferred embodiment teaches a motor with three discrete predetermined speed settings: "off," lower power pulsing (which engages half of the battery pack power source), and high power pulsing (which engages all of the battery pack power source). (*Id.* at 21:1-2.) It does not include a continuous spectrum of varying speeds.

The problem with Zimmer's proposed construction is that it unduly limits the claim term to "continuously variable speed" motors, excluding the preferred embodiment just discussed. Zimmer's construction would require the irrigator to operate on a continuous speed spectrum, excluding motors that only operate at predetermined, discrete speed settings. The Federal Circuit has repeatedly held, "[a] claim construction that excludes the preferred embodiment is rarely, if ever, correct." *Adams Respiratory Therapeutics, Inc. v. Perrigo Co.*, 616 F.3d 1283, 1290 (Fed. Cir. 2010). Zimmer's proposed construction runs afoul of this fundamental principle, as it would exclude the preferred embodiment disclosed in the specification, and nothing in the intrinsic or extrinsic evidence supports that.

At oral argument, Zimmer relied almost exclusively on the prosecution history to support its narrower definition of the term, but the reliance is misplaced. The record before the Court provides no reason to infer

that Stryker's amendment during prosecution—which cancelled virtually all of its original claims and substituted new ones—was intended to narrow the type of motor the allowed claims cover. "Unless altering claim language to escape examiner rejection, a patent applicant only limits claims during prosecution by clearly disavowing claim coverage." *See IMS Tech., Inc. v. Haas Automation, Inc.*, 206 F.3d 1422, 1439 (Fed. Cir. 2000). The record does not provide any evidence that indicates Stryker amended its claims to disavow any portion of the claim language's plain meaning.[3] Consequently, the Court declines to narrow its construction on this basis, instead adopting Stryker's construction of "motor operable at variable speeds" to mean "a motor that can operate at more than one speed."

*6-7. '383 Patent, Claim 10, 38: "variable speed electric motor"*
*'383 Patent, Claim 20: "motor operating at variable speeds"*

The parties also disagree as to the construction of "variable speed electric motor" in claims 10 and 38 of the '383 patent, and "motor operating at variable speeds" in claim 20, as illustrated below:

---

3. Stryker's claim amendment replaced all mention of "plural speed motors" with "variable speed motors" without any discussion as to the difference between the two, and narrowing the claim term based on this modification is not warranted.

*Appendix F*

| Claim Term | Stryker's Proposed Claim Construction | Zimmer's Proposed Claim Construction |
|---|---|---|
| '383, cl. 10, col.22, l.53- 55: a single, variable speed electric motor in said housing that is connected to said pump that actuates said pump so as to regulate the pumping rate of said pump;<br>'383, cl. 38, col.26, l.5-7: a single, variable speed electric motor disposed in said housing connected to said pump for actuating said pump at variable rates;<br>'383, col.23, l.56-59: a single electric motor disposed in said housing and connected to said pump to actuate said pump, said motor operating at variable speeds to regulate the pumping rate of said pump; | An electric motor that can operate at more than one speed (Jt. State., docket # 61.)<br>A motor that can operate at more than one speed (Jt. State., docket # 61.) | Electric motor with continuously variable speed (Jt. State., docket # 61.)<br>Motor with continuously varying speeds (Jt. State., docket # 61.) |

With respect to these claim terms, each party simply proposes the same construction as in claim 1, with the only exception that both parties' construction of "variable speed electric motor" in claims 10 and 38 provides the additional limitation that the motor must be electric. Because the constructions proposed for claims 1, 10, 20, and 38 all replicate each other, the Court will apply the same analysis to all of these claims and adopt Stryker's construction of the terms. *See Frank's Casing Crew & Rental Tools, Inc. v. Weatherford Int'l, Inc.*, 389 F.3d 1370, 1377 (Fed Cir. 2004.)

Accordingly, the Court construes "variable speed electric motor" as "an electric motor that can operate at more than one speed," and construes "motor operating at variable speeds" as "a motor that can operate at more than one speed."

*Appendix F*

*8. '383 Patent, Claims 1, 20, and 38: "control assembly"*

| Claim Term | Stryker's Proposed Claim Construction | Zimmer's Proposed Claim Construction |
|---|---|---|
| '383, cl.1, col.21, l.62- 63: a control assembly disposed in said housing to regulate the speed of said motor;<br>'383, cl. 20, col.23, l.66- col.24, ln.4: a control assembly integral with said housing, said control assembly having a switch member moveably mounted to said housing and said control assembly being configured to apply a variable energization signal from said battery pack to said motor so as to control the speed of said motor and regulate the pumping rate of said pump. | Components that work together to energize the motor (Jt. State., docket # 61.) | Subject to 35 U.S.C. § 112 ¶ 6.<br>Function:<br>- Claim 1: regulate the speed of said motor<br>- Claim 20: control the speed of said motor and regulate the pumping rate of said pump<br>- Claim 38: supplying a variable potential energization signal to said motor |

*Appendix F*

| | | |
|---|---|---|
| '383, cl. 38, col.26, l.15-24: a control assembly attached to said housing and connected between said at least one conductor of said motor for supplying a variable potential energization signal to said motor, said control assembly having a single switch member that is moveably attached to said housing that selectively makes/breaks a connection between said at least one conductor and said motor and that establishes the potential of the energization signal supplied to said motor. | | Structure: an L-shaped trigger member with an elongate trigger lever, a single switch contact support arm, a single conductive contact blade, two posts integral with the housing that are configured for electrical contacts to be mounted on them, two electrically-conductive, spring-like metal contacts mounted to said posts, and two electrically conductive contacts protruding rearwardly from the motor, one being a springy rectangular piece that is bent intermediate its ends in a dogleg fashion.<br><br>(Jt. State., docket # 61.) |

Similar to the issue between the parties regarding the "lock assembly" claim construction, the parties disagree as to whether "control assembly" requires the Court to engage in a means-plus-function analysis under 35 U.S.C. § 112 ¶ 6. Zimmer argues that the term "does not convey sufficiently definite structure to one of ordinary skill in the art," and the claim term must therefore be limited to the structures disclosed in the '383 patent specification. (docket # 76, at 25.) Stryker disagrees, arguing that "[i]n the context of the '383 patent, a person of ordinary skill would understand the term 'control assembly' to mean 'components that work together to energize the motor.'" (docket # 66, at 22.) Zimmer bears the burden of proving section 112 ¶ 6 applies. *Thyssenkrupp*, 649 F.3d at 1356. The Court concludes that Zimmer has not carried its burden.

Claims 1 and 38 of the '383 patent both provide for a control assembly in the housing of the handheld irrigator "to regulate the speed of [the] motor" by "apply[ing] a variable energization signal" to the motor from the irrigator's battery pack "to control the speed of said motor" and to "regulate the pumping rate of [the] pump." (docket # 77-3, at 23:66-24:4; 26:15-24.) As discussed above, the term "assembly," though broad, would connote structure to a person of ordinary skill in the art. *See Lighting World*, 382 F.3d at 1363; *Kegel*, 127 F.3d at 1427; *Alto-Shaam*, 2010 U.S. Dist. LEXIS 56857, 2010 WL 2382249 at *16-*18; *Fitness Quest*, 2007 U.S. Dist. LEXIS 60195, 2007 WL 2359821, at *8. Stryker did not utilize means-plus-function language within the claim, and the Court sees no reason to apply section 112 ¶ 6 in its

absence, given the structure the term "control assembly" connotes as used in the '383 patent.

Even though section 112 ¶ 6 does not apply, a construction is still necessary in light of the parties' disagreement as to the term's plain and ordinary meaning. Claims 20 and 38 state that the control assembly includes a "switch member," and that the assembly must be configured "to apply a variable energization signal" from the batteries in order to power and control the speed of the motor and regulate the irrigation pump rate. (*Id.* at 23:66-24:4; 26:15-24.) Against this backdrop, a person of ordinary skill in the art would construe the "control assembly" in the '383 patent as "components that work together to energize the motor," which is the construction Stryker proposes and the Court adopts as to this claim term. *See Lighting World, Inc.*, 382 F.3d at 1360 (holding that structural definitions may identify their function).

This construction is further confirmed when claims 20 and 38 are read in conjunction with dependent claims 22 and 40, which recite additional structural requirements of the control assembly. Claim 22 provides a claim requirement that further requires the control assembly to include two electrical conductors that are positioned so that "a switch member can be . . . positioned to: connect neither of said cable conductors to said motor; connect the first said cable conductor to said motor; or connect the second said cable conductor to said motor." (docket # 77-3, at 24:20-29.) Claim 42 requires a similar cable conductor configuration. (*Id.*) If the Court adopted Zimmer's narrow definition, the construction of the independent claims

would render the dependent claims superfluous—an outcome strongly disfavored when construing a claim term. *See, e.g., Phillips*, 415 F.3d at 1315; *Yoon Ja Kim v. ConAgra Foods, Inc.*, 465 F.3d 1312, 1319 (Fed. Cir. 2006); *Versa Corp. v. Ag-Bag Int'l Ltd.*, 392 F.3d 1325, 1330 (Fed. Cir. 2004).

The extrinsic evidence further confirms the Court's construction. Generally speaking, "control" is commonly used to describe "any set of instruments used to operate, regulate, or guide a machine." AMERICAN HERITAGE ILLUSTRATED ENCYCLOPEDIC DICTIONARY 381 (1987). And as previously noted, "assembly" is defined as "the putting together of manufactured parts to make a completed product." *Id.* at 42. Taken together, the Court is persuaded "control assembly" would be understood in common parlance to refer to a structure comprised of "parts that work together to operate, regulate, or guide a machine." Here, the "control assembly" in Claims 1 and 38 serve the express purpose of engergizing the motor of the irrigator. Accordingly, the Court construes "control assembly" as "components that work together to energize the motor."

*Appendix F*

*9. '383 Patent, Claim 10: "switch assembly"*

| Claim Term | Stryker's Proposed Claim Construction | Zimmer's Proposed Claim Construction |
|---|---|---|
| '383, col.22, l.63-col.23, 1.9: A switch assembly mounted to said housing for selectively establishing a connection between at least one of said conductors and said motor, said switch assembly having a switch element moveably attached to said handle, said switch assembly being configured so that:<br>when said switch element is in a first position, said switch assembly does not supply an energization signal to said motor;<br>when said switch element is in a second position, | Components that work together to make, break or change an electric circuit (Jt. State., docket # 61.) | Subject to 35 U.S.C. § 112 ¶ 6.<br>Function: selectively establishing a connection between at least one of said conductors and said motor<br>Structure: a single conductive contact blade, two posts integral with the housing that are configured for electrical contacts to be mounted on them, two electrically-conductive, spring-like metal contacts mounted to said posts, and two electrically conductive contacts protruding rearwardly from the motor, one being a springy rectangular |

| | | |
|---|---|---|
| said switch assembly supplies a first energization signal from said battery pack to said motor; and<br>when said switch element is in a third position, said switch assembly supplies a second energization signal from said battery pack to said motor. | | piece that is bent intermediate its ends in a dogleg fashion<br>(Jt. State., docket # 61.) |

With respect to the "switch assembly" in claim 10 of the '383 patent, the core issue is once again whether the term connotes sufficient structure for a person of ordinary skill in the art to understand its meaning. Zimmer submits that ""switch assembly" does not connote sufficiently definite structure to one of ordinary skill in the art and thus should be construed under section 112 ¶ 6, which would limit the "switch assembly" to embodiments disclosed in the specification. (docket # 76, at 27.) In contrast, Stryker argues "switch assembly" should not be limited to the embodiments in the specification under section 112 ¶ 6, but rather should be construed as "components that work together to make, break or change an electric circuit." (docket # 61.)

*Appendix F*

Claim 10 of the '383 patent provides for a "switch assembly mounted to said housing for selectively establishing a connection between at least one of" the conductors included in the irrigation handpiece to the motor. (docket # 77-3, at 22:63-67.) Claim 10 further provides that the switch assembly includes a "switch element moveably attached to [the] handle" and that the switch assembly must be configured so that it provides an "off," "first energization signal," and "second energization signal" from the device's battery pack to the motor. (*Id.* at 22:63-23:10.) Given that the hallmark means-plus-function language is absent from the '383 patent, Zimmer once again bears the burden to prove that section 112 ¶ 6 should apply.

Based on the claim language and other intrinsic evidence, however, the Court concludes a person of ordinary skill in the art would consider "switch assembly" to connote structure, and declines to apply section 112 ¶ 6. In addition to including the structural term "assembly" within the claim, the claim provides further limitations that confirm "switch assembly" is indeed structural. For example, the switch assembly includes a "switch member," which the parties do not dispute is a structural term, and is mounted on the housing of the irrigation handpiece. A person of ordinary skill would necessarily consider "switch assembly" as a structural term, given the structural definitions and positioning descriptions provided for in the claim language itself. Consequently, the Court holds that section 112 ¶ 6 does not apply.

The specification also supports this construction. As noted above, the "switch assembly" must be configured

"for selectively establishing a connection between at least one of said conductors and said motor." (*Id.* at 22:63-67.) A person of ordinary skill in the art would understand that a number of different switch assembly configurations could accomplish this functional requirement. The parties agree that the preferred embodiment discloses a structure consistent with Zimmer's proposed claim construction. Contrary to Zimmer's position, however, the Court concludes a person of ordinary skill in the art, who at a minimum possesses "a bachelor's degree in mechanical engineering and 2-3 years of industry experience relating to the design of medical devices," would not be limited to this disclosed configuration. (docket # 79, Milroy Decl. ¶ 18.) Rather, a person of ordinary skill in the art would define "switch assembly" as components that work together to make, break or change an electric current.

The extrinsic evidence confirms this construction. A "switch" is commonly defined as "a device for making, breaking, or changing an electric circuit." CHAMBER'S CONCISE DICTIONARY 1081 (1991). Taken together with the definition of "assembly" discussed above, a person of ordinary skill in the art would construe a "switch assembly" to mean "components that work together for making, breaking, or changing an electrical circuit." The Court concludes that this definition, although expansive, conveys sufficient structure to be understood by one of ordinary skill in the art, and would indeed be the definition a person of ordinary skill in the art would associate with "switch assembly."

Accordingly, the Court adopts Stryker's proposed definition of the claim term.

*Appendix F*

*10. '383 Patent, Claims 20 and 38: "switch member"*

| Claim Term | Stryker's Proposed Claim Construction | Zimmer's Proposed Claim Construction |
|---|---|---|
| '383, cl. 20, col.23, l.66- col.24, ln.4: a control assembly integral with said housing, said control assembly having a switch member moveably mounted to said housing and said control assembly being configured to apply a variable energization signal from said battery pack to said motor so as to control the speed of said motor and regulate the pumping rate of said pump.<br>'383, cl. 38, col.26, l.15- 24: a control assembly attached to said housing . . . said control assembly | A part for directing an electric current (Jt. State., docket # 61.) | Electrically conductive contact blade (Jt. State., docket # 61.) |

| | | |
|---|---|---|
| having a single switch member that is moveably attached to said housing that selectively makes/ breaks a connection between said at least one conductor and said motor and that establishes the potential of the energization signal supplied to said motor. | | |

The parties disagree as to the construction of "switch member" in claims 20 and 38 of the '383 patent. Stryker proposes a broad construction, arguing that the "switch member" should be construed to include any part that directs an electric current. (docket # 61.) Zimmer proposes a much more limited definition, essentially seeking to limit "switch member" to an electric conductive contact blade, such as the one disclosed in the preferred embodiment. (*Id.*) Neither party has proposed a convincing construction for the term.

Stryker's proposed definition is overly broad. While its construction would certainly encompass the contact blade disclosed in the '383 specification, it would also include conductors, motors, wires, and any other structure that is physically capable of "directing an electric current." A person would not have such a broad understanding of

"switch member," particularly as it is used in the '383 patent. Stryker's definition would improperly encompass various other claim limitations (the conductors and electric motor, for example), rendering claim terms superfluous and the claim itself nonsensical. In contrast, Zimmer's definition is unduly restrictive, seeking to limit the "switch member" to the type disclosed in the preferred embodiment—a conductive contact blade. A person of ordinary skill in the art would not adopt such a limited definition. The contact blade 253 simply serves to make, break, or otherwise change the electricity flow in the handpiece's electrical circuit, and a person of ordinary skill would construe the switch member as such.

Accordingly, the Court construes "switch member" as "a component for making, breaking, or changing an electric circuit." This construction is preferable, as it is consistent with the '383 patent as a whole. As discussed above, a person of ordinary skill in the art would understand "switch" to mean "a device for making, breaking, or changing an electric circuit." CHAMBER'S CONCISE DICTIONARY 1081 (1991). In construing "switch assembly," the Court adopted the fundamental definition of "switch," and sees no principled reason to depart from this definition here.

*Appendix F*

## CONCLUSION

This Claim Construction Memorandum addresses only the limited patent terms the parties selected for construction at this time, hoping this Court's construction would facilitate framing and resolution of the issues on dispositive motion practice or trial. The Court anticipates addressing any further claims construction issues in the context of dispositive motion practice, and preparation of the final pretrial order and jury instructions on any claims or defenses that go to trial.

**IT IS SO ORDERED.**

Dated: February 1, 2012

/s/ Robert J. Jonker
ROBERT J. JONKER
UNITED STATES DISTRICT JUDGE

No. 14-1520

# In the Supreme Court of the United States

STRYKER CORPORATION, ET AL., PETITIONERS

*v.*

ZIMMER, INC., ET AL.

*ON WRIT OF CERTIORARI*
*TO THE UNITED STATES COURT OF APPEALS*
*FOR THE FEDERAL CIRCUIT*

## SUPPLEMENTAL APPENDIX


JEFFREY B. WALL
SULLIVAN & CROMWELL LLP
1700 New York Ave., N.W.
Suite 700
Washington, D.C. 20006
wallj@sullcrom.com
(202) 956-7500

*Counsel of Record for Petitioners*

SETH WAXMAN
WILMER CUTLER PICKERING HALE AND DORR LLP
1875 Pennsylvania Ave., N.W.
Washington, D.C. 20006
seth.waxman@wilmerhale.com
(202) 663-6800

*Counsel of Record for Respondents*



PETITION FOR A WRIT OF CERTIORARI FILED: JUNE 22, 2015
CERTIORARI GRANTED: OCTOBER 19, 2015

## TABLE OF CONTENTS


Page

U.S. Patent No. 6,022,329 (excerpt) ..... 35
U.S. Patent No. 6,179,807 (excerpt) ..... 109
U.S. Patent No. 7,144,383 (excerpt) ..... 191
Stryker InterPulse brochure ..... 275
Stryker Surgilav Plus brochure ..... 278
PulsaJet business case (excerpt) ..... 298
H.M. Design meeting minutes (Jan. 25, 1999) (excerpt) ..... 347
Zimmer Pulsavac Plus wound debridement family brochure ..... 386
Zimmer's responses to Stryker's infringement contentions regarding the '807 patent (Docket entry No. 159, Attachment 5) (excerpt) ..... 400
Verdict form (Docket entry No. 381) (excerpt) ..... 470

# The United States of America

## The Commissioner of Patents and Trademarks

*Has received an application for a patent for a new and useful invention. The title and description of the invention are enclosed. The requirements of law have been complied with, and it has been determined that a patent on the invention shall be granted under the law.*

*Therefore, this*

## United States Patent

*Grants to the person(s) having title to this patent the right to exclude others from making, using, offering for sale, or selling the invention throughout the United States of America or importing the invention into the United States of America for the term set forth below, subject to the payment of maintenance fees as provided by law.*

*If this application was filed prior to June 8, 1995, the term of this patent is the longer of seventeen years from the date of grant of this patent or twenty years from the earliest effective U.S. filing date of the application, subject to any statutory extension.*

*If this application was filed on or after June 8, 1995, the term of this patent is twenty years from the U.S. filing date, subject to any statutory extension. If the application contains a specific reference to an earlier filed application or applications under 35 U.S.C. 120, 121 or 365(c), the term of the patent is twenty years from the date on which the earliest application was filed, subject to any statutory extension.*

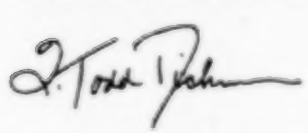

*Commissioner of Patents and Trademarks*

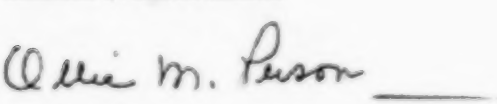

**NOTICE**

*If the application for this patent was filed on or after December 12, 1980, maintenance fees are due three years and six months, seven years and six months, and eleven years and six months after the date of this grant, or within a grace period of six months thereafter upon payment of a surcharge as provided by law. The amount, number and timing of the maintenance fees required may be changed by law or regulation. Unless payment of the applicable maintenance fee is received in the Patent and Trademark Office on or before the date the fee is due or within a grace period of six months thereafter, the patent will expire as of the end of such grace period.*

US006022329A

# United States Patent [19]

Arnett et al.

[11] Patent Number: 6,022,329

[45] Date of Patent: *Feb. 8, 2000

[54] **IRRIGATION HANDPIECE WITH BUILT IN PULSING PUMP**

[75] Inventors: **Jeffery D. Arnett**, Kalamazoo; **Nicholas V. Gately**, Portage; **David H. Grulke**, Battle Creek; **Ruth A. Hibben**, Saline; **James L. Sertic**, Kalamazoo, all of Mich.

[73] Assignee: **Stryker Corporation**, Kalamazoo, Mich.

[*] Notice: This patent is subject to a terminal disclaimer.

[21] Appl. No.: **09/009,657**

[22] Filed: **Jan. 20, 1998**

**Related U.S. Application Data**

[63] Continuation of application No. 08/559,133, Nov. 17, 1995, Pat. No. 5,718,668, which is a continuation of application No. 08/049,144, Apr. 19, 1993, Pat. No. 5,470,305.

[51] Int. Cl.[7] ..... **A61M 3/00**

[52] U.S. Cl. ..... **601/155**; 239/526; 239/373; 604/35; 604/153; 604/43; 601/161

[58] Field of Search ..... 601/154, 155, 601/160, 161, 162, 163, 165; 604/33, 35, 39, 43, 153; 128/DIG. 10, DIG. 12; 433/80; 74/523, 537, 538, 489; 200/522, 332.2, 293.1; 239/525, 526, 373; 222/333

[56] **References Cited**

U.S. PATENT DOCUMENTS

| | | |
|---|---|---|
| 509,220 | 11/1893 | Gustafson . |
| 602,666 | 4/1898 | Schroeder . |
| 738,503 | 9/1903 | Waters . |
| 790,353 | 5/1905 | Rathagan . |
| 1,317,851 | 10/1919 | Arnett . |
| 1,503,279 | 7/1924 | Nixon . |
| 1,538,007 | 5/1925 | Schallis . |
| 1,846,596 | 2/1932 | Hartzberg . |
| 2,012,886 | 8/1935 | Lowry . |
| 2,112,629 | 3/1938 | Lloyd . |
| 2,139,653 | 12/1938 | Bellinger . |

(List continued on next page.)

FOREIGN PATENT DOCUMENTS

| | | |
|---|---|---|
| 0 258 901 | 3/1988 | European Pat. Off. |
| 1 325 670 | 3/1963 | France |
| 24 16 099 | 4/1975 | Germany |
| WO94/19030 | 9/1994 | Japan |
| 1 264 138 | 2/1972 | United Kingdom . |
| 2 063 674A | 6/1981 | United Kingdom |
| WO81/01794 | 7/1981 | WIPO . |
| WO81/02335 | 8/1981 | WIPO . |
| WO83/03982 | 9/1983 | WIPO . |
| WO86/04247 | 8/1986 | WIPO |
| WO91/12830 | 9/1991 | WIPO |
| WO92/21388 | 12/1992 | WIPO . |
| WO93/17733 | 9/1993 | WIPO . |
| WO94/13335 | 6/1994 | WIPO . |
| WO94/23773 | 10/1994 | WIPO . |

OTHER PUBLICATIONS

Pulsavac, Operations Manual Pulsatile Lavage Debridement System (15 sheets) Jun. 1983 Snyder Laboratories, Inc. Dover, Ohio 44622.

(List continued on next page.)

*Primary Examiner*—Danton D. DeMille

*Attorney, Agent, or Firm*—Flynn, Thiel, Boutell & Tanis, P.C.

[57] **ABSTRACT**

A pulsed irrigation handpiece comprises a pulsed irrigation liquid outlet for applying liquid pulses to a surgical site, a pump unit reciprocatingly driveable for pumping pulses of irrigation liquid through the outlet, an electric powered drive unit for reciprocatingly driving the pump unit, and a housing containing the pump and drive units. A irrigation inlet hose leads from the pump unit out of the handpiece housing and is connectable to a remote irrigation liquid source. An irrigation inlet hose adjacent the remote end thereof and electric conductors extending along the irrigation inlet hose transfer electric power from the supply unit to the drive unit in the handpiece. Removable tips are alternatively removably attachable to the irrigation liquid outlet adjacent the front end of the handpiece.

**10 Claims, 17 Drawing Sheets**

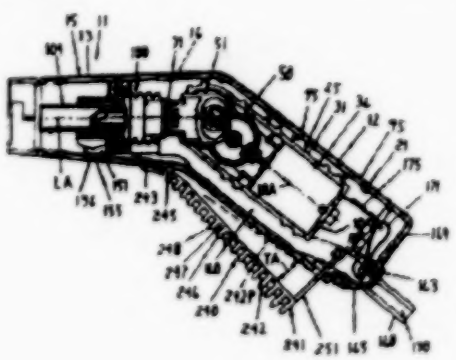

U.S. PATENT DOCUMENTS


| | | |
|---|---|---|
| 2,197,995 | 4/1940 | Crowley |
| 2,243,299 | 5/1941 | Travers . |
| 2,494,088 | 1/1950 | Daley |
| 2,531,793 | 11/1950 | Salek . |
| 2,595,491 | 5/1952 | Schweikert . |
| 2,634,885 | 4/1953 | North . |
| 2,662,485 | 12/1953 | Ilfrey |
| 2,684,049 | 7/1954 | Hollis . |
| 2,727,678 | 12/1955 | Henderson . |
| 2,733,713 | 2/1956 | Kalnick . |
| 2,781,154 | 2/1957 | Meredith . |
| 2,802,466 | 8/1957 | Thomas . |
| 2,847,007 | 8/1958 | Fox . |
| 2,874,696 | 2/1959 | Brad . |
| 2,908,273 | 10/1959 | Huston . |
| 2,993,654 | 7/1961 | Norton . |
| 3,001,288 | 9/1961 | Freedman . |
| 3,014,623 | 12/1961 | Horn et al. . |
| 3,039,272 | 6/1962 | Frick . |
| 3,044,465 | 7/1962 | Andersen et al. . |
| 3,048,121 | 8/1962 | Sheasley |
| 3,070,089 | 12/1962 | Dick . |
| 3,135,259 | 6/1964 | Evans . |
| 3,227,158 | 1/1966 | Mattingly |
| 3,237,306 | 3/1966 | Stumt . |
| 3,263,618 | 8/1966 | Carpenter |
| 3,295,371 | 1/1967 | Smith . |
| 3,316,845 | 5/1967 | Schumann . |
| 3,353,537 | 11/1967 | Knox et al. . |
| 3,359,909 | 12/1967 | Johnson et al. |
| 3,395,673 | 7/1968 | Mattingly |
| 3,416,567 | 12/1968 | VonDardel et al. . |
| 3,425,410 | 2/1969 | Cammack . |
| 3,426,743 | 2/1969 | Chenut et al. |
| 3,448,766 | 6/1969 | Schmide |
| 3,452,746 | 7/1969 | Shenhouse . |
| 3,484,121 | 12/1969 | Quinton . |
| 3,508,546 | 4/1970 | Rogers et al. . |
| 3,515,130 | 6/1970 | Trajino . |
| 3,561,433 | 2/1971 | Kovach . |
| 3,601,164 | 8/1971 | Bruce . |
| 3,605,556 | 9/1971 | Erdmann . |
| 3,635,607 | 1/1972 | Grise . |
| 3,653,377 | 4/1972 | Rebold . |
| 3,702,141 | 11/1972 | Wennborn . |
| 3,713,533 | 1/1973 | Reimels . |
| 3,731,411 | 5/1973 | Lloyd et al. |
| 3,731,676 | 5/1973 | Rebold . |
| 3,762,411 | 10/1973 | Lloyd et al. . |
| 3,765,802 | 10/1973 | Lestremau et al. . |
| 3,768,472 | 10/1973 | Hodosh et al. |
| 3,771,522 | 11/1973 | Wayslik et al. . |
| 3,784,235 | 1/1974 | Kessler et al. . |
| 3,794,031 | 2/1974 | Bloom . |
| 3,853,245 | 12/1974 | Branch . |
| 3,861,383 | 1/1975 | Kovach . |
| 3,883,074 | 5/1975 | Lambert . |
| 3,895,741 | 7/1975 | Nugent . |
| 3,949,753 | 4/1976 | Dockhorn . |
| 3,965,934 | 6/1976 | Rosenberg . |
| 3,982,540 | 9/1976 | Ross . |
| 3,986,266 | 10/1976 | Vellender |
| 3,993,054 | 11/1976 | Newman . |
| 4,037,739 | 2/1977 | Bren et al. |
| 4,030,495 | 6/1977 | Virag . |
| 4,030,498 | 6/1977 | Tompkins . |
| 4,061,142 | 12/1977 | Tuttle . |
| 4,111,391 | 9/1978 | Pilolla . |
| 4,123,091 | 10/1978 | Cassanino et al. |
| 4,205,676 | 6/1980 | Humphrey et al. |
| 4,215,476 | 8/1980 | Armstrong . |
| 4,248,589 | 2/1981 | Lewis . |
| 4,250,872 | 2/1981 | Tamari . |
| 4,257,416 | 3/1981 | Prager . |
| 4,267,947 | 5/1981 | Wasserstrom . |
| 4,275,726 | 6/1981 | Schoel . |
| 4,276,023 | 6/1981 | Phillips et al. |
| 4,278,078 | 7/1981 | Smith . |
| 4,282,867 | 8/1981 | Du Toit . |
| 4,290,454 | 9/1981 | Shetler . |
| 4,294,251 | 10/1981 | Greenwald et al. |
| 4,300,748 | 11/1981 | Keeley . |
| 4,313,699 | 2/1982 | Steele . |
| 4,314,560 | 2/1982 | Helfgott et al. . |
| 4,346,869 | 8/1982 | MacNeill . |
| 4,350,477 | 9/1982 | Mazal . |
| 4,395,205 | 7/1983 | McCullough . |
| 4,424,010 | 1/1984 | McCullough . |
| 4,424,055 | 1/1984 | Herman . |
| 4,428,345 | 1/1984 | Bertsch et al. |
| 4,428,748 | 1/1984 | Peyman et al. |
| 4,436,495 | 3/1984 | McCullough . |
| 4,445,819 | 5/1984 | Walling . |
| 4,449,827 | 5/1984 | Kuthiewicz . |
| 4,451,069 | 5/1984 | Malone . |
| 4,460,358 | 7/1984 | Somerville et al. |
| 4,468,221 | 8/1984 | Mayfield . |
| 4,472,120 | 9/1984 | McCullough . |
| 4,482,345 | 11/1984 | Chow et al. . |
| 4,484,769 | 11/1984 | Lacey |
| 4,489,750 | 12/1984 | Nehring . |
| 4,493,694 | 1/1985 | Wuchinich . |
| 4,502,502 | 3/1985 | Krug . |
| 4,508,532 | 4/1985 | Daws et al. . |
| 4,509,507 | 4/1985 | Yabe . |
| 4,512,066 | 4/1985 | McCullough . |
| 4,515,532 | 5/1985 | Walling . |
| 4,519,385 | 5/1985 | Atkinson et al. |
| 4,526,573 | 7/1985 | Lanier et al. . |
| 4,535,773 | 8/1985 | Yoon . |
| 4,537,182 | 8/1985 | Otani |
| 4,537,209 | 8/1985 | Sato . |
| 4,552,130 | 11/1985 | Kinoshita . |
| 4,553,957 | 11/1985 | Williams et al. . |
| 4,561,431 | 12/1985 | Atkinson . |
| 4,561,856 | 12/1985 | Cochran . |
| 4,580,816 | 4/1986 | Campbell et al. . |
| 4,583,531 | 4/1986 | Matichuk . |
| 4,592,749 | 6/1986 | Ebling et al. . |
| 4,596,558 | 6/1986 | Smith et al. |
| 4,601,710 | 7/1986 | Moll . |
| 4,604,089 | 8/1986 | Santangelo et al. . |
| 4,634,420 | 1/1987 | Spinosa et al. |
| 4,655,197 | 4/1987 | Atkinson . |
| 4,655,744 | 4/1987 | Thirtle et al. |
| 4,655,754 | 4/1987 | Richmond . |
| 4,655,765 | 4/1987 | Swift . |
| 4,662,829 | 5/1987 | Nehring . |
| 4,667,655 | 5/1987 | Ogin et al. . |
| 4,692,140 | 9/1987 | Olson . |
| 4,696,669 | 9/1987 | Membaum . |
| 4,705,500 | 11/1987 | Reimels et al. . |
| 4,741,678 | 5/1988 | Nehring . |
| 4,748,970 | 6/1988 | Nakajima . |
| 4,764,165 | 8/1988 | Reimels et al. . |
| 4,765,165 | 8/1988 | Reimels et al. . |
| 4,776,840 | 10/1988 | Preiss et al. . |
| 4,799,481 | 1/1989 | Transue, et al. |
| 4,817,599 | 4/1989 | Daws . |
| 4,872,837 | 10/1989 | Issalene et al. |
| 4,892,469 | 6/1990 | McCullough et al. . |
| 4,911,621 | 3/1990 | McCullough et al. . |

| | | |
|---|---|---|
| 4,925,450 | 5/1990 | Imonti et al. |
| 4,927,340 | 5/1990 | McCullough . |
| 4,935,005 | 6/1990 | Hasnes . |
| 4,941,872 | 7/1990 | Felix et al. |
| 4,957,483 | 9/1990 | Gessner et al. . |
| 4,978,282 | 12/1990 | Fu et al. . |
| 4,982,739 | 1/1991 | Hasnstreet et al. . |
| 5,019,038 | 5/1991 | Linden . |
| 5,046,486 | 9/1991 | Grulke et al. |
| 5,049,071 | 9/1991 | Davis et al. |
| 5,053,002 | 10/1991 | Barlow . |
| 5,098,387 | 3/1992 | West et al. . |
| 5,120,305 | 6/1992 | Bochringer et al. . |
| 5,142,723 | 9/1992 | Lustig . |
| 5,170,779 | 12/1992 | Ginsburg . |
| 5,176,629 | 1/1993 | Kullas et al. |
| 5,186,714 | 2/1993 | Boudreault et al. . |
| 5,188,591 | 2/1993 | Dorsey, III . |
| 5,195,959 | 3/1993 | Smith . |
| 5,197,460 | 3/1993 | Ito . |
| 5,203,769 | 4/1993 | Clement et al. |
| 5,224,929 | 7/1993 | Remiszewski |
| 5,261,905 | 11/1993 | Donesay, III |
| 5,269,750 | 12/1993 | Grulke et al. . |
| 5,295,956 | 3/1994 | Bales et al. . |
| 5,305,735 | 4/1994 | Welden . |
| 5,322,503 | 6/1994 | Desai . |
| 5,336,238 | 8/1994 | Holmes et al. . |
| 5,391,145 | 2/1995 | Dorsey . |
| 5,470,305 | 11/1995 | Arnett et al. . |
| 5,484,402 | 1/1996 | Saravia et al. |
| 5,514,089 | 5/1996 | Walbrink et al. . |
| 5,562,640 | 10/1996 | McCabe et al. . |
| 5,573,504 | 11/1996 | Dorsey, III . |
| 5,586,977 | 12/1996 | Dorsey, III . |
| 5,718,668 | 2/1998 | Arnett et al. . |

OTHER PUBLICATIONS

Davol Instructions for Use. Simpulse™ Suction/Irrigator (2 sheets) Davol. Inc. 100 Sockanossett Crossroad. Cranston. R102920 Jan. 1985.

Copy of photos of Ethicon. photos of Pfizer. Valley Lambs (10 photos) Jun. 25. 1993.

One–™ Minimal Access Surgery System. Introducing the VAC–™ Handcontrolled Suction Irrigation Instrument. ConMed Aspen Surgical Systems. Conmed Jul. 1992. 10M.

DAVOL—Endo–Flo™ Irrigator. Bard. Davol Inc.; instruction booklet #041002–0. 9011R. Nov. 1990.

Pulsatile Lavage Debridement System. brochure No. 82–010–5150–0146/2.5M CISS Zimmer Inc.. Snyder Labs Inc. 1982.

Suction/Irrigation Is No Longer An Issue. Hydro–Dissection System. 556529 PP ICM Jul. 1992. Karl Storz GmbH & Co. Tuttlengen West Germany.

A Fully Integrated Laparoscopic Irrigation and Instrumentation System. Cabot Medical. Langhorne. PA Apr. 1992. 10M L/T (4 sheets)

Advances In Pelviscopy. The Irrigation Pump System. Cabot Medical Langhorne. PA Apr. 1990 (3 sheets).

InteliIBT™. Fluid Management System User's Manual. Smith & Nephew Dyonics Inc., copyright 1992. PN1060170.

Davol Arthro–Flo®. Instructions For Use. 038657–0 901R. C.R. Bard. Inc. Cranston RI. Jan. 1990.

Davol. Arthro–Flo High–Flo Irrigator. Bard. OP–AF0015000 Aug. 1992 5M C.R. Bard Inc. Cranston. RI.

3M Fluid Control System. For Precise Control of all Arthroscopic Procedures. 70–2008–5458–9. 1992 3M.

Davol Simpulse–™ Suction/Irrigator. BARD. 034089–0 (2 sheets) Jan. 1985.

U.S. Patent Feb. 8, 2000 Sheet 1 of 17 6,022,329

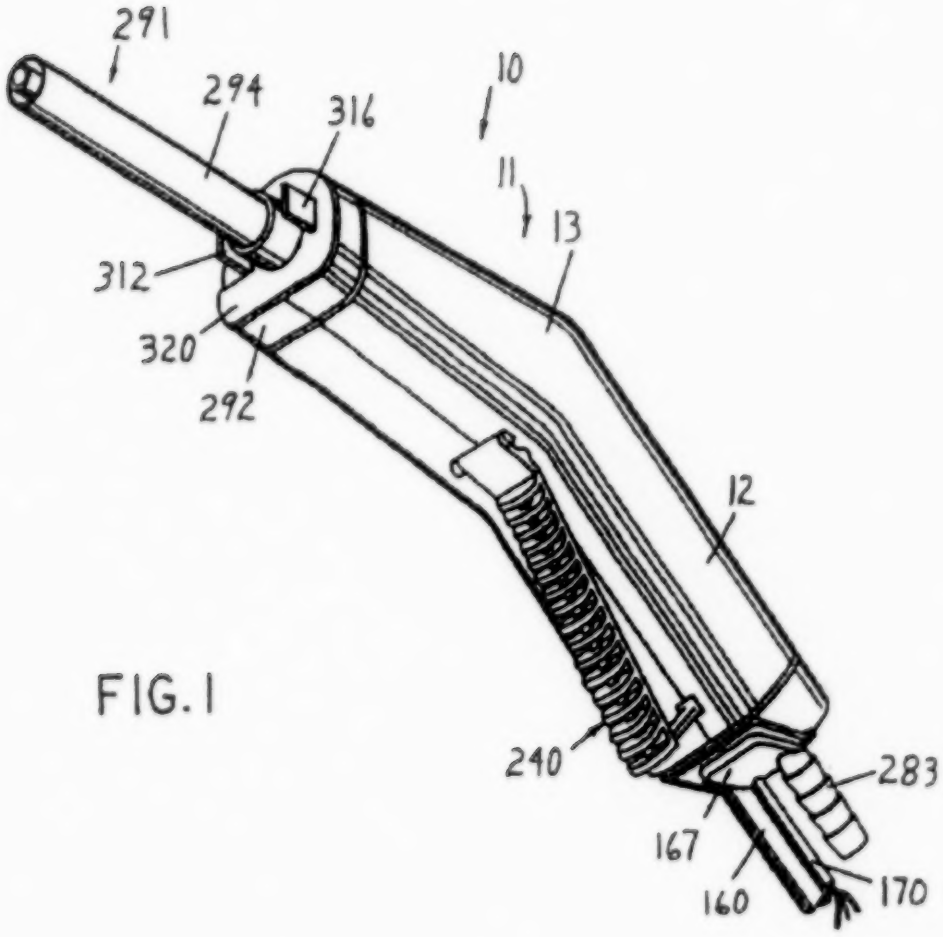


FIG. 1

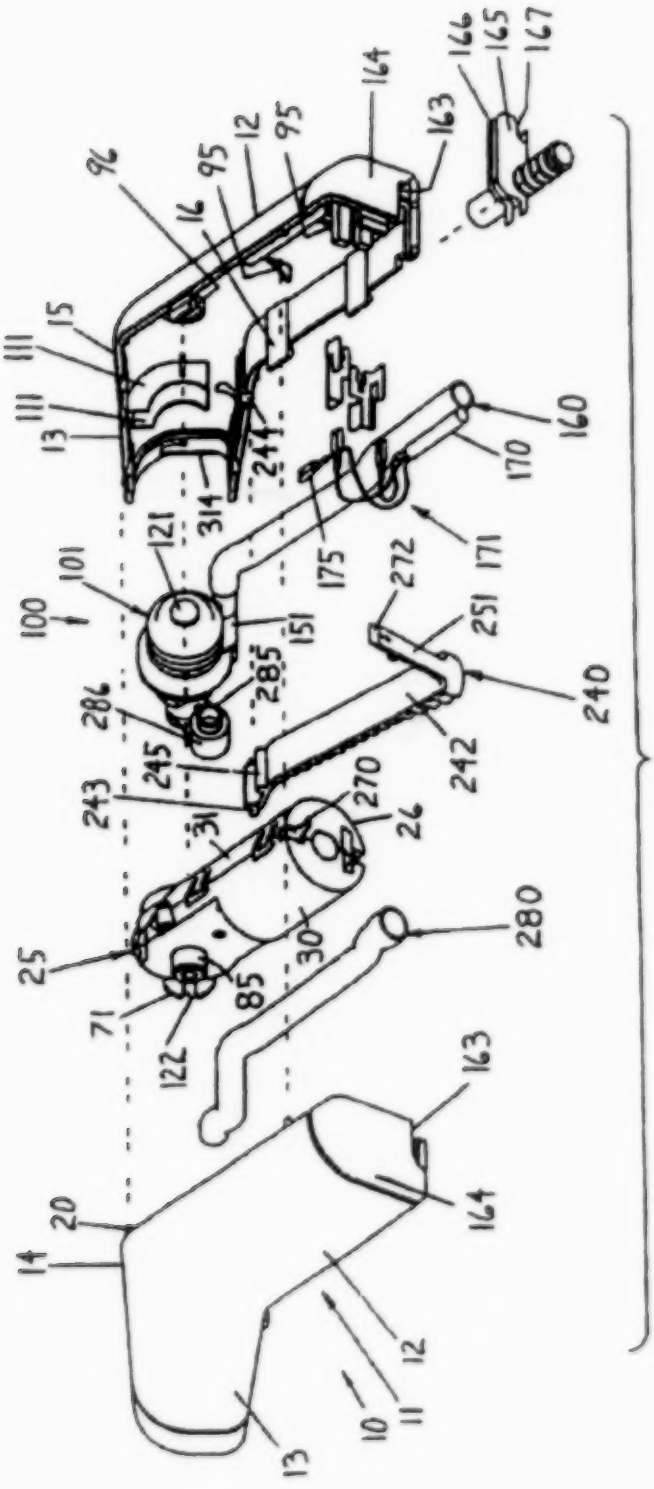

10
11
12
13
14
15
16
20
25
26
30
31
71
85
96
95
100
101
111
121
122
151
160
163
164
165
166
167
170
171
175
240
242
243
244
245
251
270
272
280
285
286
314


FIG. 2

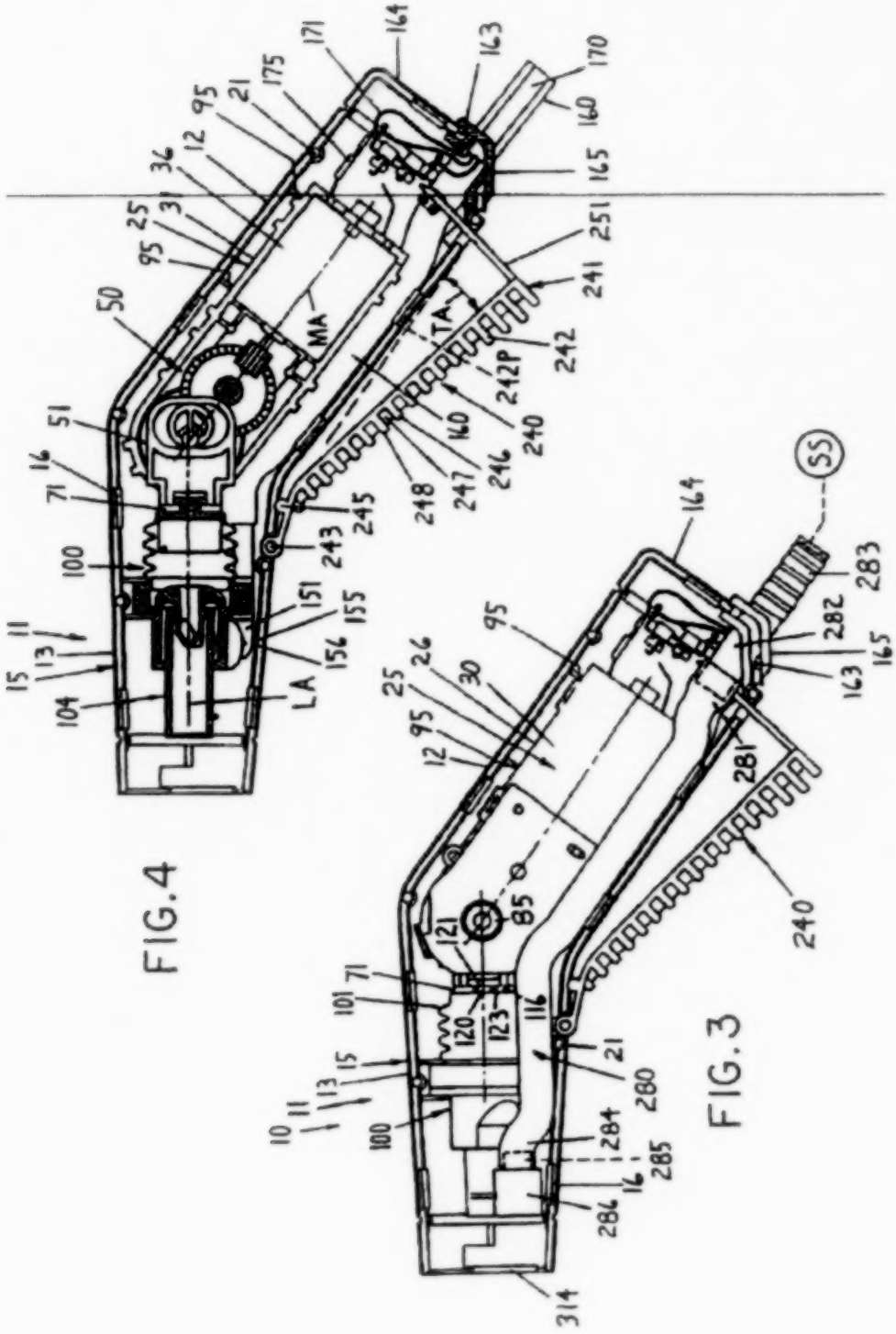

164
171
163
170
175
21
95
160
12
36
165
25
31
251
95
241
50
MA
TA
242
242P
51
160
240
16
246
71
247
248
245
100
243
151
155
11
13
156
15
104
LA
SS
164
283
95
282
26
165
25
30
163
95
12
281
85
240
121
71
101
116
120
123
21
15
280
13
11
10
100
284
285
16
286
314


FIG. 4

FIG. 3

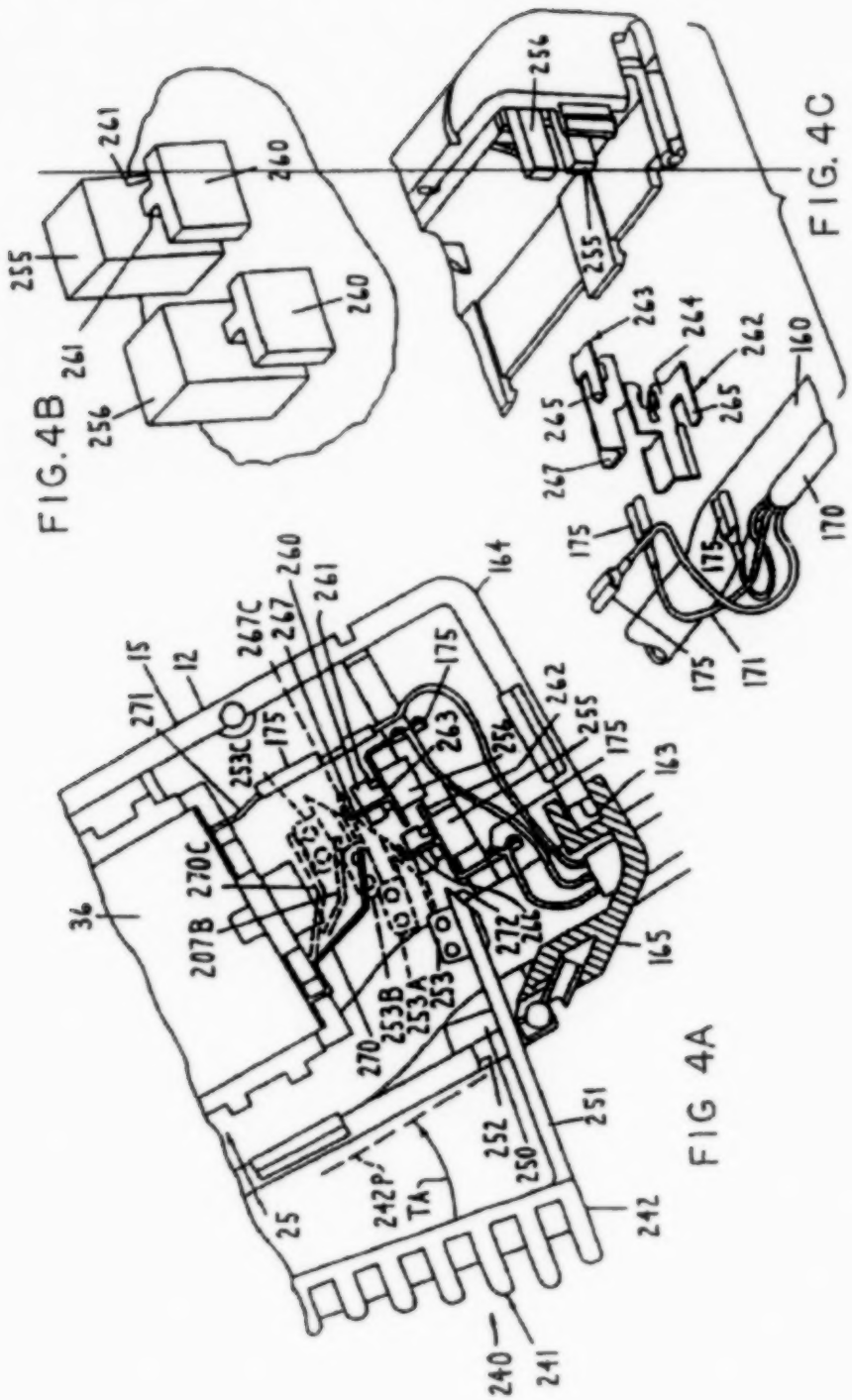
FIG. 4A
FIG. 4B
FIG. 4C

FIG. 5

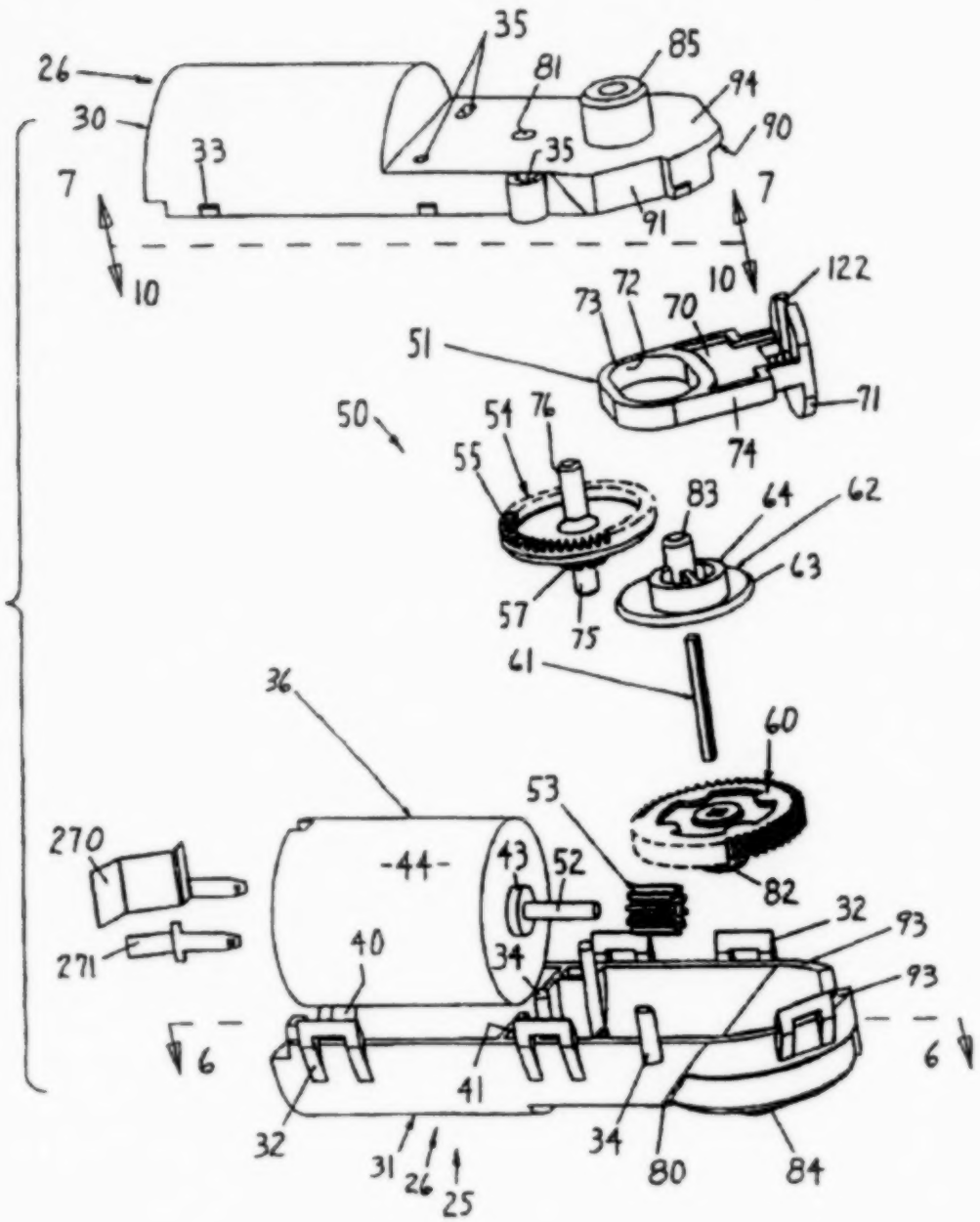
26
30
33
7
10
35
81
85
94
90
91
35
7
10
122
73
72
70
51
71
74
50
54
76
55
83
64
62
63
57
75
61
60
36
53
270
271
-44-
43
52
82
32
93
93
40
34
6
6
41
32
31
26
25
34
80
84

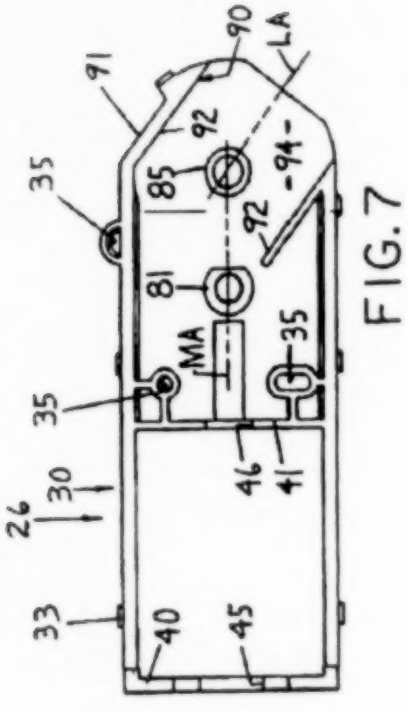


FIG. 7

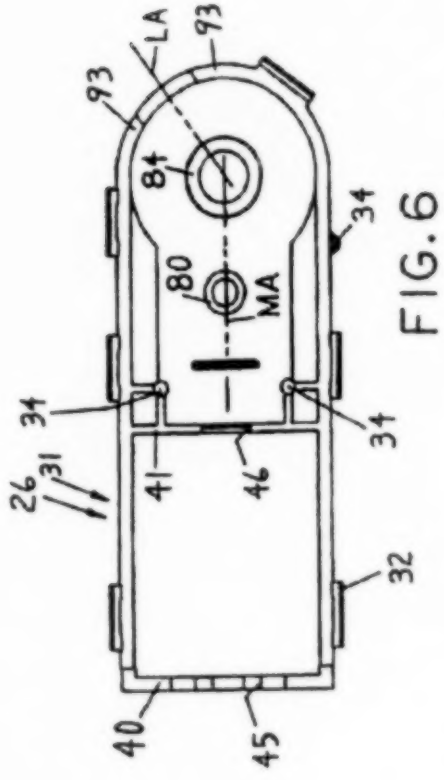


FIG. 6

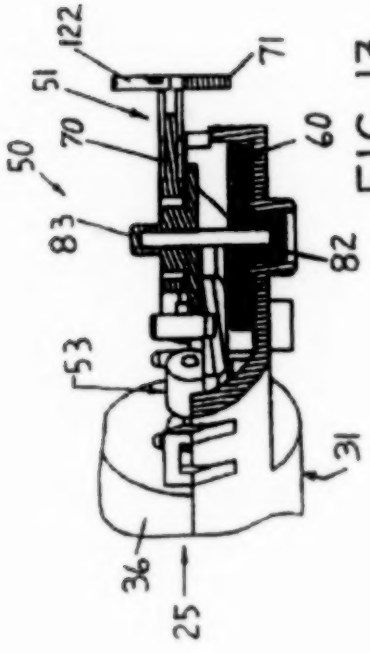


FIG. 13

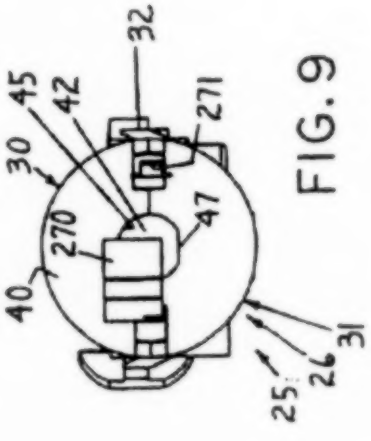


FIG. 9

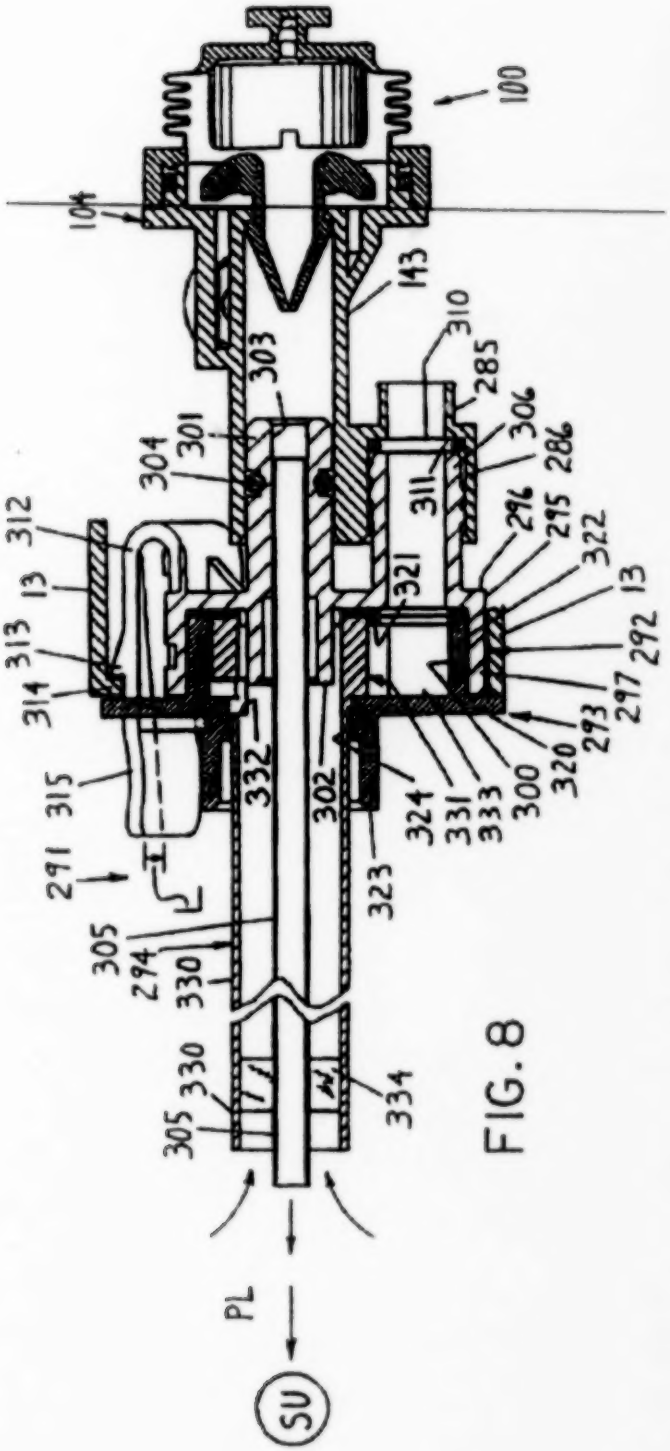
100
104
143
310
285
306
286
311
303
301
304
312
13
313
314
315
291
305
294
330
332
302
323
324
331
333
300
320
293
297
292
13
322
295
296
321
PL
SU

FIG. 8

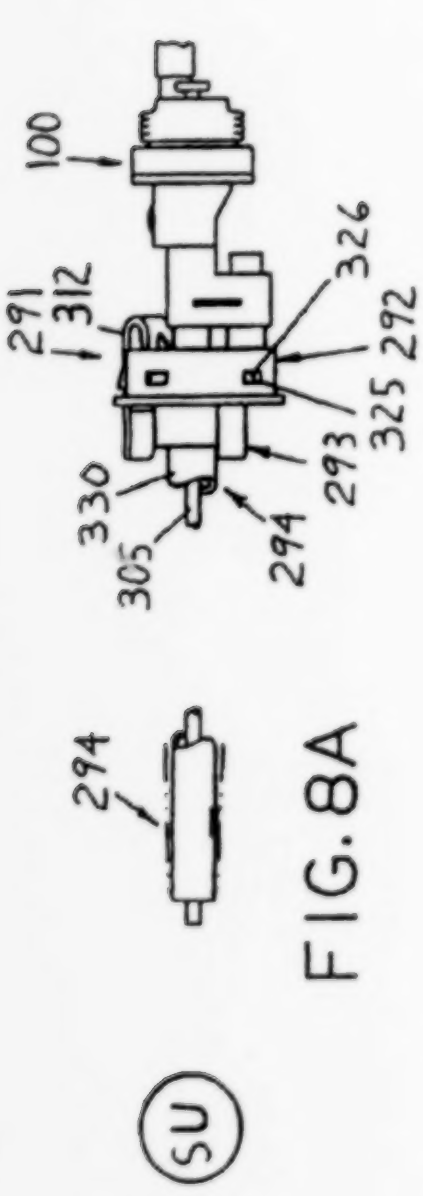
100
291
312
326
292
325
293
330
305
294
294
SU

FIG. 8A

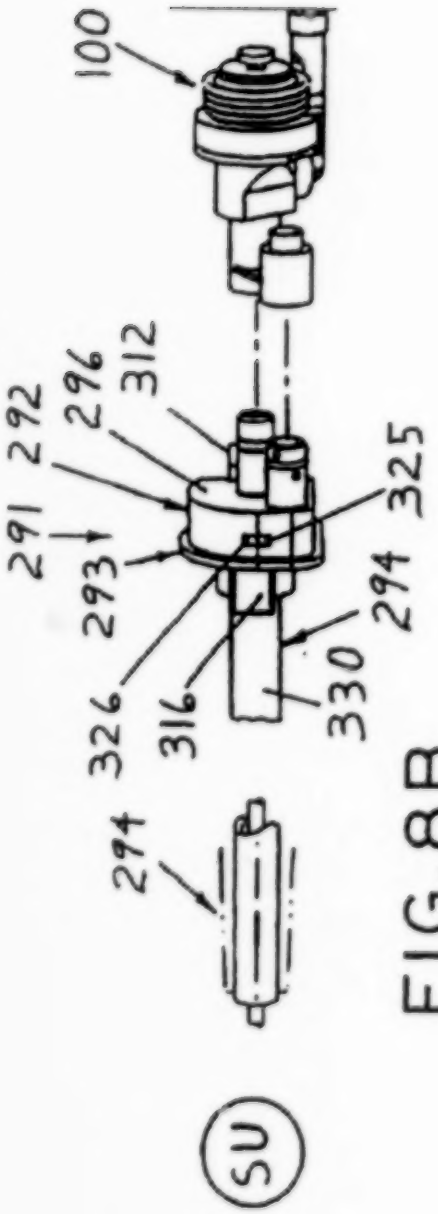
100
291
292
296
312
325
293
326
316
330
294
294
SU

FIG. 8B

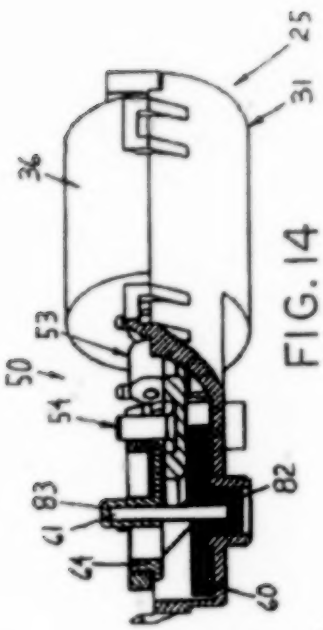

FIG. 14

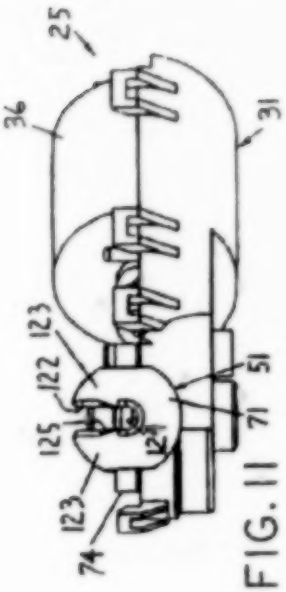

FIG. 11

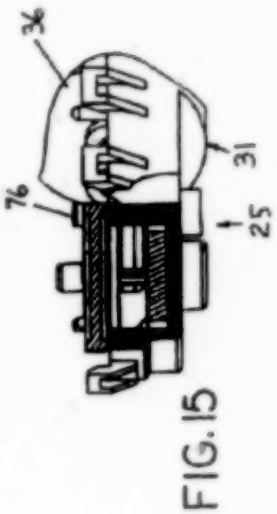

FIG. 15

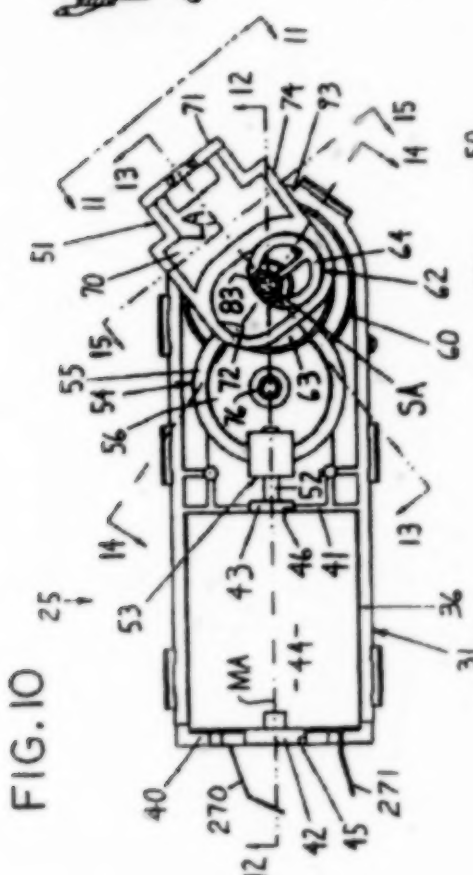

FIG. 10

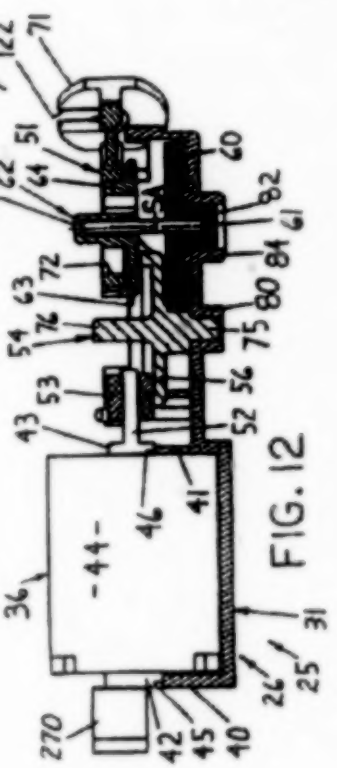

FIG. 12

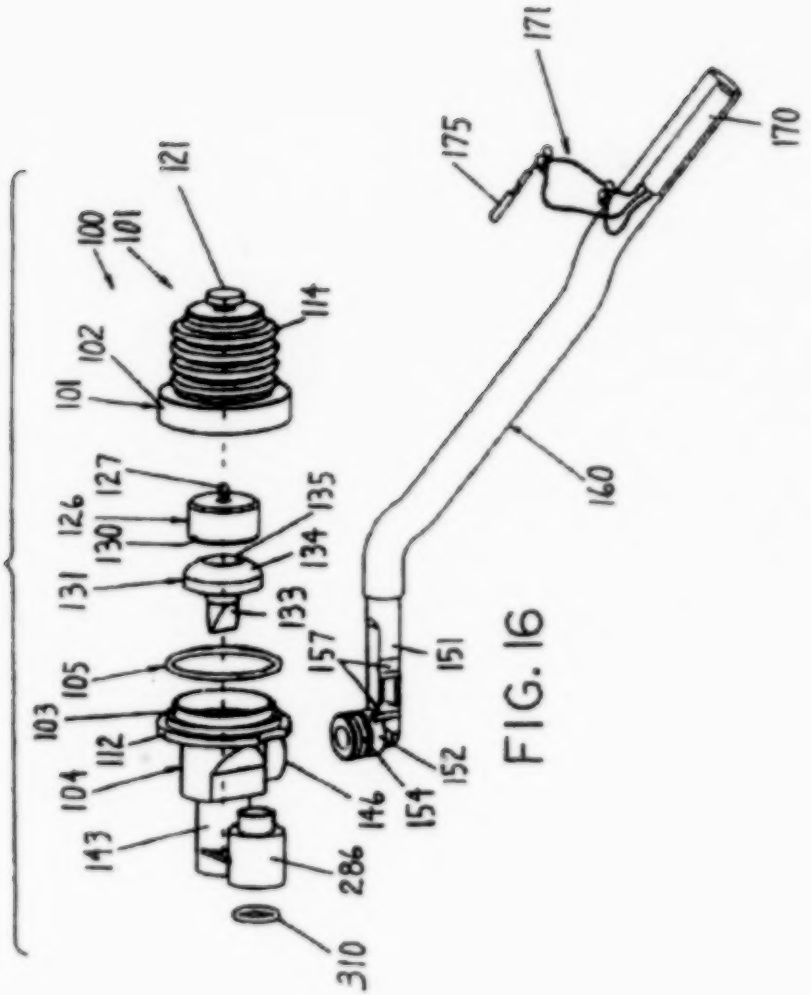
100
101
121
114
102
101
127
126
130
135
134
131
133
105
103
112
104
143
286
310
146
154
152
157
151
160
175
171
170

FIG. 16

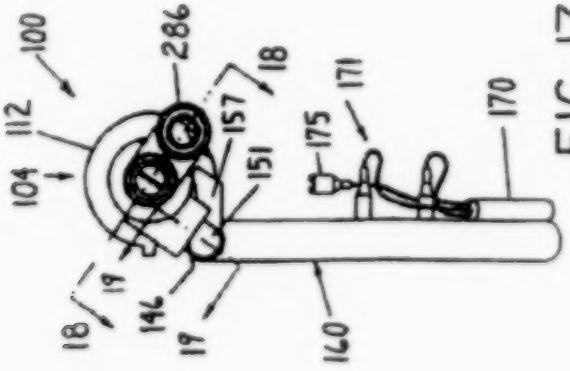
100
286
18
112
104
157
151
175
171
170
19
146
19
18
160

FIG. 17

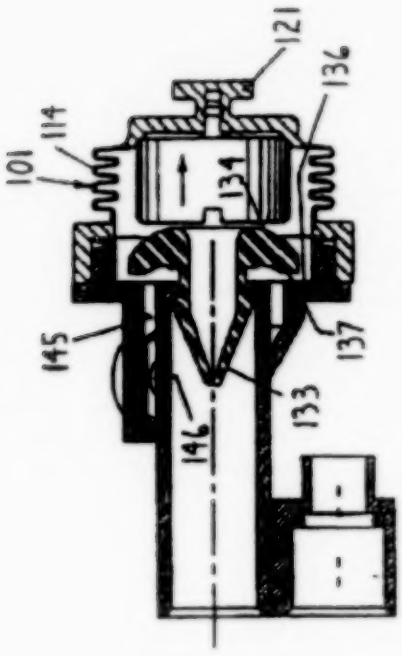


FIG. 18A

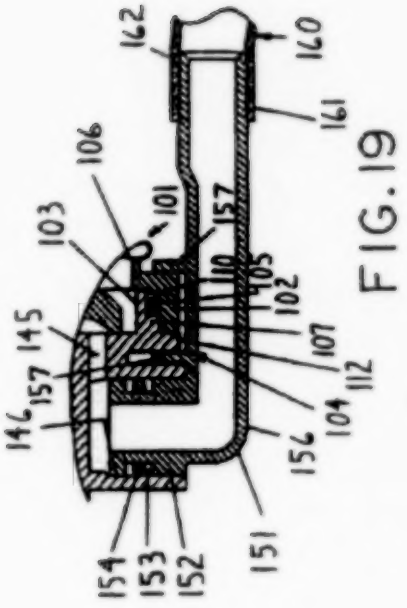


FIG. 19

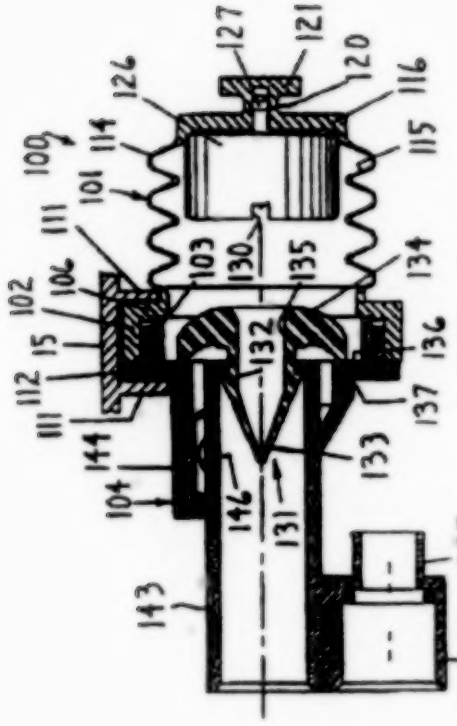


FIG. 18

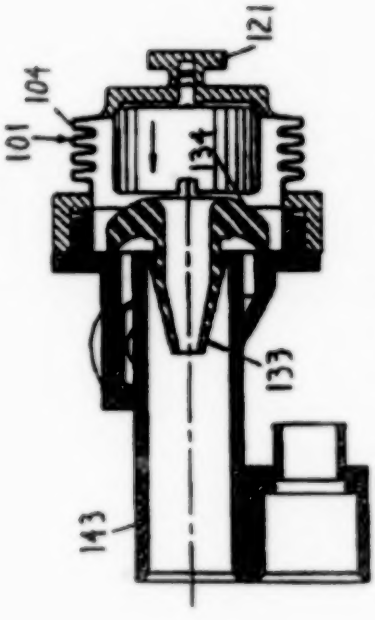


FIG. 18B

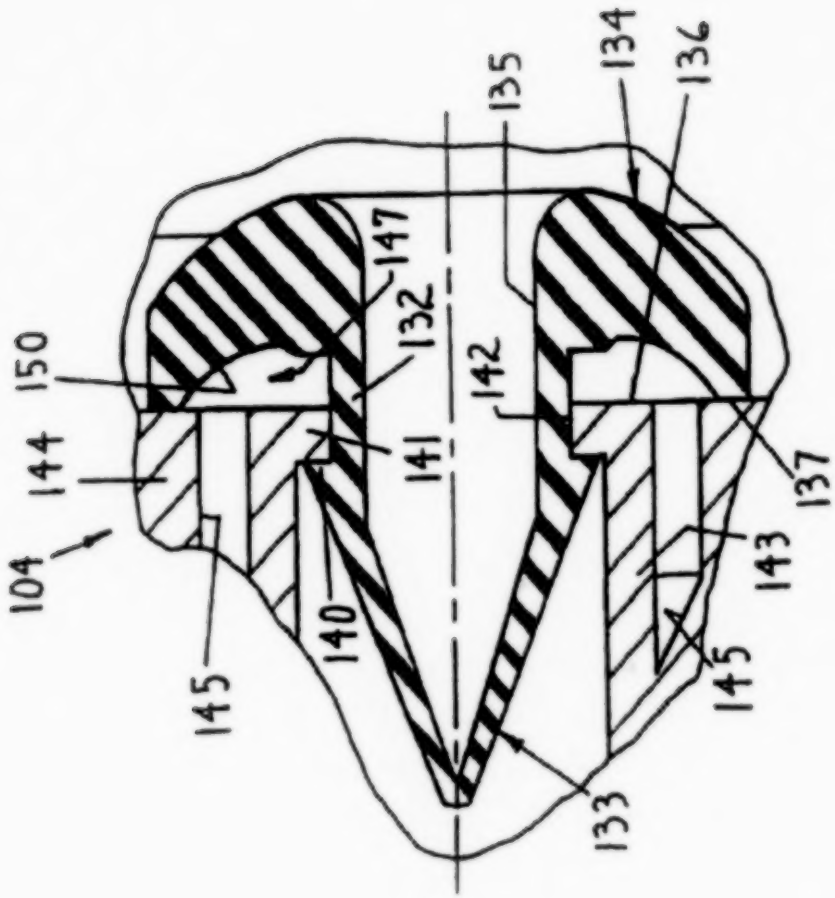


FIG. 18C

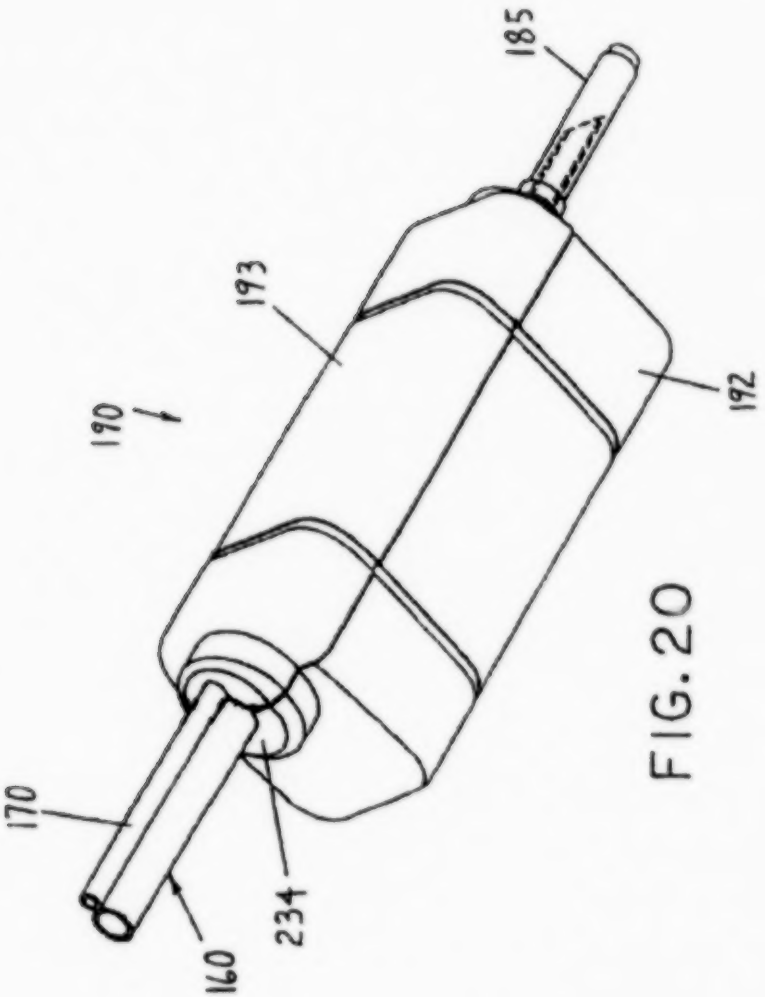


FIG. 20

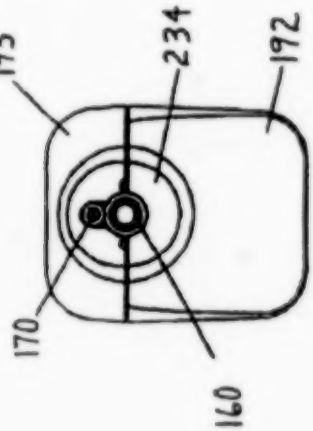


FIG. 21

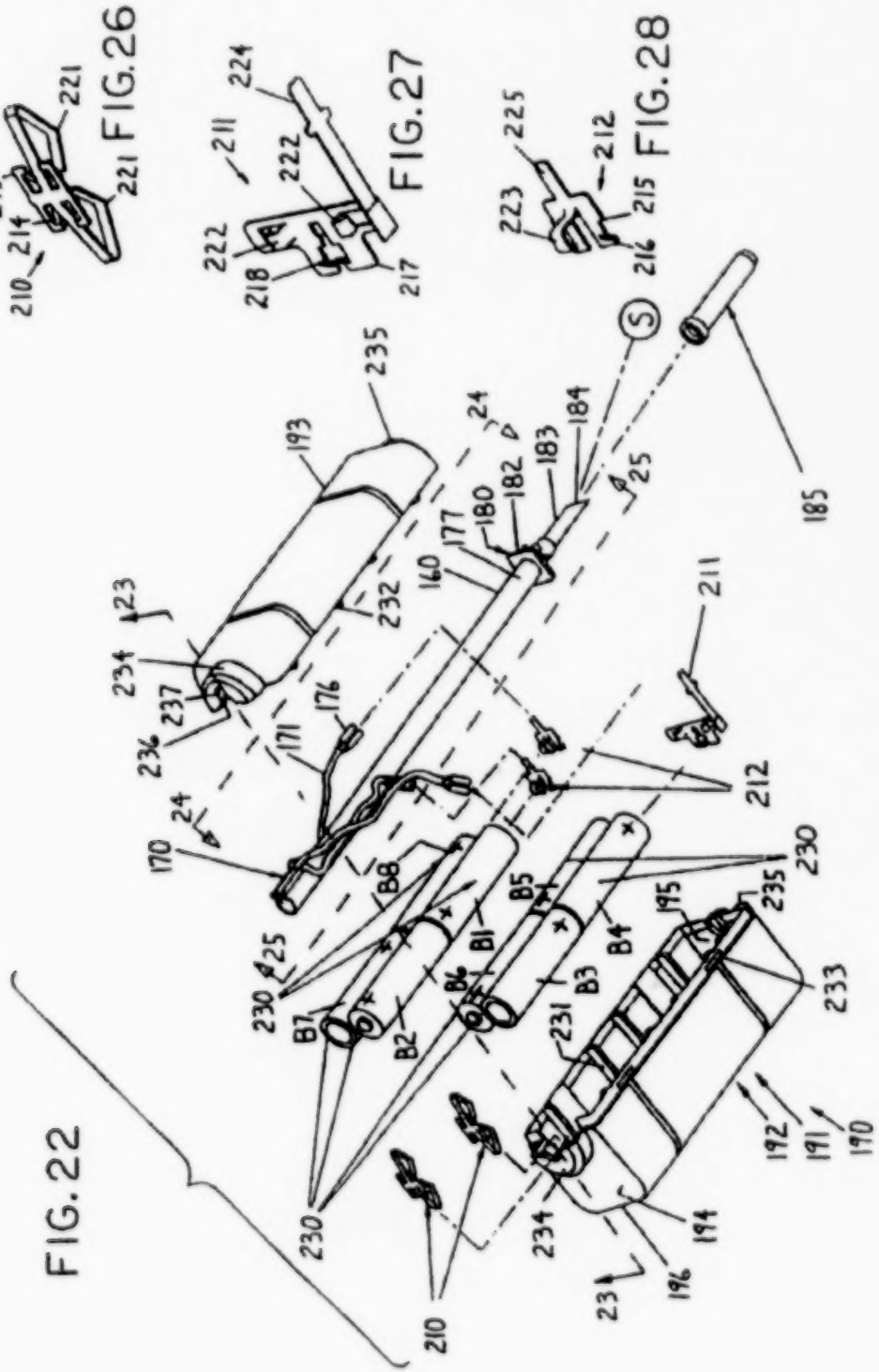


FIG. 26

FIG. 27

FIG. 28

FIG. 22

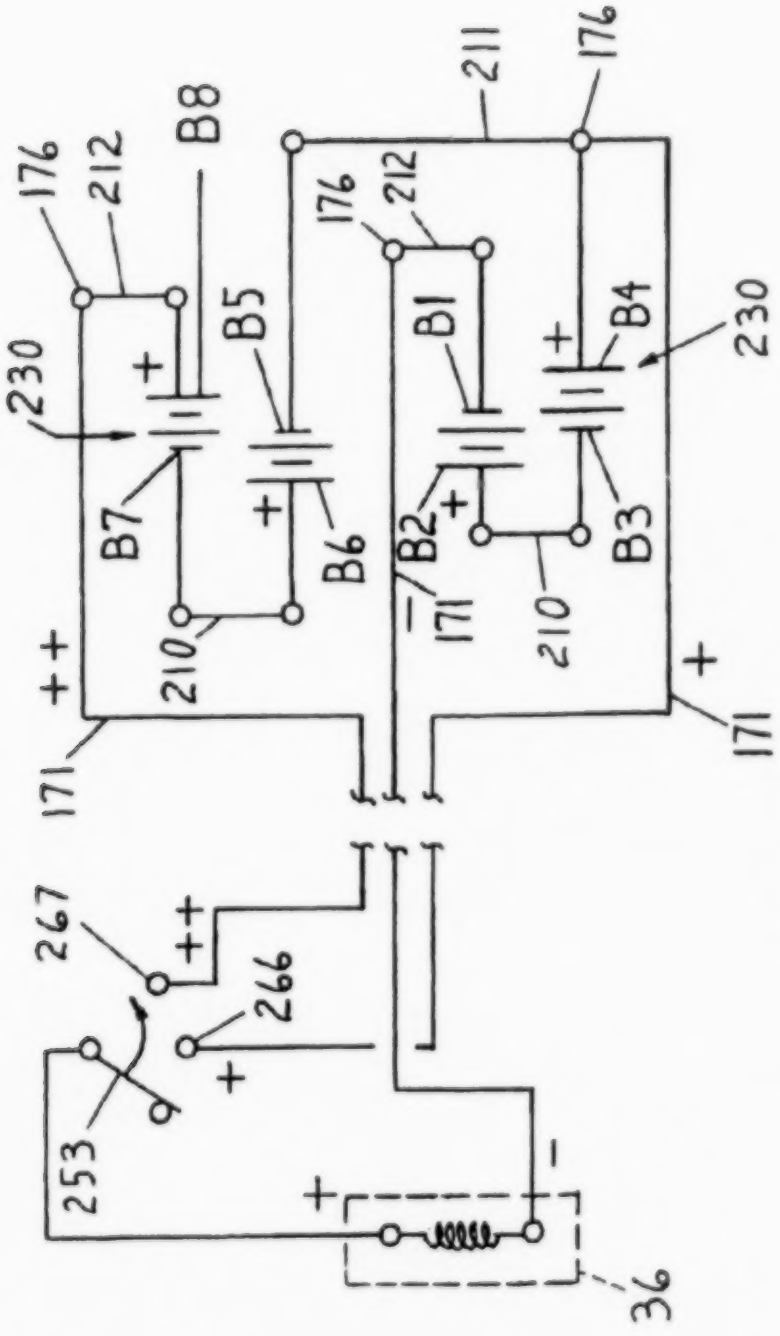
176
212
B8
230
B7
B5
B6
210
211
176
212
B1
B2
B3
B4
230
171
210
171
171
267
266
253
36

FIG. 22A

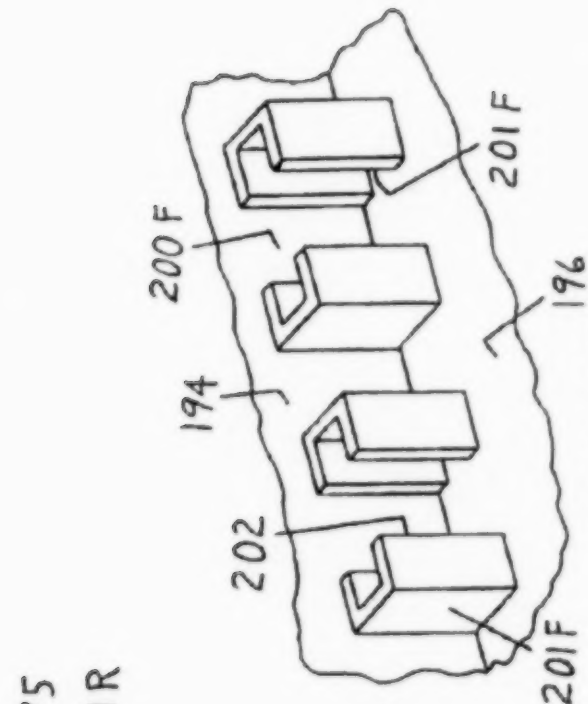


FIG. 23A

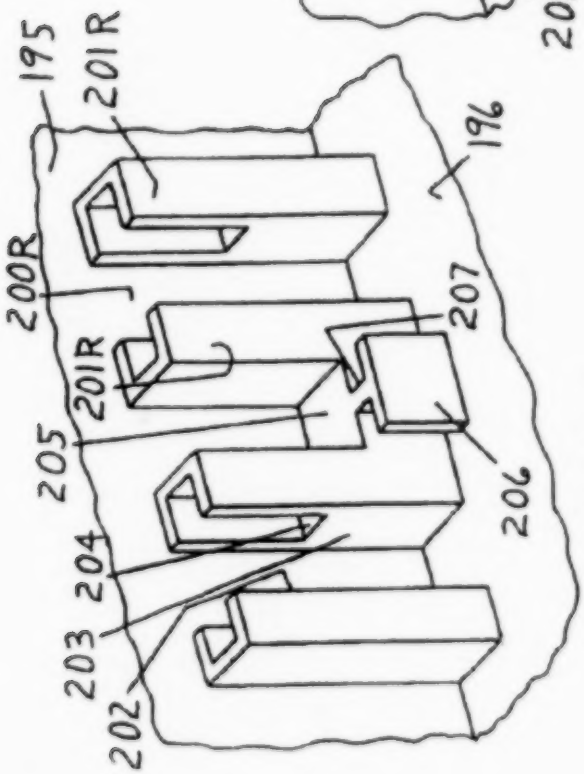


FIG. 23B

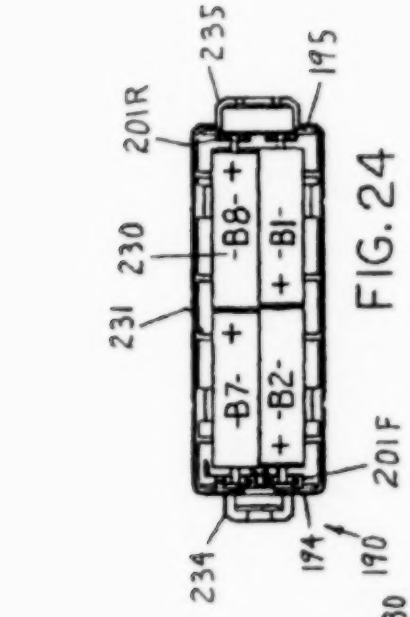


FIG. 24

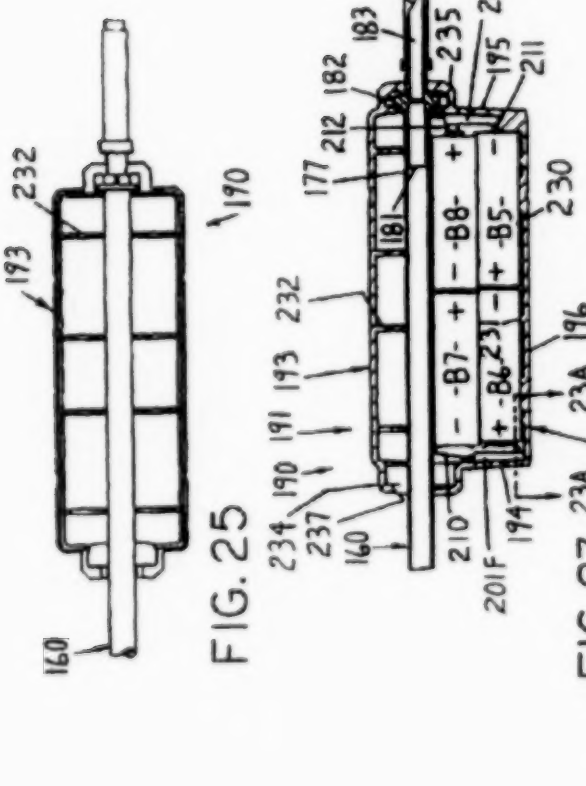


FIG. 23




FIG. 25

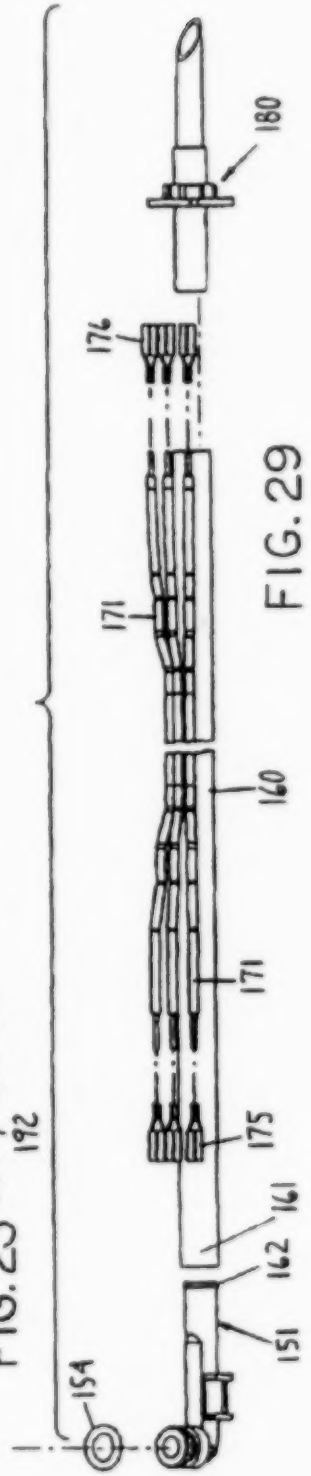


FIG. 29

# The United States of America

## The Director of the United States Patent and Trademark Office

*Has received an application for a patent for a new and useful invention. The title and description of the invention are enclosed. The requirements of law have been complied with, and it has been determined that a patent on the invention shall be granted under the law.*

*Therefore, this*

## United States Patent

*Grants to the person(s) having title to this patent the right to exclude others from making, using, offering for sale, or selling the invention throughout the United States of America or importing the invention into the United States of America for the term set forth below, subject to the payment of maintenance fees as provided by law.*

*If this application was filed prior to June 8, 1995, the term of this patent is the longer of seventeen years from the date of grant of this patent or twenty years from the earliest effective U.S. filing date of the application, subject to any statutory extension.*

*If this application was filed on or after June 8, 1995, the term of this patent is twenty years from the U.S. filing date, subject to any statutory extension. If the application contains a specific reference to an earlier filed application or applications under 35 U.S.C. 120, 121 or 365(c), the term of the patent is twenty years from the date on which the earliest application was filed, subject to any statutory extensions.*

Nicholas P. Godici

*Acting Director of the United States Patent and Trademark Office*

Attest: Brenda Moore

**NOTICE**

*If the application for this patent was filed on or after December 12, 1980, maintenance fees are due three years and six months, seven years and six months, and eleven years and six months after the date of this grant, or within a grace period of six months thereafter upon payment of a surcharge as provided by law. The amount, number of timing of the maintenance fees required may be changed by law or regulation. Unless payment of the applicable maintenance fee is received in the United States Patent and Trademark Office on or before the date the fee is due or within a grace period of six months thereafter, the patent will expire as of the end of such grace period.*

US006179807B1

(12) **United States Patent**
**Henniges et al.**

(10) **Patent No.: US 6,179,807 B1**
(45) **Date of Patent: Jan. 30, 2001**

(54) **SURGICAL/MEDICAL IRRIGATOR WITH REMOVABLE TIP AND INTEGRATED SUCTION CONDUIT**

(75) Inventors: **Bruce D. Henniges**, Kalamazoo; **Kris D. Eager**, Richland; **David A. Burke**, Portage; **Douglas L. Tyler, Sr.**, Paw Paw; **David H. Grulke**, Battle Creek, all of MI (US)

(73) Assignee: **Stryker Corporation**, Kalamazoo, MI (US)

( * ) Notice: Under 35 U.S.C. 154(b), the term of this patent shall be extended for 0 days.

(21) Appl. No.: **09/425,820**

(22) Filed: **Oct. 22, 1999**

**Related U.S. Application Data**

(62) Division of application No. 08/915,431, filed on Aug. 20, 1997.

(51) **Int. Cl.**[7] ..... **A61M 5/32**
(52) **U.S. Cl.** ..... **604/35**; 604/39
(58) **Field of Search** ..... 604/35, 39, 43, 604/21, 66, 67, 131, 902, 151

(56) **References Cited**

U.S. PATENT DOCUMENTS

| | | |
|---|---|---|
| D. 281,535 | 11/1985 | Atkinson et al. . |
| D. 356,146 | 3/1995 | Palmaymessa . |
| 4,489,750 | 12/1984 | Nehring . |
| 4,519,385 | 5/1985 | Atkinson et al. . |
| 4,555,645 | 11/1985 | Atkinson . |
| 4,561,431 | 12/1985 | Atkinson . |
| 4,583,531 | 4/1986 | Manchen . |
| 4,633,621 | 1/1987 | Atkinson . |
| 4,662,829 | 5/1987 | Nehring . |
| 4,692,140 | 9/1987 | Olson . |
| 4,741,678 | 5/1988 | Nehring . |
| 4,776,840 | 10/1988 | Preuss et al. . |
| 4,941,872 | 7/1990 | Felix et al. . |
| 4,957,483 | 9/1990 | Gonzer et al. |
| 5,046,486 | 9/1991 | Grulke et al. . |
| 5,269,750 | 12/1993 | Gulke et al. . |
| 5,470,305 | 11/1995 | Ames et al. . |
| 5,484,402 | 1/1996 | Saravia et al. . |

OTHER PUBLICATIONS

Zimmer, The Zimmer Var-A-Pulse Wound Debridement System, Dec., 1996, 2 pgs.
Zimmer, It's a Matter of Time The Pulsavac System, Dec., 1994, 6 pgs.
Zimmer, Pulsavac Wound Debridement System for Power and Control, Dec., 1996, 8 pgs.
Davol, *To Pulsed Lavage*, The Choice Is Remarkably Simple, Jan., 1995, 4 pgs.
Davol, *Performance Irrigation™ Systems*, Pulsed Lavage for Wound Management, Dec., 1995, 2 pgs.
Davol, *To Pulsed Lavage, The Choice Is Simple*, Sep., 1994, 3 pgs.

*Primary Examiner*—John D. Yasko
(74) *Attorney, Agent, or Firm*—Flynn, Thiel, Boutell & Tanis, P.C.

(57) **ABSTRACT**

An irrigator (20) useful for surgical and medical procedures. The irrigator includes a handpiece (22) to which a tip assembly (30) is attached. The handpiece (22) includes a drain tube (50) that extends through the body of the handpiece and outside of the handpiece to the complementary suction system. The tip assembly includes a discharge tube (32) that is snap secured into the front of the handpiece and a suction tube (48) that seats in the open front end of the drain tube. A removable splash shield (181) is attached to the front end of the tip assembly. A trigger (44) allows one-handed control of, the position of the handpiece, the on/off state of the irrigator and the rate at which fluid is discharged from the irrigator. A rechargeable power pack (222) can be used to supply the energization current needed to activate a number of different handpieces at different speeds.

**54 Claims, 15 Drawing Sheets**

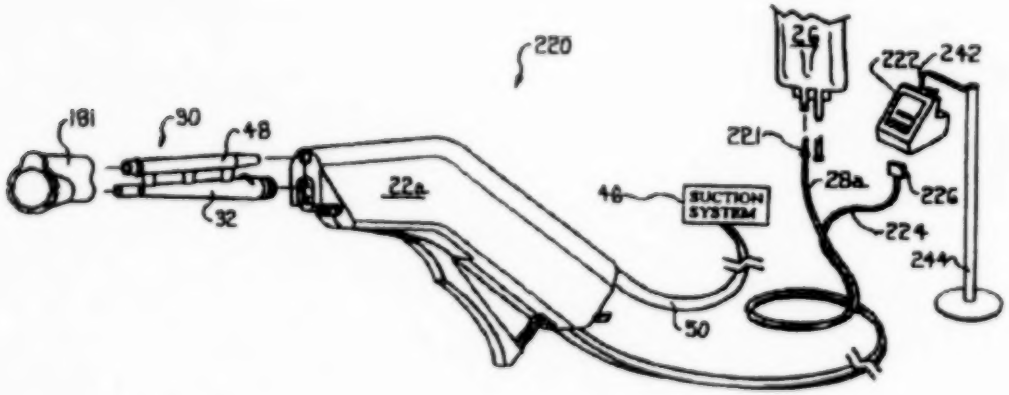

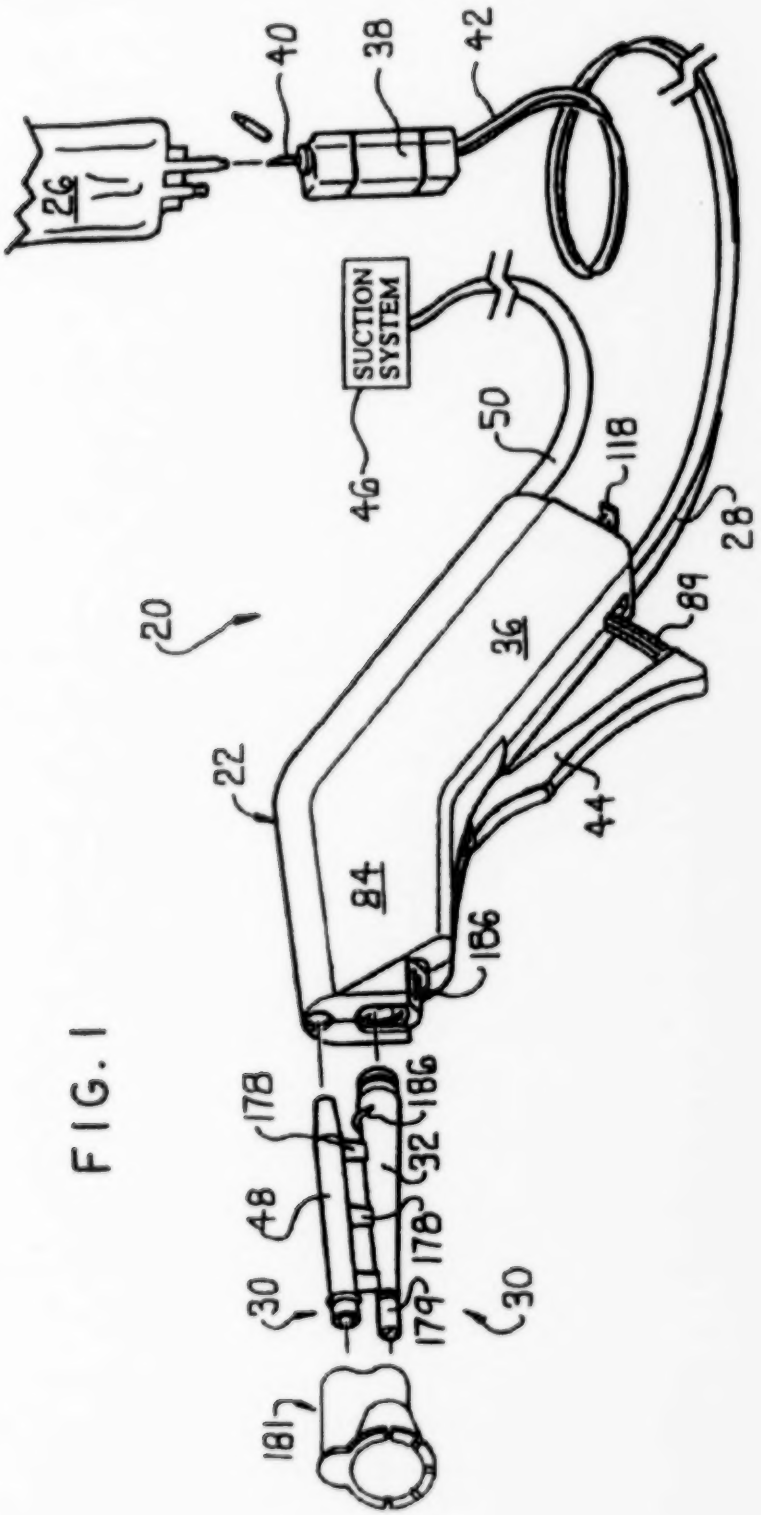
40
38
42
26
SUCTION SYSTEM
50
46
118
28
89
20
36
22
44
84
186
178
186
32
48
178
30
179
30
181

FIG. 1

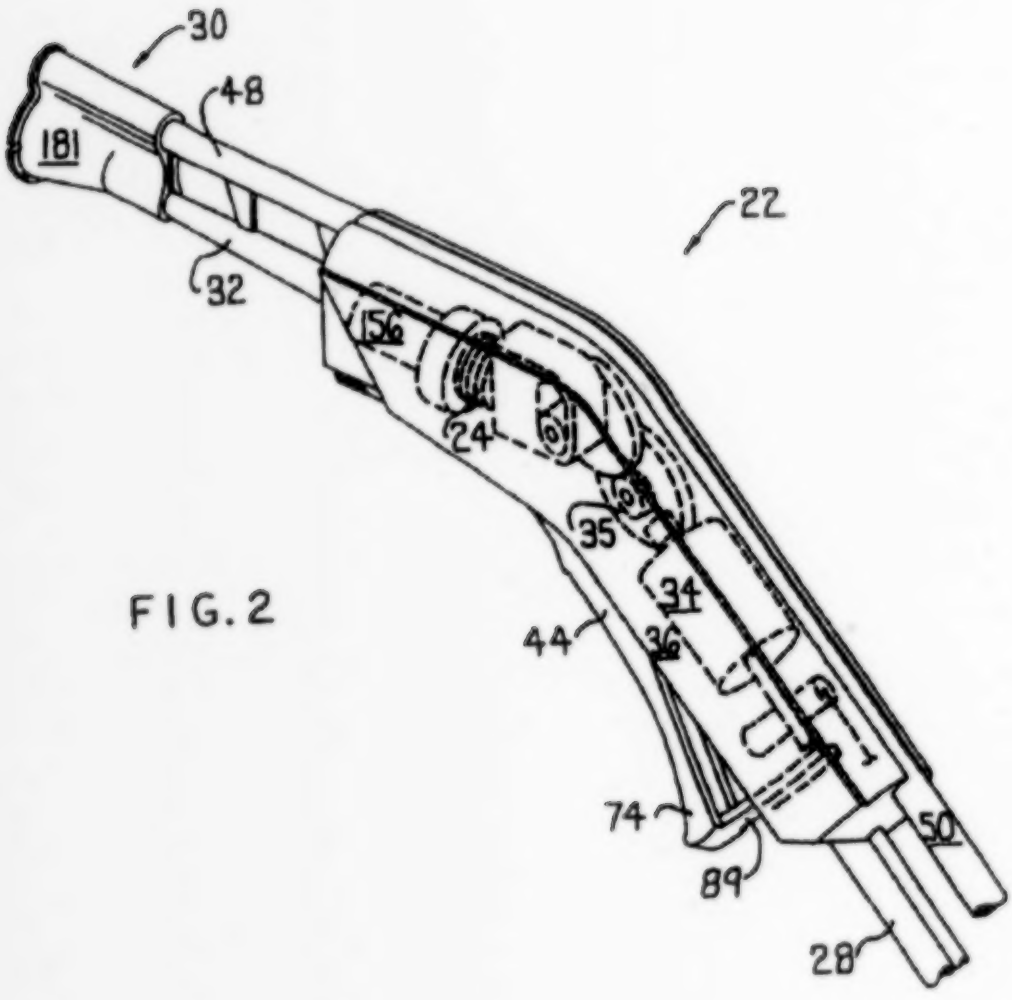


FIG. 2

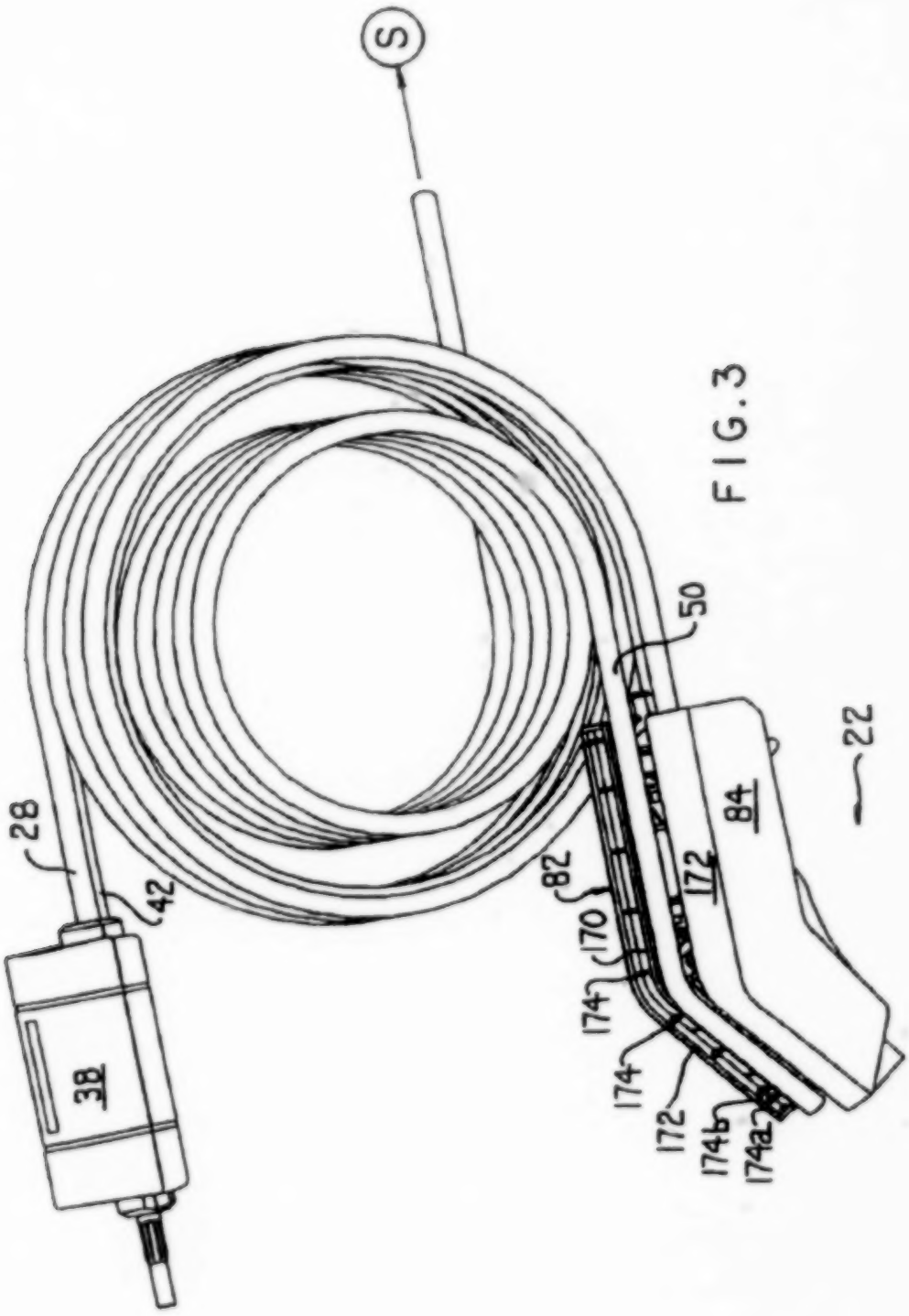


FIG. 3

FIG. 4

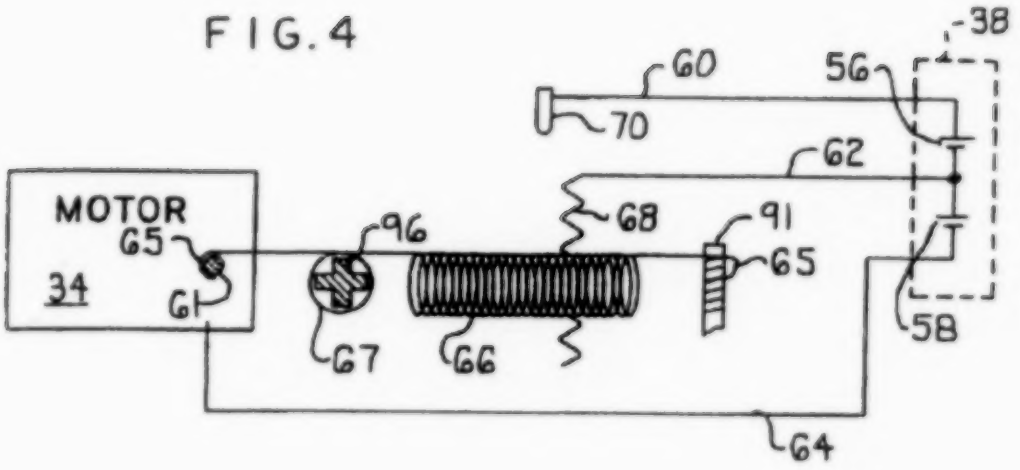
38
60
56
70
62
MOTOR
65
96
68
91
65
34
61
67
66
58
64

FIG. 14

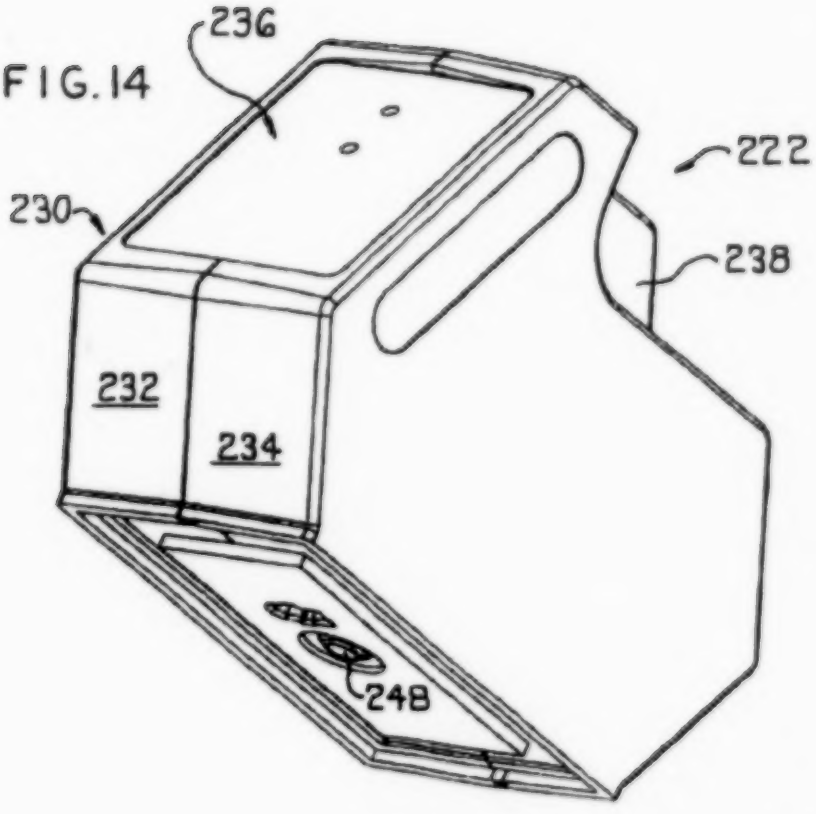
236
222
230
238
232
234
248

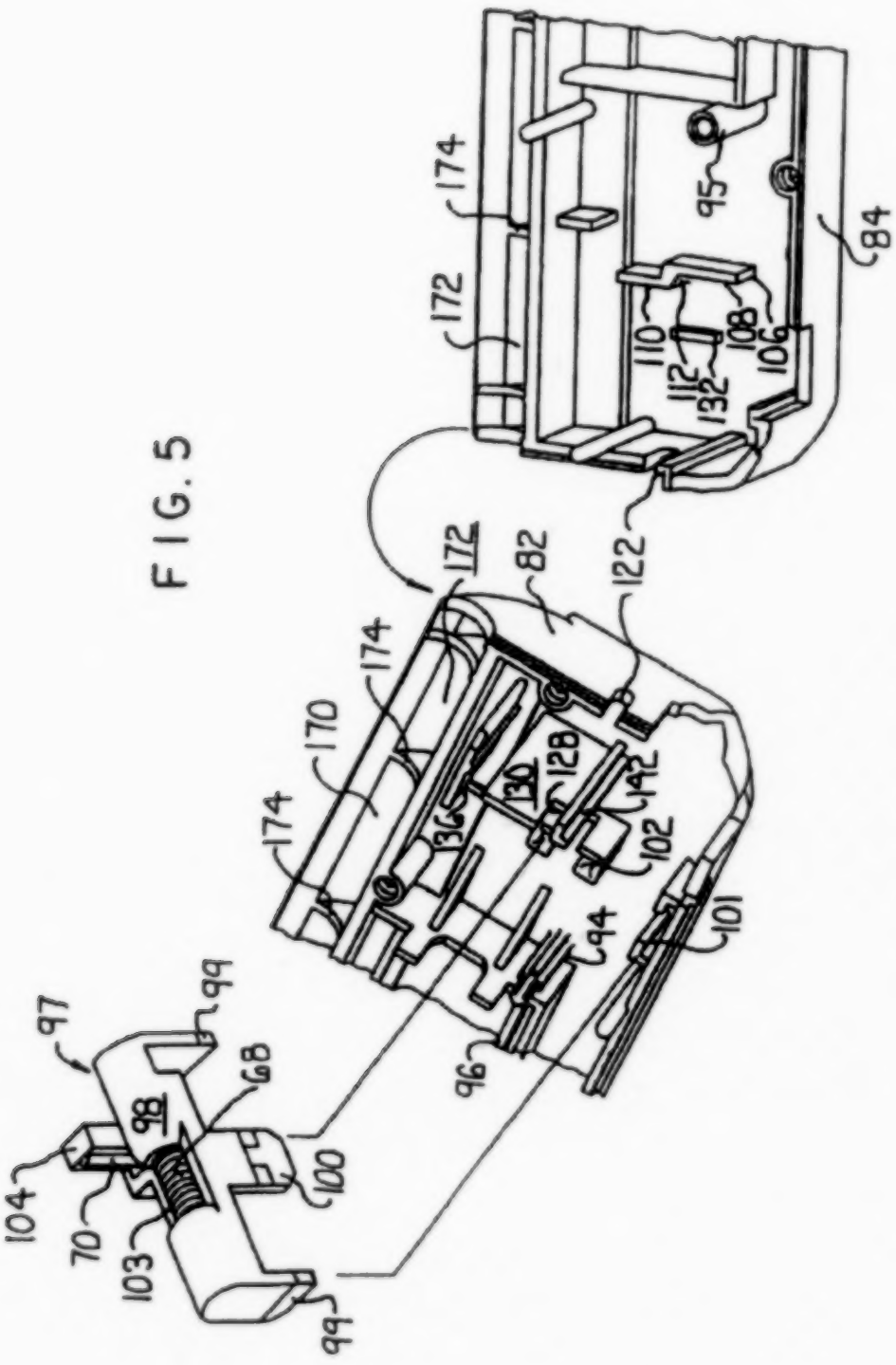
174
172
95
84
110
112
132
108
106
122
172
82
174
170
174
128
130
136
142
102
94
101
96
97
99
68
98
104
70
103
100
99

FIG. 5

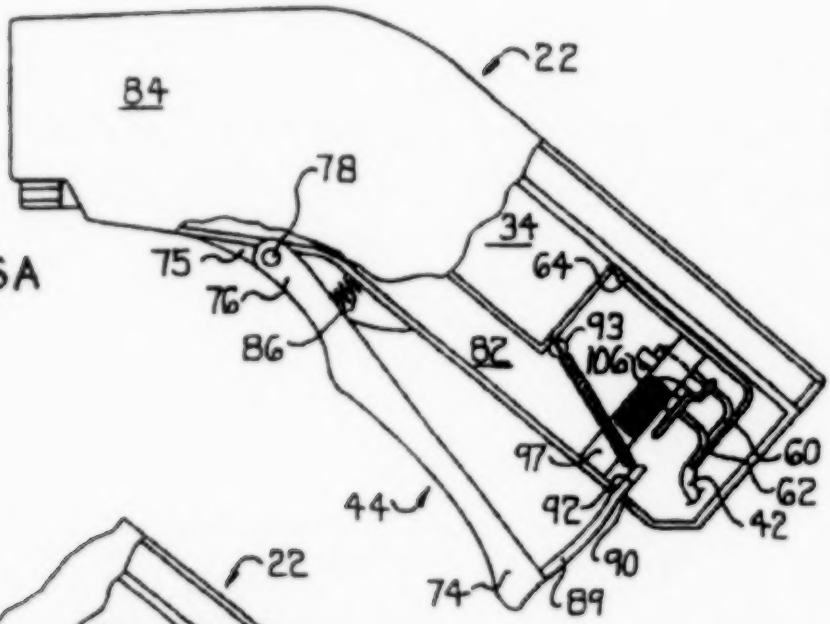


FIG. 6A

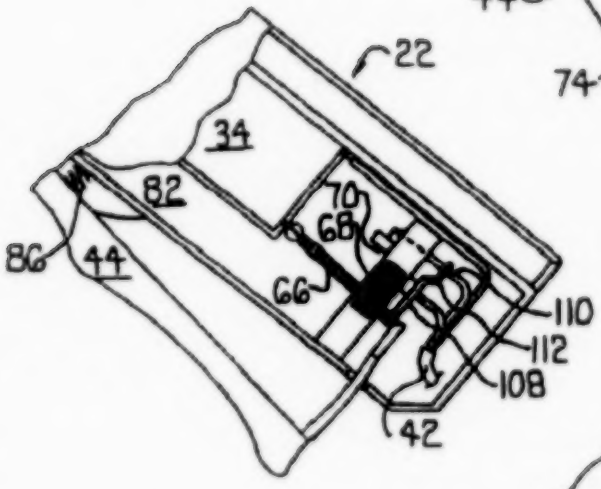


FIG. 6B

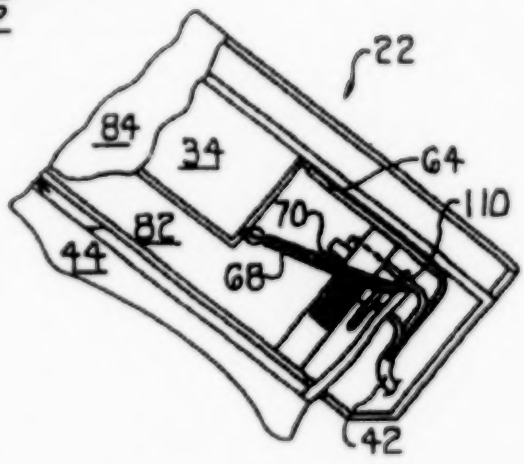


FIG. 6C

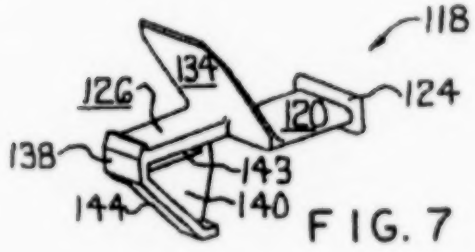


FIG. 7

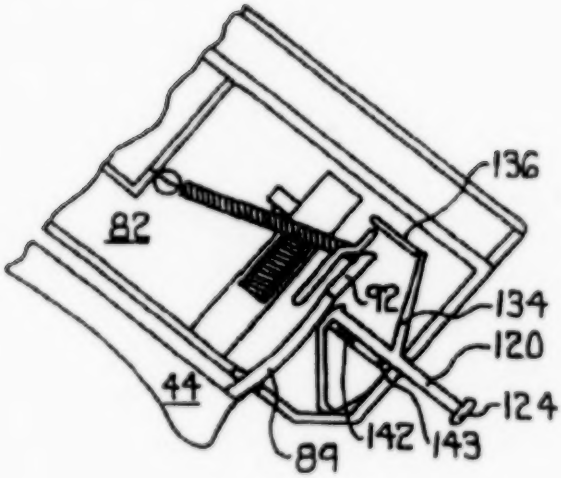


FIG. 7A

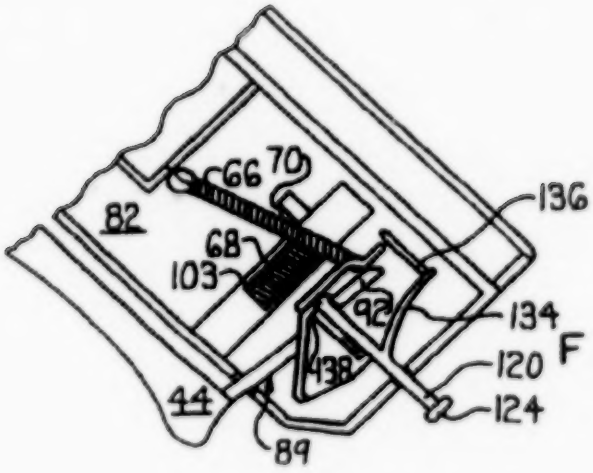


FIG. 7B

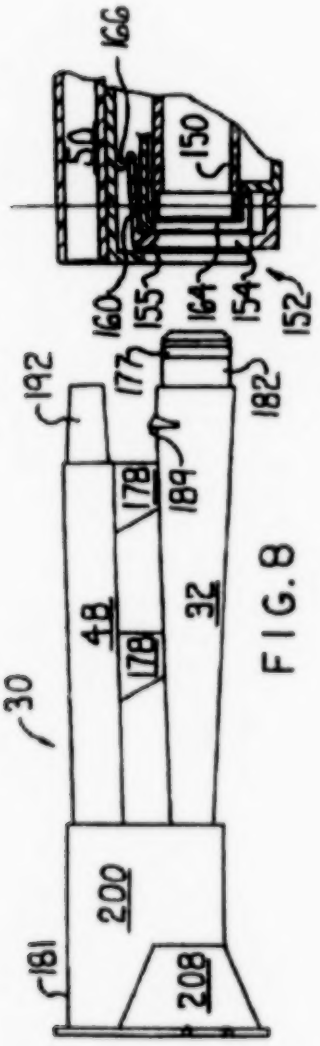


FIG. 8

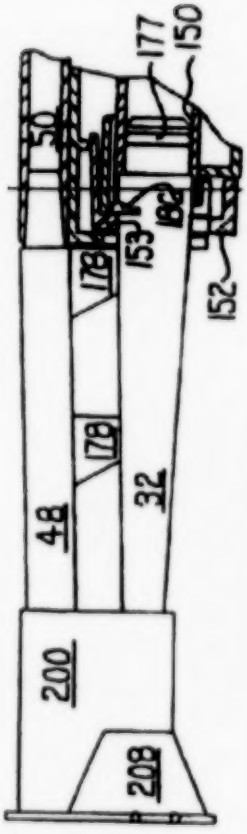


FIG. 11

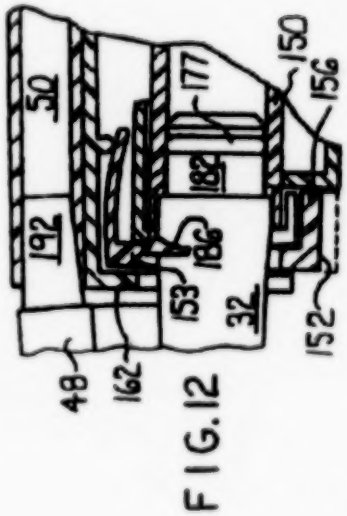


FIG. 12

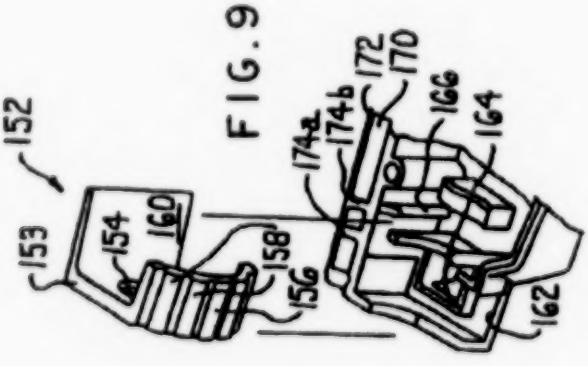


FIG. 9

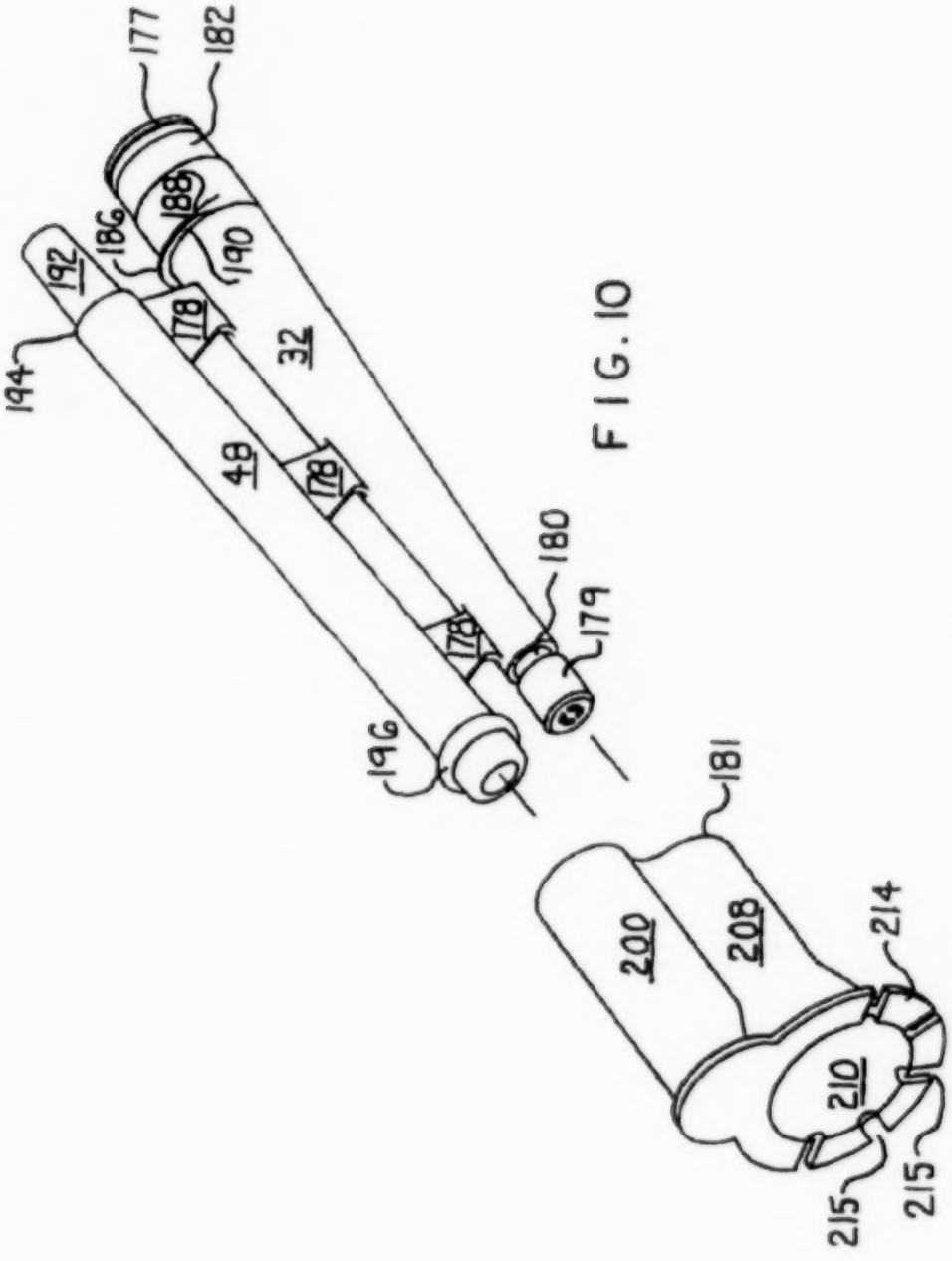
177
182
188
186
190
192
194
178
32
48
178
178
178
180
179
196
181
200
208
214
210
215
215

FIG. 10

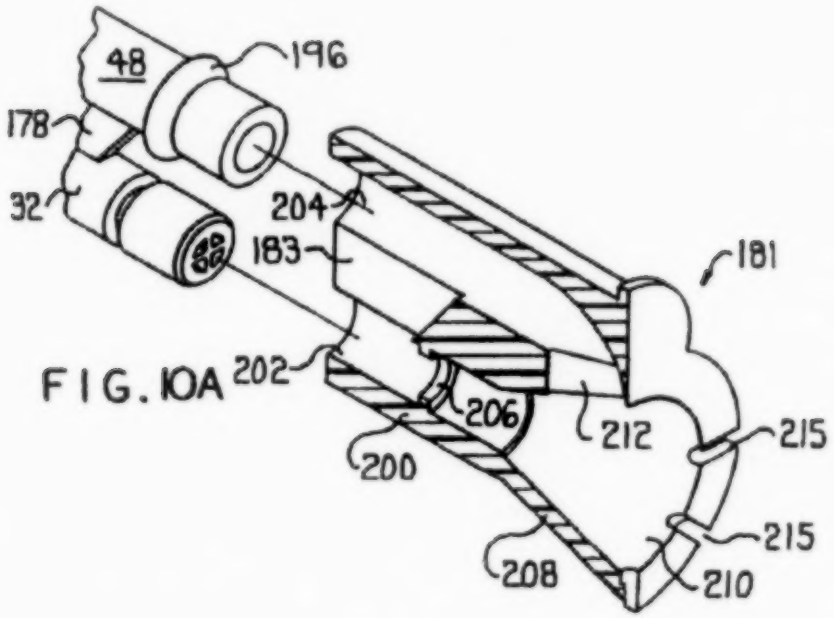


FIG. 10A

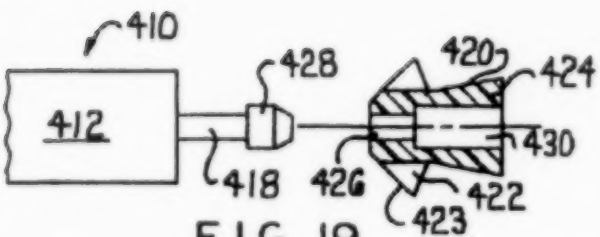


FIG. 19

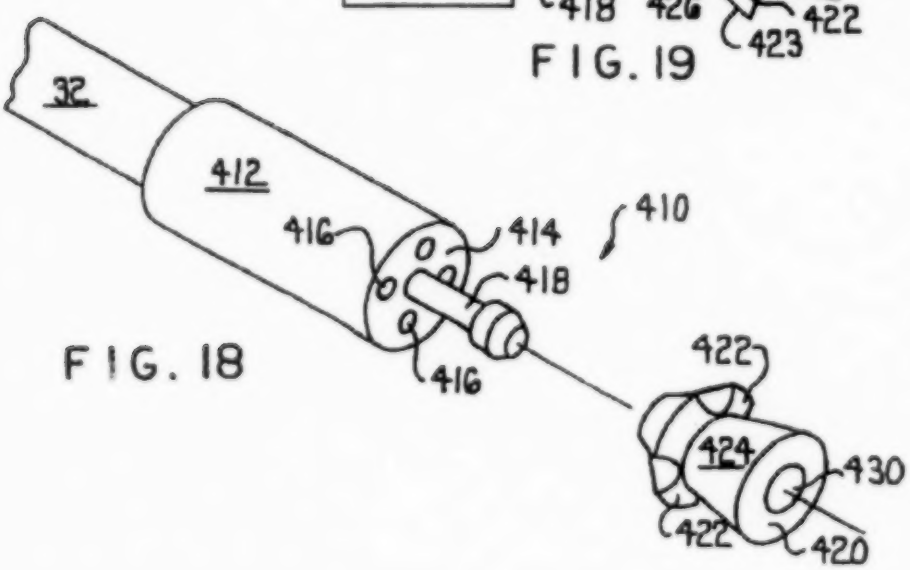


FIG. 18

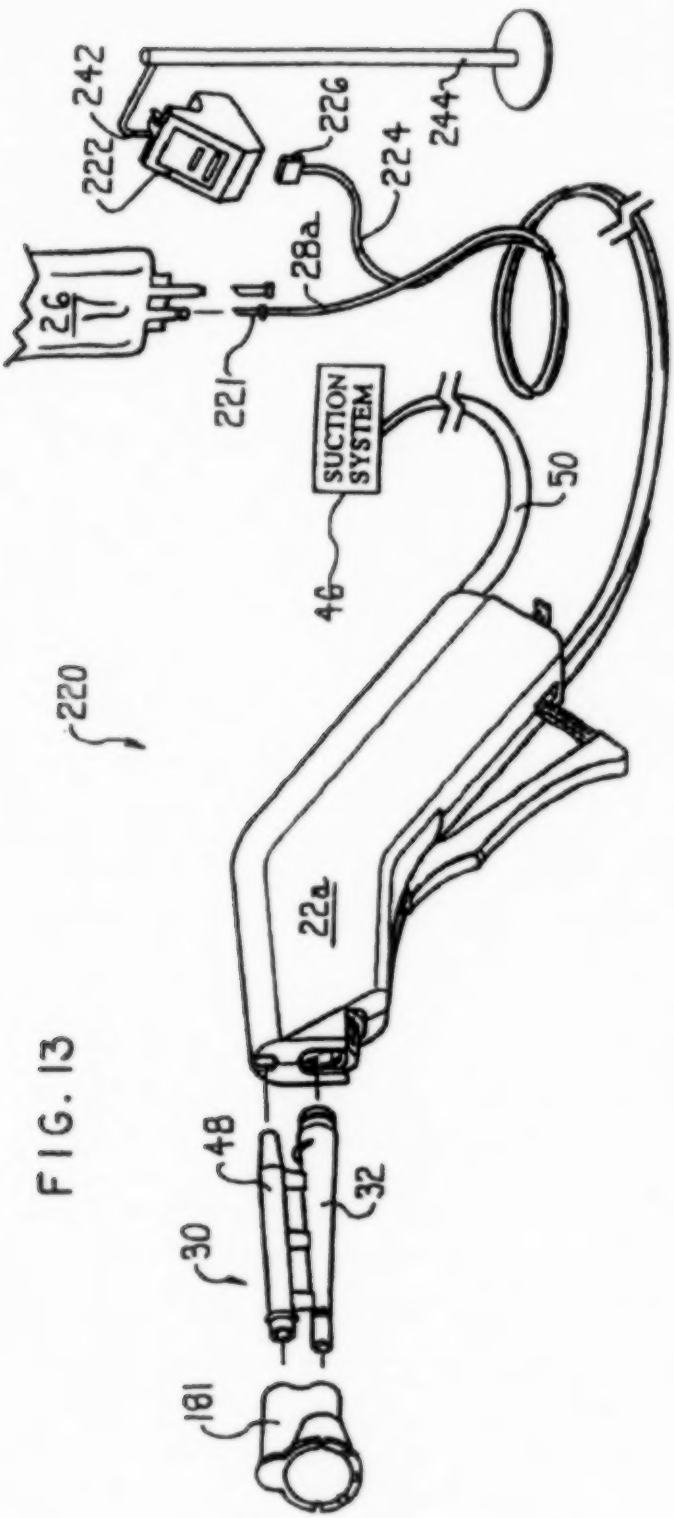
242
222
226
224
244
28a
26
221
SUCTION SYSTEM
50
46
220
22a
48
32
30
181

FIG. 13

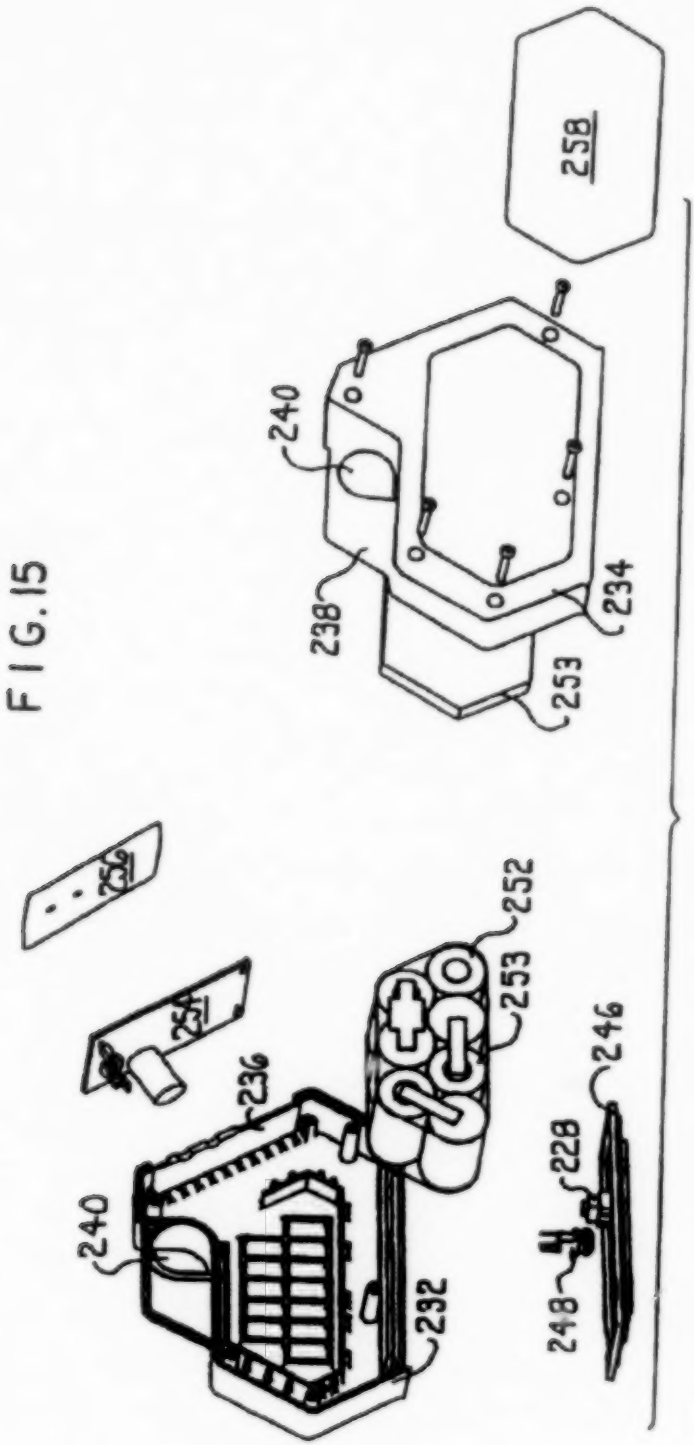


FIG. 15

FIG 17B
FIG.17A

FIG.17

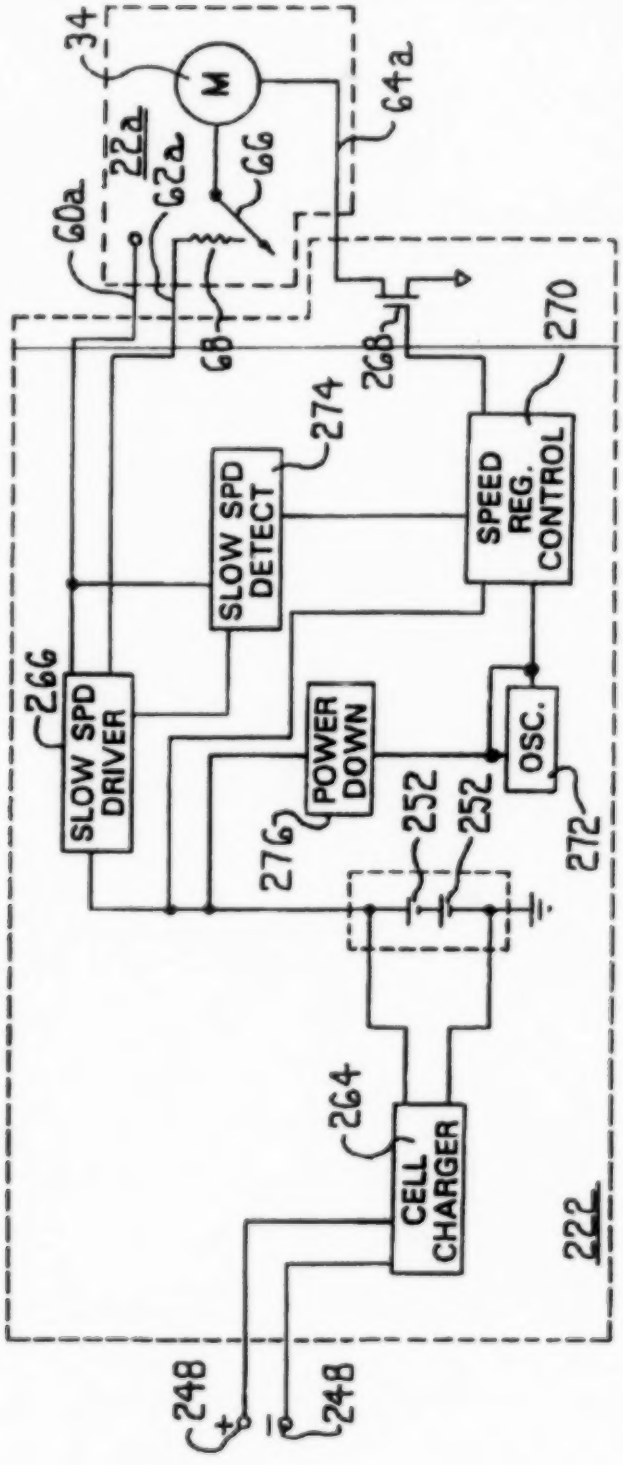
34
M
64a
22a
62a
66
60a
68
268
270
274
SLOW SPD DETECT
SPEED REG. CONTROL
266
SLOW SPD DRIVER
POWER DOWN
OSC.
276
252
252
272
264
CELL CHARGER
222
248
+
-
248

FIG. 16

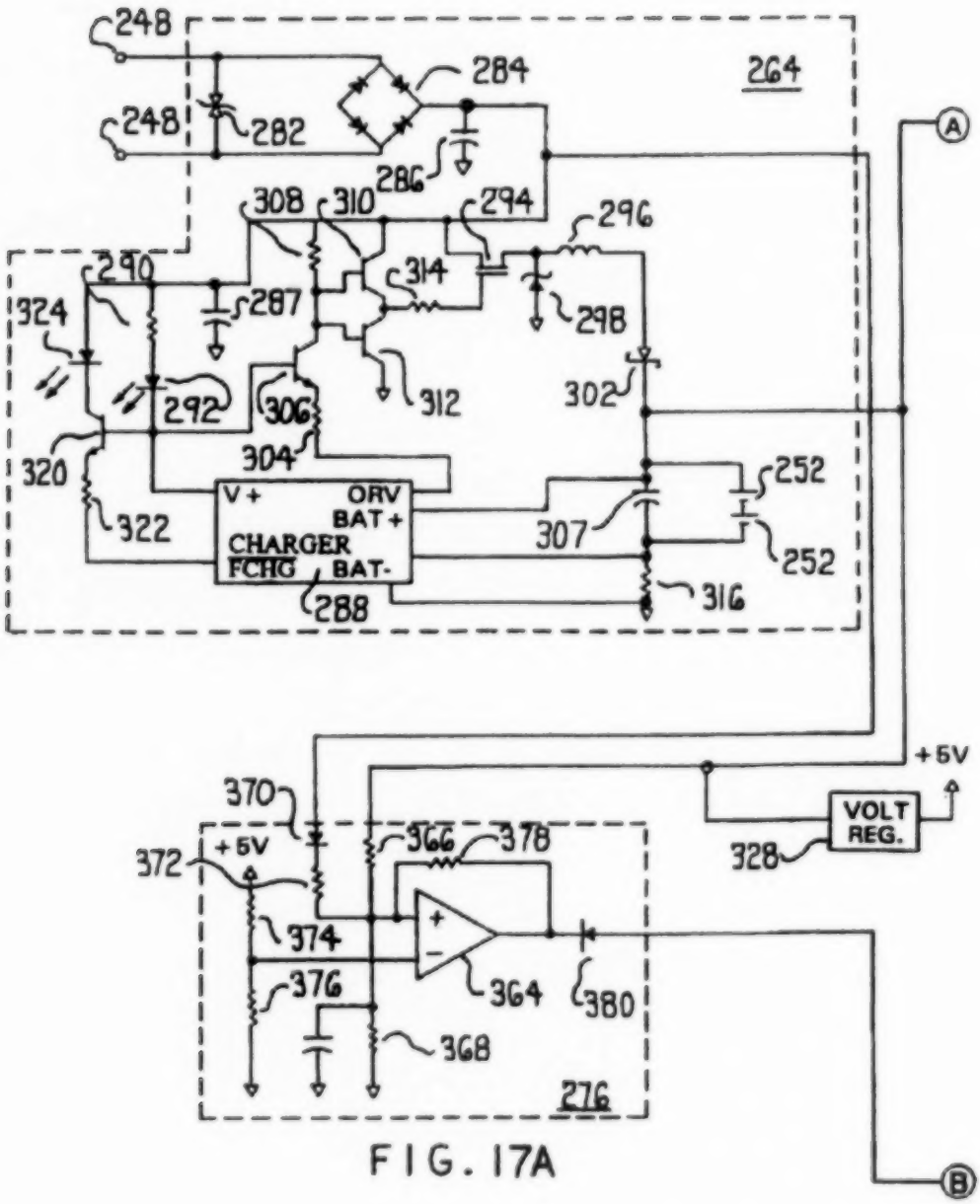
248
284
264
248
282
286
308
310
294
296
290
314
324
287
298
292
306
312
302
320
304
252
V+
ORV
BAT+
322
CHARGER
307
FCHG
BAT-
252
288
316
A
+5V
370
VOLT
REG.
372
+5V
366
378
328
374
364
380
376
368
276
B

FIG. 17A

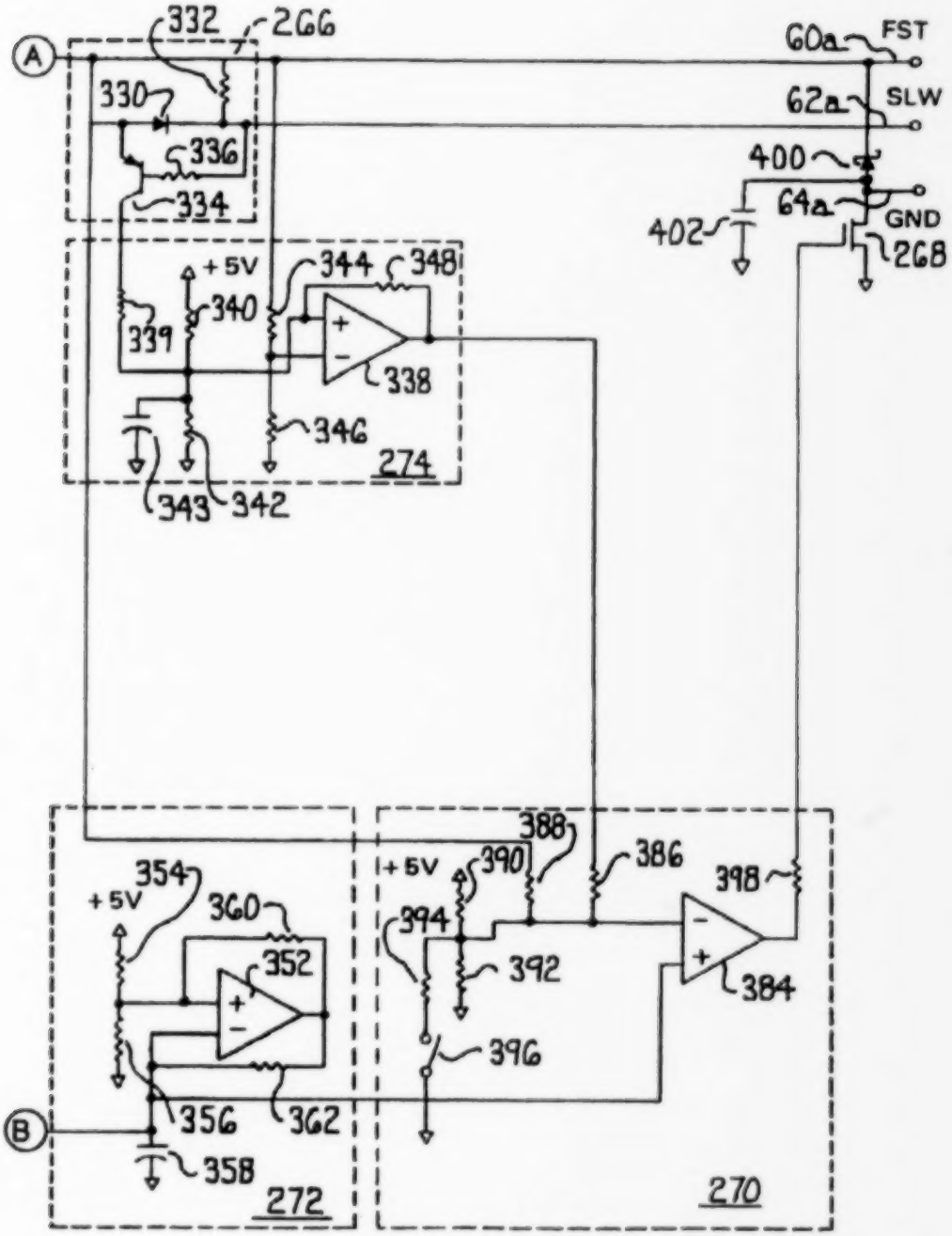
332
266
A
330
336
334
60a
FST
62a
SLW
400
64a
GND
402
268
+5V
344
348
340
339
338
346
274
343
342
388
+5V
390
386
398
354
+5V
360
352
394
392
384
396
B
356
362
358
272
270

FIG. 17B

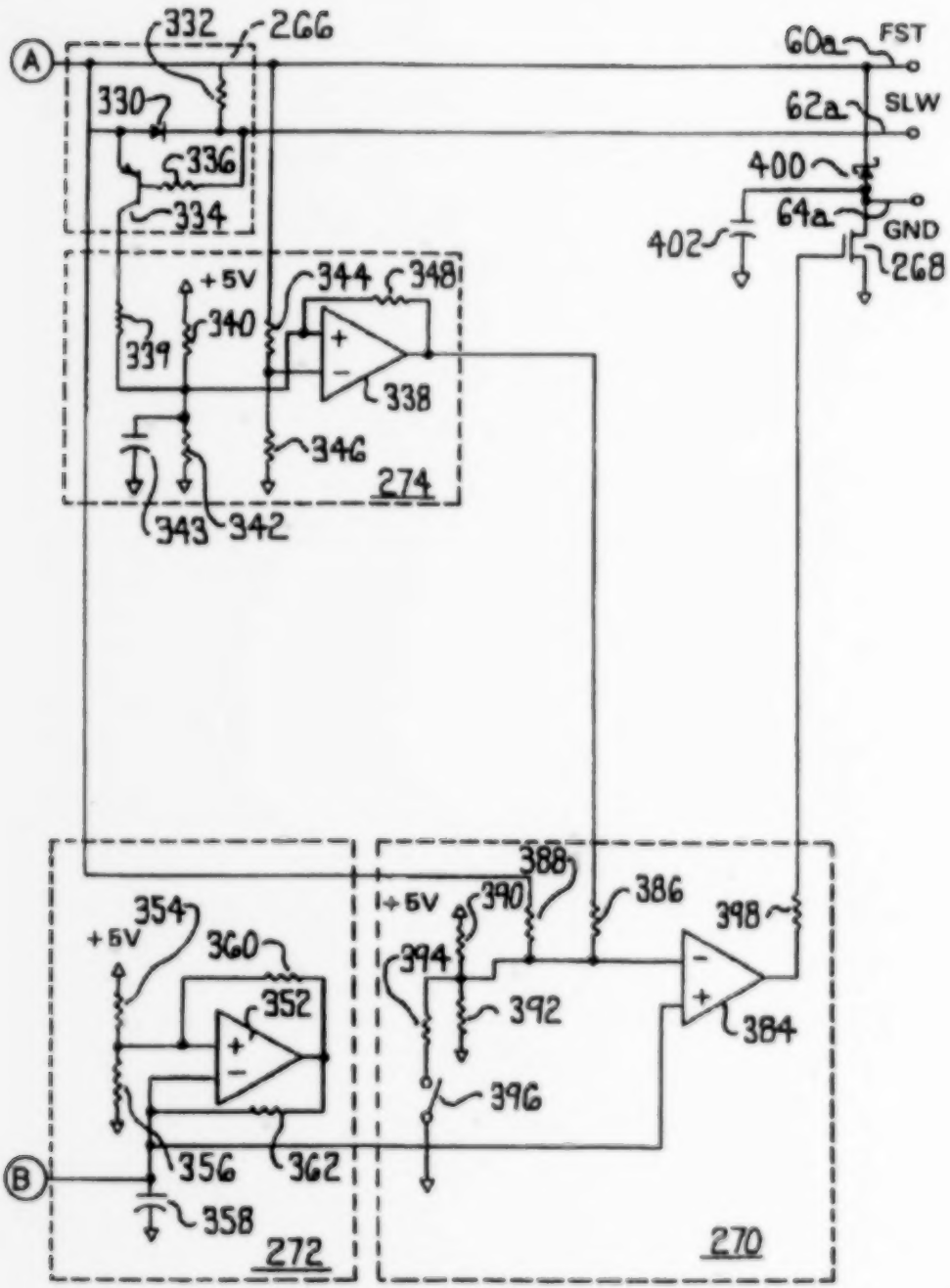

A
332
266
60a
FST
330
62a
SLW
336
400
334
64a
GND
402
268
+5V
344
348
340
339
338
346
274
343
342
388
+5V
390
386
398
354
+5V
360
394
352
392
384
396
356
362
B
358
272
270


FIG. 17B

# The United States of America

## The Director of the United States Patent and Trademark Office

*Has received an application for a patent for a new and useful invention. The title and description of the invention are enclosed. The requirements of law have been complied with, and it has been determined that a patent on the invention shall be granted under the law.*

*Therefore, this*

## United States Patent

*Grants to the person(s) having title to this patent the right to exclude others from making, using, offering for sale, or selling the invention throughout the United States of America or importing the invention into the United States of America for the term set forth below, subject to the payment of maintenance fees as provided by law.*

*If this application was filed prior to June 8, 1995, the term of this patent is the longer of seventeen years from the date of grant of this patent or twenty years from the earliest effective U.S. filing date of the application, subject to any statutory extension.*

*If this application was filed on or after June 8, 1995, the term of this patent is twenty years from the U.S. filing date, subject to any statutory extension. If the application contains a specific reference to an earlier filed application or applications under 35 U.S.C. 120, 121 or 365(c), the term of the patent is twenty years from the date on which the earliest application was filed, subject to any statutory extensions.*

Jon W. Dudas

*Director of the United States Patent and Trademark Office*

## NOTICE

*If the application for this patent was filed on or after December 12, 1980, maintenance fees are due three years and six months, seven years and six months, and eleven years and six months after the date of this grant, or within a grace period of six months thereafter upon payment of a surcharge as provided by law. The amount, number of timing of the maintenance fees required may be changed by law or regulation. Unless payment of the applicable maintenance fee is received in the United States Patent and Trademark Office on or before the date the fee is due or within a grace period of six months thereafter, the patent will expire as of the end of such grace period.*

US007144383B2

(12) **United States Patent**
**Arnett et al.**

(10) **Patent No.: US 7,144,383 B2**
(45) **Date of Patent: *Dec. 5, 2006**

(54) **SURGICAL/MEDICAL IRRIGATING HANDPIECE WITH VARIABLE SPEED PUMP, INTEGRATED SUCTION AND BATTERY PACK**

(75) Inventors: **Jeffery D. Arnett**, Kalamazoo, MI (US); **Nicholas V Gately**, Portage, MI (US); **David H. Grulke**, Battle Creek, MI (US); **Ruth A. Hibbs**, Saline, MI (US); **James L Sertic**, Kalamazoo, MI (US)

(73) Assignee: **Stryker Corporation**, Kalamazoo, MI (US)

( * ) Notice: Subject to any disclaimer, the term of this patent is extended or adjusted under 35 U.S.C. 154(b) by 0 days.

This patent is subject to a terminal disclaimer.

(21) Appl. No.: **10/838,890**

(22) Filed: **May 4, 2004**

(65) **Prior Publication Data**

US 2004/0210186 A1 Oct. 21, 2004

**Related U.S. Application Data**

(63) Continuation of application No. 09/460,705, filed on Dec. 14, 1999, now Pat. No. 6,746,419, which is a continuation of application No. 09/009,657, filed on Jan. 20, 1998, now Pat. No. 6,022,329, which is a continuation of application No. 08/559,133, filed on Nov. 17, 1995, now Pat. No. 5,718,668, which is a continuation of application No. 08/049,144, filed on Apr. 19, 1993, now Pat. No. 5,470,305.

(51) **Int. Cl.**
*A61M 3/00* (2006.01)
*A61M 3/02* (2006.01)

(52) **U.S. Cl.** ..... **604/35**; 604/153; 604/246; 604/902; 601/155; 601/161

(58) **Field of Classification Search** ..... 601/155, 601/154, 160–165; 604/153, 246, 631, 902, 604/19, 28, 30–35, 119; 239/93, 320, 239, 239/263.1, 526

See application file for complete search history.

(56) **References Cited**

U.S. PATENT DOCUMENTS

| | | | |
|---|---|---|---|
| 509,220 | A | 11/1893 | Gustafson |
| 602,866 | A | 4/1898 | Schroeder |
| 738,503 | A | 9/1903 | Wasers |
| 790,353 | A | 5/1905 | Estlingen |
| 1,317,851 | A | 10/1919 | Arnett |
| 1,503,279 | A | 7/1924 | Nixon |
| 1,538,007 | A | 5/1925 | Schellin |
| 1,846,596 | A | 2/1932 | Hertzberg |

(Continued)

FOREIGN PATENT DOCUMENTS

| | | | |
|---|---|---|---|
| DE | 24 16 099 | 4/1975 | |

(Continued)

OTHER PUBLICATIONS

Copy of Ethicon, Pfizer/Valley Lab and Bard/Davol photos (10 photos) Jun. 25, 1993.

(Continued)

*Primary Examiner*—Danton DeMille

(57) **ABSTRACT**

A medical/surgical irrigating handpiece with both a discharge line through which fluid is applied to the site and a suction line through which the discharge fluid is drawn away. The handpiece has a variable speed pulse pump. A single, variable-speed motor actuates the pump to regulate the pumping rate. Power to actuate the motor comes from a battery pack that remote to the handpiece. A control mechanism attached to the handpiece regulates the energization signal applied to the motor so as to regulate motor speed.

**46 Claims, 17 Drawing Sheets**

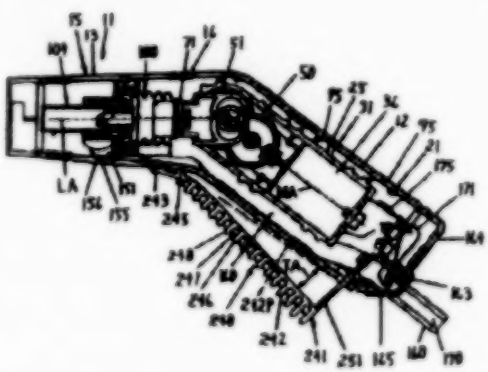

U.S. PATENT DOCUMENTS


| | | | | |
|---|---|---|---|---|
| 2,012,886 | A | 8/1935 | Lowry | |
| 2,112,629 | A | 3/1938 | Lloyd | |
| 2,139,653 | A | 12/1938 | Belfrage | |
| 2,197,995 | A | 4/1940 | Crowley | |
| 2,243,285 | A | 5/1941 | Pope | |
| 2,243,299 | A | 5/1941 | Travers | |
| 2,494,088 | A | 1/1950 | Dority | |
| 2,531,793 | A | 11/1950 | Salek | |
| 2,595,491 | A | 5/1952 | Schweikert | |
| 2,634,883 | A | 4/1953 | North | |
| 2,662,485 | A | 12/1953 | Iffrey | |
| 2,684,049 | A | 7/1954 | Hollis | |
| 2,727,678 | A | 12/1955 | Henderson | |
| 2,733,713 | A | 2/1956 | Kabnick | |
| 2,781,154 | A | 2/1957 | Meredith | |
| 2,802,466 | A | 8/1957 | Thomas | |
| 2,847,007 | A | 8/1958 | Fox | |
| 2,874,696 | A | 2/1959 | Brisel | |
| 2,908,273 | A | 10/1959 | Huston | |
| 2,993,654 | A | 7/1961 | Norton | |
| 3,001,288 | A | 9/1961 | Freedman | |
| 3,014,623 | A | 12/1961 | Horn et al. | |
| 3,039,272 | A | 6/1962 | Frick | |
| 3,044,465 | A | 7/1962 | Anderson et al. | |
| 3,048,121 | A | 8/1962 | Sheesley | |
| 3,065,749 | A | 11/1962 | Brass | |
| 3,070,089 | A | 12/1962 | Dick | |
| 3,135,259 | A | 6/1964 | Evans | |
| 3,208,145 | A | 9/1965 | Turner | |
| 3,227,158 | A | 1/1966 | Mattingly | |
| 3,237,306 | A | 3/1966 | Stumt | |
| 3,263,618 | A | 8/1966 | Carpenter | |
| 3,295,371 | A | 1/1967 | Smith | |
| 3,316,845 | A | 5/1967 | Schumann | |
| 3,353,537 | A | 11/1967 | Knox et al. | |
| 3,359,909 | A | 12/1967 | Johnson et al. | |
| 3,393,673 | A | 7/1968 | Mattingly | |
| 3,416,567 | A | 12/1968 | VonDardel et al. | |
| 3,423,410 | A | 2/1969 | Cammack | |
| 3,426,743 | A | 2/1969 | Chumot et al. | |
| 3,448,766 | A | 6/1969 | Schaefe | |
| 3,452,746 | A | 7/1969 | Shamhouse | |
| 3,484,121 | A | 12/1969 | Quinson | |
| 3,508,546 | A | 4/1970 | Rogers et al. | |
| 3,515,130 | A | 6/1970 | Tsujino | |
| 3,561,433 | A | 2/1971 | Kovach | |
| 3,601,164 | A | 8/1971 | Bruce | |
| 3,605,556 | A | 9/1971 | Erdmann | |
| 3,635,607 | A | 1/1972 | Grise | |
| 3,653,377 | A | 4/1972 | Rebuld | |
| 3,702,141 | A | 11/1972 | Wetherhorn | |
| 3,703,170 | A * | 11/1972 | Ryckman, Jr. | 601/162 |
| 3,713,533 | A | 1/1973 | Reinartz | |
| 3,731,411 | A | 5/1973 | Barber et al. | |
| 3,731,676 | A | 5/1973 | Rebuld | |
| 3,749,090 | A | 7/1973 | Stewart | |
| 3,762,411 | A | 10/1973 | Lloyd et al. | |
| 3,765,802 | A | 10/1973 | Leibermann et al. | |
| 3,768,472 | A | 10/1973 | Hedash et al. | |
| 3,771,522 | A | 11/1973 | Weyuilli et al. | |
| 3,784,235 | A | 1/1974 | Kessler et al. | |
| 3,794,031 | A | 2/1974 | Bloom | |
| 3,853,245 | A | 12/1974 | Branch | |
| 3,861,383 | A | 1/1975 | Kovach | |
| 3,883,074 | A | 5/1975 | Lambert | |
| 3,889,675 | A | 6/1975 | Stewart | |
| 3,895,741 | A | 7/1975 | Nugent | |
| 3,949,753 | A | 4/1976 | Dockhorn | |
| 3,965,934 | A | 6/1976 | Rosenberg | |
| 3,982,540 | A | 9/1976 | Rau | |
| 3,986,266 | A | 10/1976 | Vellender | |
| 3,993,054 | A | 11/1976 | Newman | |
| 4,007,739 | A | 2/1977 | Broe et al. | |
| 4,030,495 | A | 6/1977 | Vang | |
| 4,030,498 | A | 6/1977 | Tompkins | |
| 4,061,142 | A | 12/1977 | Tuttle | |
| 4,099,527 | A | 7/1978 | Howell | |
| 4,111,391 | A | 9/1978 | Pikulla | |
| 4,123,091 | A | 10/1978 | Cosentino et al. | |
| 4,205,676 | A | 6/1980 | Humphrey et al. | |
| 4,215,476 | A | 8/1980 | Armstrong | |
| 4,236,889 | A * | 12/1980 | Wright | 433/86 |
| 4,248,589 | A | 2/1981 | Lewis | |
| 4,250,872 | A | 2/1981 | Tanari | |
| 4,257,416 | A | 3/1981 | Prager | |
| 4,267,947 | A | 5/1981 | Wasserstrom | |
| 4,275,726 | A | 6/1981 | Schael | |
| 4,276,023 | A | 6/1981 | Phillips et al. | |
| 4,278,078 | A | 7/1981 | Smith | |
| 4,282,867 | A | 8/1981 | Du Toit | |
| 4,289,158 | A | 9/1981 | Nebring | |
| 4,290,454 | A | 9/1981 | Shetler | |
| 4,294,251 | A | 10/1981 | Greenwald et al. | |
| 4,300,748 | A | 11/1981 | Kreeley | |
| 4,301,971 | A * | 11/1981 | Cornelius et al. | 239/351 |
| 4,313,699 | A | 2/1982 | Steele | |
| 4,314,560 | A | 2/1982 | Helfgott et al. | |
| 4,346,369 | A | 8/1982 | MacNeill | |
| 4,350,477 | A | 9/1982 | Mazzi | |
| 4,395,205 | A | 7/1983 | McCullough | |
| 4,424,010 | A | 1/1984 | McCullough | |
| 4,424,055 | A | 1/1984 | Herman | |
| 4,428,345 | A | 1/1984 | Banach et al. | |
| 4,428,748 | A | 1/1984 | Peyman et al. | |
| 4,436,495 | A | 3/1984 | McCullough | |
| 4,445,819 | A | 5/1984 | Walling | |
| 4,449,827 | A | 5/1984 | Kurkiewicz | |
| 4,451,069 | A | 5/1984 | Mirone | |
| 4,460,358 | A | 7/1984 | Somerville et al. | |
| 4,468,221 | A | 8/1984 | Mayfield | |
| 4,472,120 | A | 9/1984 | McCullough | |
| 4,482,345 | A | 11/1984 | Chow et al. | |
| 4,484,769 | A | 11/1984 | Lacey | |
| 4,489,750 | A | 12/1984 | Nebring | |
| 4,493,694 | A | 1/1985 | Wuchinich | |
| 4,502,502 | A | 3/1985 | King | |
| 4,508,532 | A | 4/1985 | Drews et al. | |
| 4,509,507 | A | 4/1985 | Yabe | |
| 4,512,066 | A | 4/1985 | McCullough | |
| 4,515,532 | A | 5/1985 | Walling | |
| 4,519,385 | A | 5/1985 | Atkinson et al. | |
| 4,526,573 | A | 7/1985 | Lester et al. | |
| 4,534,758 | A | 8/1985 | Akary et al. | |
| 4,535,773 | A | 8/1985 | Yoon | |
| 4,537,182 | A | 8/1985 | Otani | |
| 4,537,209 | A | 8/1985 | Sano | |
| D281,535 | S | 11/1985 | Atkinson et al. | |
| 4,552,130 | A | 11/1985 | Kinoshita | |
| 4,553,957 | A | 11/1985 | Williams et al. | |
| 4,561,431 | A | 12/1985 | Atkinson | |
| 4,561,856 | A | 12/1985 | Cochran | |
| 4,580,816 | A | 4/1986 | Campbell et al. | |
| 4,583,531 | A | 4/1986 | Matschen | |
| 4,592,749 | A | 6/1986 | Ebling et al. | |
| 4,596,558 | A | 6/1986 | Smith et al. | |
| 4,601,710 | A | 7/1986 | Moll | |
| 4,604,089 | A | 8/1986 | Santangelo et al. | |
| 4,621,770 | A | 11/1986 | Sayen | |
| 4,634,420 | A | 1/1987 | Spinosa et al. | |
| 4,635,621 | A | 1/1987 | Atkinson | |
| 4,647,738 | A | 3/1987 | Diamond | |
| 4,655,197 | A | 4/1987 | Atkinson | |
| 4,655,744 | A | 4/1987 | Thistle et al. | |
| 4,655,752 | A | 4/1987 | Honkanen et al. | |

| | | | |
|---|---|---|---|
| 4,655,754 | A | 4/1987 | Richmond |
| 4,655,765 | A | 4/1987 | Swift |
| 4,662,829 | A | 5/1987 | Nehring |
| 4,667,655 | A | 5/1987 | Ogiu et al. |
| 4,692,140 | A | 9/1987 | Dixon |
| 4,696,669 | A | 9/1987 | Meinhuser |
| 4,705,500 | A | 11/1987 | Reimels et al. |
| 4,741,678 | A | 5/1988 | Nehring |
| 4,748,970 | A | 6/1988 | Nakajima |
| 4,759,349 | A | 7/1988 | Butz et al. |
| 4,764,165 | A | 8/1988 | Reimels et al. |
| 4,765,165 | A | 8/1988 | Reimels et al. |
| 4,765,588 | A | 8/1988 | Atkinson |
| 4,776,840 | A | 10/1988 | Freitas et al. |
| 4,799,481 | A | 1/1989 | Transue et al. |
| 4,817,599 | A | 4/1989 | Drews |
| 4,857,068 | A | 8/1989 | Kaba |
| 4,872,837 | A | 10/1989 | Issalene et al |
| 4,892,469 | A | 1/1990 | McCullough et al. |
| 4,911,621 | A | 3/1990 | McCullough et al. |
| 4,925,450 | A | 5/1990 | Imonti et al |
| 4,927,340 | A | 5/1990 | McCullough |
| 4,935,005 | A | 6/1990 | Haines |
| 4,941,872 | A | 7/1990 | Felix et al. |
| 4,957,483 | A | 9/1990 | Gomer et al. |
| 4,978,282 | A | 12/1990 | Fu et al |
| 4,982,739 | A | 1/1991 | Hennstreet et al. |
| 5,019,038 | A | 5/1991 | Linden |
| 5,037,431 | A | 8/1991 | Samanes et al. |
| 5,046,486 | A | 9/1991 | Grulke et al. |
| 5,049,071 | A | 9/1991 | Davis et al. |
| 5,053,002 | A | 10/1991 | Barlow |
| 5,054,947 | A | 10/1991 | Frank et al. |
| 5,057,015 | A | 10/1991 | Fleer |
| 5,098,387 | A | 3/1992 | Wiest et al. |
| 5,098,405 | A | 3/1992 | Peterson et al. |
| 5,100,058 | A | 3/1992 | Wei |
| 5,120,305 | A | 6/1992 | Boehringer et al |
| 5,142,723 | A | 9/1992 | Lustig |
| 5,147,292 | A | 9/1992 | Kallas et al. |
| 5,170,779 | A | 12/1992 | Ginsberg |
| 5,176,629 | A | 1/1993 | Kallas et al. |
| 5,186,714 | A | 2/1993 | Boudreault et al. |
| 5,188,591 | A | 2/1993 | Dorsey, III |
| 5,195,958 | A | 3/1993 | Phillips |
| 5,195,959 | A | 3/1993 | Smith |
| 5,197,460 | A | 3/1993 | Ito |
| 5,203,769 | A | 4/1993 | Clement et al. |
| 5,224,929 | A | 7/1993 | Remiszewski |
| 5,244,459 | A | 9/1993 | Hill |
| 5,261,905 | A | 11/1993 | Dorsey, III |
| 5,269,750 | A | 12/1993 | Grulke et al. |
| 5,281,214 | A | 1/1994 | Wilkins et al. |
| 5,295,956 | A | 3/1994 | Bates et al. |
| 5,303,735 | A | 4/1994 | Cerola et al. |
| 5,305,735 | A | 4/1994 | Webbes |
| 5,322,503 | A | 6/1994 | Desai |
| 5,322,506 | A | 6/1994 | Kallas |
| 5,333,603 | A | 8/1994 | Schuman |
| 5,334,140 | A | 8/1994 | Phillips |
| 5,336,238 | A | 8/1994 | Holmes et al. |
| 5,348,555 | A | 9/1994 | Zinnanti |
| 5,380,277 | A | 1/1995 | Phillips |
| 5,388,612 | A | 2/1995 | Cerola et al. |
| 5,391,145 | A | 2/1995 | Dorsey |
| D358,200 | S | 5/1995 | Cerola |
| 5,431,676 | A | 7/1995 | Dubrul et al. |
| 5,447,494 | A | 9/1995 | Dorsey, III |
| 5,449,357 | A | 9/1995 | Zinnanti |
| 5,470,305 | A | 11/1995 | Arnett et al. |
| 5,484,402 | A | 1/1996 | Saravia et al. |
| 5,487,649 | A | 1/1996 | Dorsey, III et al. |
| 5,514,089 | A | 5/1996 | Walbrink et al. |
| 5,522,796 | A | 6/1996 | Dorsey, III |
| 5,562,640 | A | 10/1996 | McCabe et al. |
| 5,573,504 | A | 11/1996 | Dorsey, III |
| 5,578,000 | A | 11/1996 | Greff et al. |
| 5,586,977 | A | 12/1996 | Dorsey, III |
| 5,607,391 | A | 3/1997 | Klinger et al. |
| 5,609,573 | A | 3/1997 | Sandock |
| D385,889 | S | 11/1997 | Kallas et al. |
| 5,707,351 | A | 1/1998 | Dorsey, III |
| 5,718,668 | A | 2/1998 | Arnett et al. |
| 5,746,721 | A | 5/1998 | Pasch et al. |
| 5,792,098 | A | 8/1998 | Felix et al. |
| 5,792,108 | A | 8/1998 | Felix et al. |
| 5,807,313 | A | 9/1998 | Delk et al. |
| 5,810,770 | A | 9/1998 | Chin et al. |
| 5,827,218 | A | 10/1998 | Nguyen et al. |
| 5,924,448 | A | 7/1999 | West |
| 5,941,851 | A | 8/1999 | Coffey et al. |
| 6,022,329 | A | 2/2000 | Arnett et al. |
| 6,059,754 | A | 5/2000 | Pasch et al. |
| 6,095,772 | A | 8/2000 | Ramey et al. |
| 6,099,494 | A | 8/2000 | Henniges et al. |
| 6,106,494 | A | 8/2000 | Saravia et al. |
| 6,156,004 | A | 12/2000 | Tremaine et al. |
| 6,162,194 | A | 12/2000 | Shipp |
| 6,176,847 | B1 | 1/2001 | Humphreys, Jr. et al. |
| 6,179,807 | B1 | 1/2001 | Henniges et al. |
| 6,200,292 | B1 | 3/2001 | French et al. |
| 6,213,970 | B1 | 4/2001 | Nelson et al. |
| 6,352,527 | B1 | 3/2002 | Henniges et al. |
| 6,358,224 | B1 | 3/2002 | Tims et al. |
| 6,371,934 | B1 | 4/2002 | Jackson et al. |
| 6,394,996 | B1 | 5/2002 | Lawrence et al. |
| 6,471,668 | B1 | 10/2002 | Henniges et al. |
| 6,483,432 | B1 | 11/2002 | French et al. |
| 6,623,445 | B1 | 9/2003 | Nelson et al. |
| 6,626,827 | B1 | 9/2003 | Felix et al. |
| 6,685,667 | B1 | 2/2004 | Delk et al. |
| 2001/0025160 | A1 | 9/2001 | Felix et al. |
| 2002/0082557 | A1 | 6/2002 | Jackson et al. |

FOREIGN PATENT DOCUMENTS

| | | |
|---|---|---|
| EP | 0 258 901 | 3/1988 |
| FR | 1 325 670 | 3/1963 |
| GB | 1 264 138 | 2/1972 |
| GB | 2 063 674 A | 6/1981 |
| WO | WO81/01794 | 7/1981 |
| WO | WO81/02335 | 8/1981 |
| WO | WO85/03982 | 9/1985 |
| WO | WO86/04247 | 8/1986 |
| WO | WO91/12830 | 9/1991 |
| WO | WO92/21388 | 12/1992 |
| WO | WO93/17733 | 9/1993 |
| WO | WO94/13335 | 6/1994 |
| WO | WO94/19030 | 9/1994 |
| WO | WO94/23773 | 10/1994 |

OTHER PUBLICATIONS

KLI DeCharney Hysteroscopy Pump believed published before Apr. 19, 1993.

Marlow—Unique Products for Advanced Operative Laparoscopy 790—5M.

Select One—™ Minimal Access Surgery System, Introducing theVAC—™ Handcontrolled Suction Irrigation Instrument, ConMed Aspen Surgical Systems, Counsel Jul. 1992, 10M.

Select One—™ Minimal Access Surgery System, The Modular Instrument System for Surgical Endoscopy, SelectOne System by ConMed, Aspen Surgical Systems believed published before Apr. 19, 1993.

Davol—Endo-Flo™ Irrigator, Bard, Davol Inc.; instruction booklet # 041002-0, 9011R, Nov. 1990.

Count On US (Introducing Over 100 Precision Crafted Quality Endosurgery Instruments), Davis+Geck, 1993.
Essar® Suction Irrigator, Why do I need the *Essar* Suction Irrigator? Stewart Research, Inc. believed published before Apr. 19, 1993.
"Simultaneous pulsatile lavage and/or irrigation with suction . . . ", Pulsatile Lavage Debridement System, brochure No. 82-010-5150-0146/2.5M CISS Zimmer, Inc., Snyder Labs Inc., 1982.
Nezhat-Dorsey™ Hydro-Dissection™ Information Booklet Installation/Operating Instructions for "Quick-Disconnect" Probe Tips (2 sheets) believed published before Apr. 19, 1993.
Suction/Irrigator Is No Longer An Issue, Hydro-Dissection System, 556529 PP ICM Jul. 1992, Karl Storz Gmbh & Co. Tuttlengen, West Germany.
A Fully Integrated Laparoscopic Irrigation and Instrumentation System, Cabot Medical, Langhorne, PA Apr. 1992, 10M, L/T (4 sheets).
Advances In Pelviscopy, The Irrigation Pump System, Cabot Medical, Langhorne, PA Apr. 1990 (3 sheets).
InterJET™ , Fluid Management System User' Manual, Smith & Nephew Dyonics Inc., copyright 1992, PN1060170.
Davol, Arthro-Flo® , Instructions For Use, 038657-0 901R C.R. Bard, Inc. Cranston RI, Jan. 1990.
Davol, Arthro-Flo High-Flo Irrigator, Bard, OP-AF0015000 Aug. 1992 5M C.R. Bard Inc. Cranston, RI.
3M Fluid Control System, For Precise Control of all Arthroscopic Procedures. 70-2008-5458-9, 1992 3M.
Davol, Instructions for Use, Simpulse—™ Suction/Irrigator, BARD, 034089-0 (2 sheets) Jan. 1985.
"Introducing the multi-functional instrument for virtually every laparoscopic case", USSC, Auto Suture Company, Copyright 1992, 556529 pp. 10M Jul. 1992.
Davol's Answers to Plaintiff's First Set of Interrogatories dated Jan. 7, 1996.
Davol's Supplemental Answers to Plaintiff's First Set of Interrogatories dated Feb. 14, 1997.
Deposition of Roger E. Darois, pp. 1-177, with Index pp. 1-19 and correction and signature papers 1-3, dated May 7, 1997.
Rule 26(a) (2) Expert Report of Dr. Harrith M. Hasson Relating to Davol's Defenses to Stryker's Infringement Claims Under the '402 Patent dated Oct. 29, 1997 including Exhibits A-D.
Rule 26 (a) (2) Expert Report of Roger E. Darois Relating to Davol's Defenses to Stryker's Infringment Claims Under the '402 Patent dated Oct. 30, 1997 including exhibits A-D.
Rule 26 (a) (2) Rebuttal Expert Report of Dr. Harrith M. Hasson, M.D. Relating to Stryker's Infringement of United States Patent No. 5 391 145 and United States Patent No. 5 586 977, dated Dec. 8, 1997.
Deposition of Harrith M. Hasson, pp.1-281 with index pages 1-32 dated Feb. 13, 1998.
Davol's Supplemental Answers to Plaintiff's First Set of Interrogatories dated Feb. 14, 1997.
Ruling on Claim Construction Disputes dated Apr. 24, 1998.
Trial-vol. IV. IV, Nov. 17, 1998: (Hope-Cross; Darois-direct, voir dire, Cross) multi-channel fiber-optic rotary multipage 35-43 (actual pp. 524-785).
Trial-vol. V, Nov. 18, 1998 (Darois-direct) multipage 623-785; actual pp. 3-44.
Memorandum Opinion and Order Denying Motion for Judgment as a Matter of Law dated May 26, 1999.
Arthur D. Little (Tsals) Dec. 8, 1992 letter to Davol.
Bard (Brad Cilley) Oct. 16, 1992 fax to John Skreenock.
Arthur D. Little (Tsals) Nov. 12, 1992 fax to John Skreenock (Davol).
Arthur D. Little (Tsals) Dec. 17, 1992 letter to John Skreenock.
Arthur D. Little (Tsals) Jan. 28, 1993 letter to John Skreenock.
Saline Pump Development Program, Davol Inc., Jan. 18, 1993, Cambridge, MA.
Teltech Nov. 2, 1992 search for John Skreenock re Scroll Pumps.
Arthur D. Little (Sword) Sep. 8, 1992 letter to Albert Solis.
Davol (Silva) Jan. 4, 1993 letter to Arthur D. Little.
Saline Scroll Pump Development Program.
Scroll Technology in Medical Products.

* cited by examiner

U.S. Patent Dec. 5, 2006 Sheet 1 of 17 US 7,144,383 B2

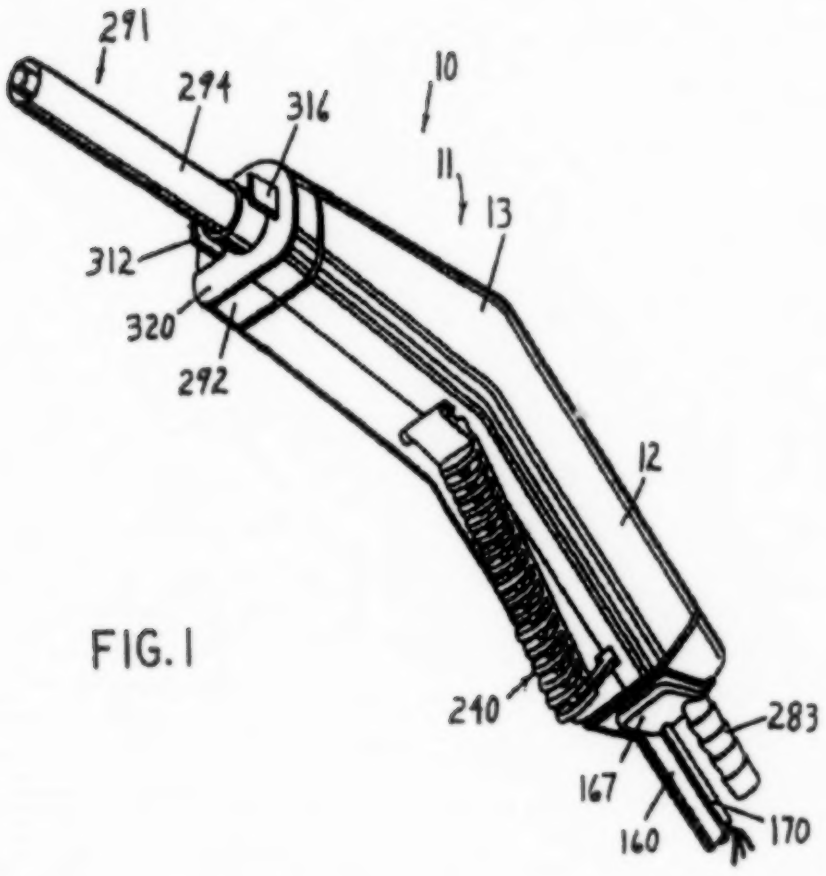


FIG. 1

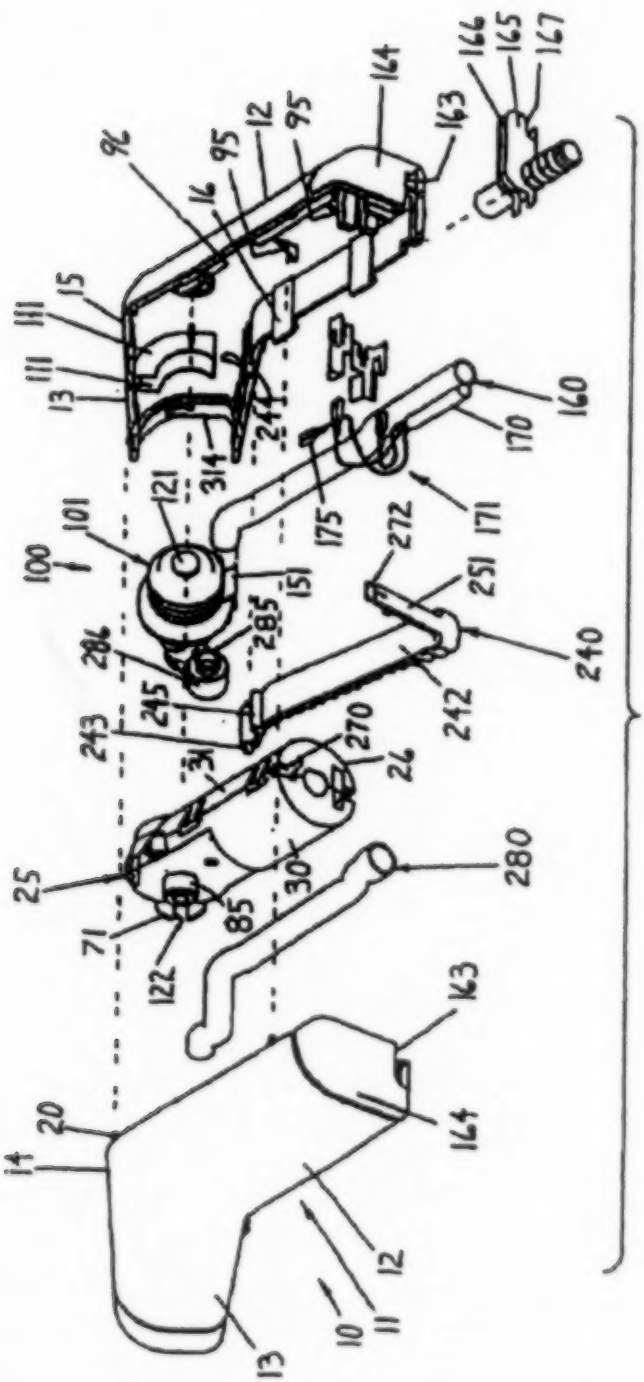

10
11
12
13
14
20
25
26
30
31
71
85
100
101
111
111
12
13
15
16
95
95
96
121
122
160
163
163
164
164
165
166
167
170
171
175
240
242
243
245
251
270
272
280
285
286
314
244
151


FIG. 2

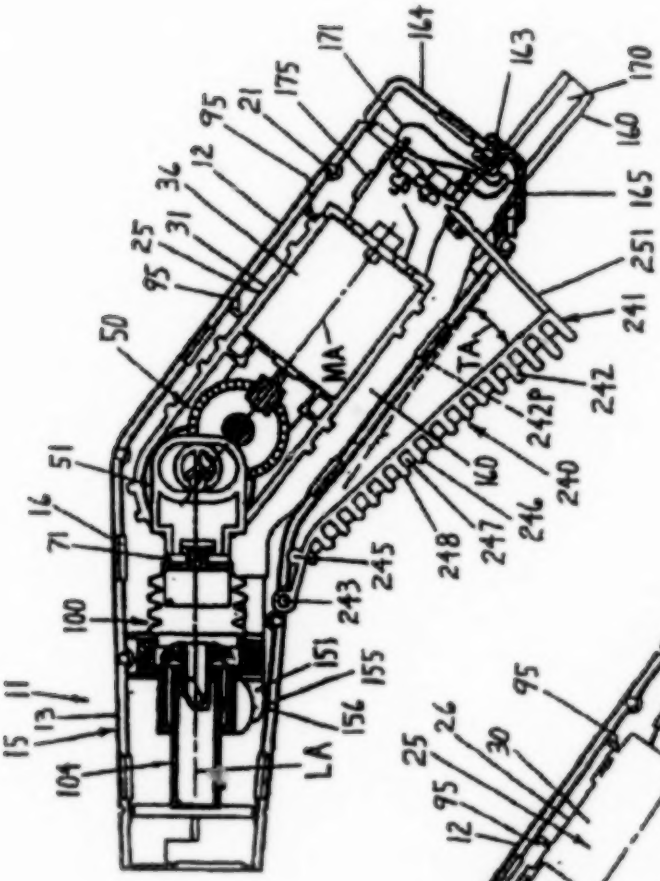
164
171
163
170
175
21
95
12
36
31
25
95
160
165
251
241
50
MA
TA
242
242P
240
160
246
247
248
245
243
51
16
71
100
151
155
156
11
13
15
104
LA

FIG.4

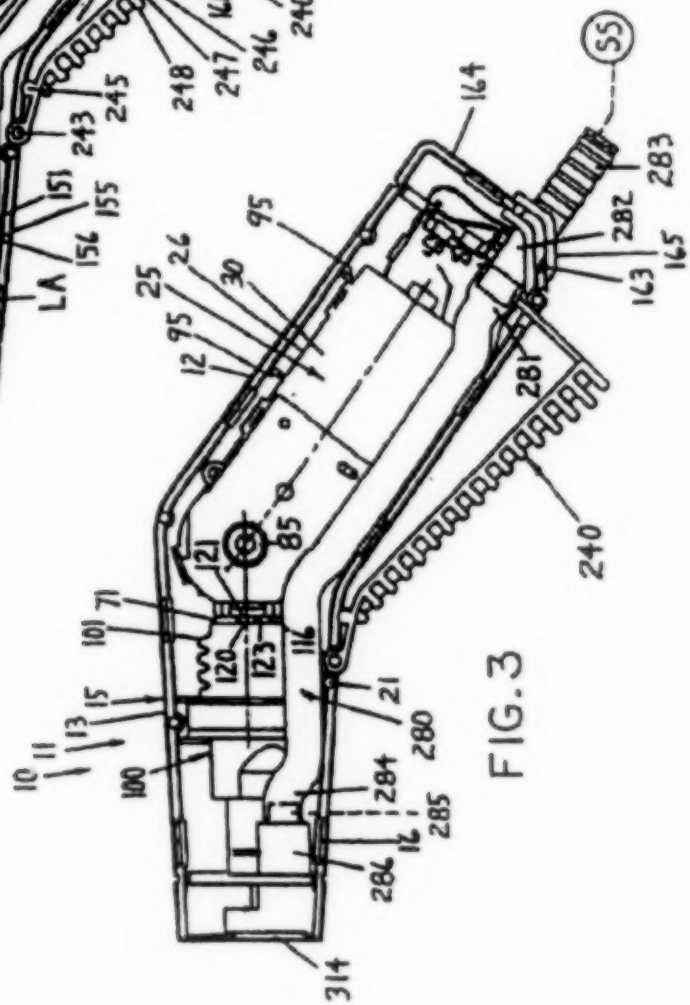
SS
164
283
282
165
163
95
26
30
25
95
12
281
240
85
121
71
101
120
123
116
21
280
15
13
11
10
100
284
285
16
286
314

FIG.3

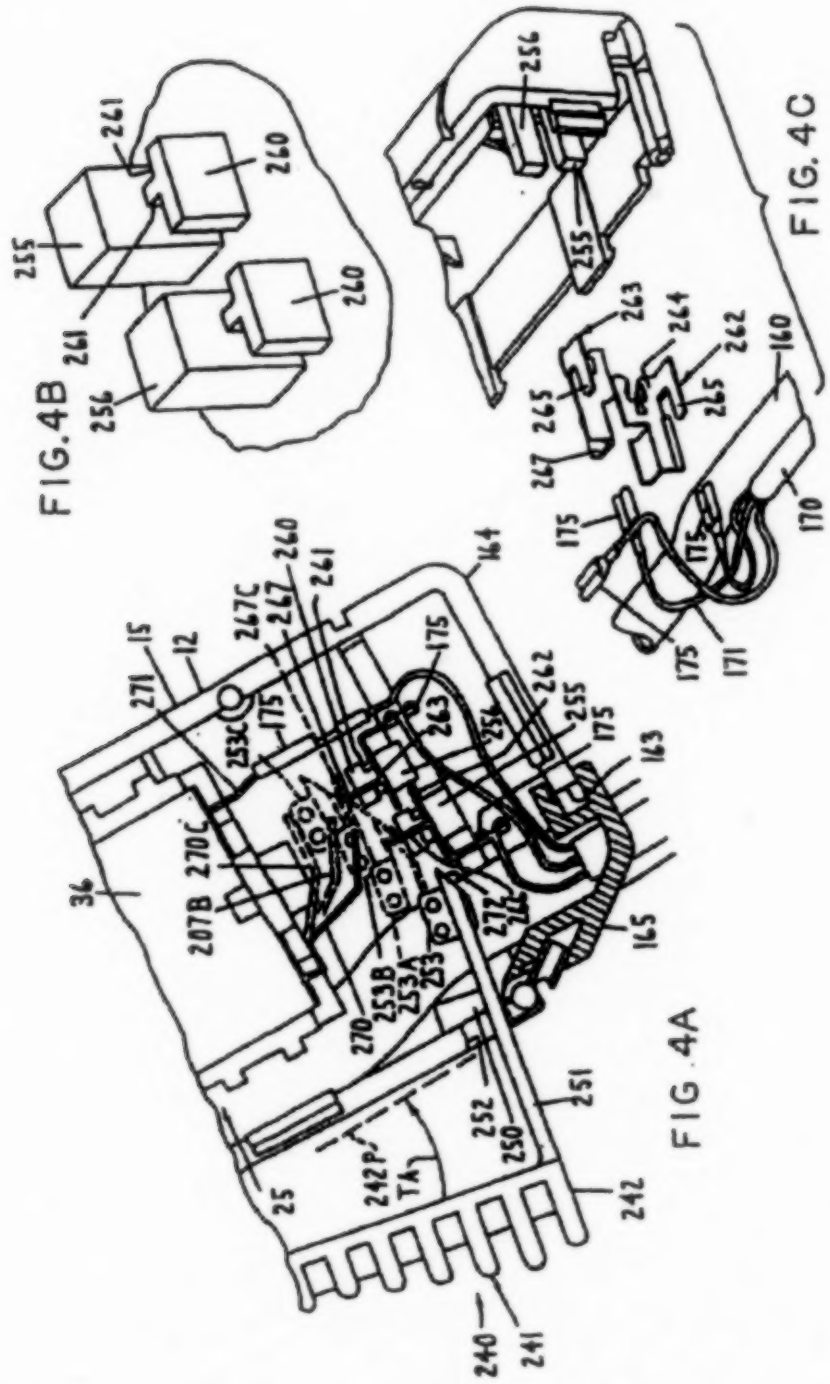
FIG.4B
FIG.4C
FIG.4A

FIG. 5

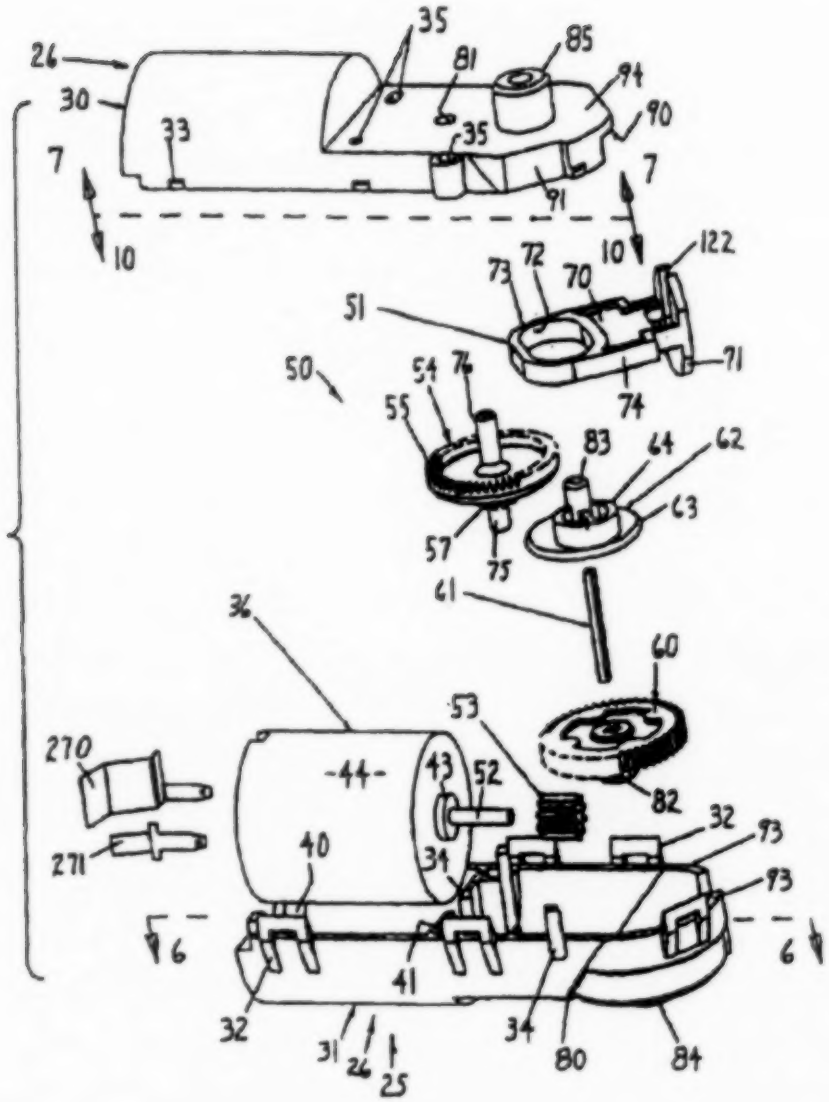
26
30
33
35
81
85
94
90
91
7
10
122
73
72
70
51
71
74
50
54
55
83
64
62
63
57
75
61
36
60
53
82
270
271
44
43
52
40
34
32
93
41
6
31
24
25
80
84

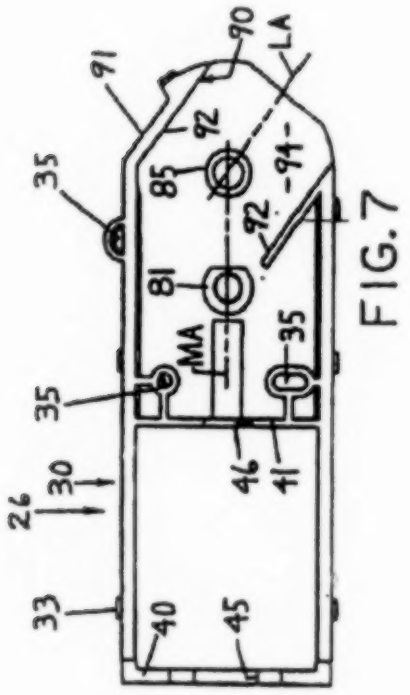


FIG. 7

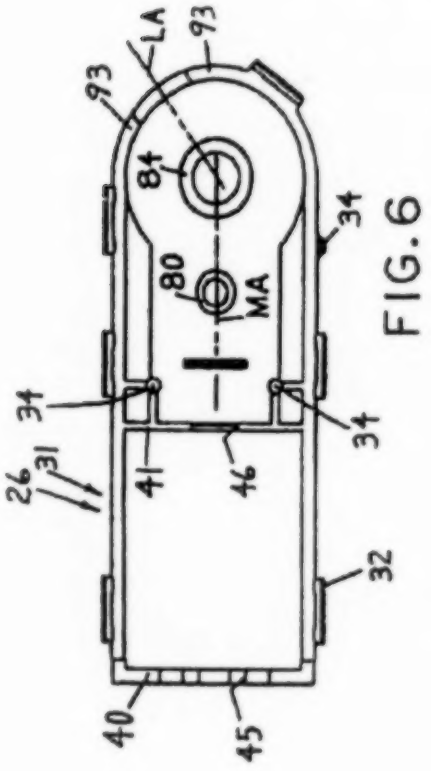


FIG. 6

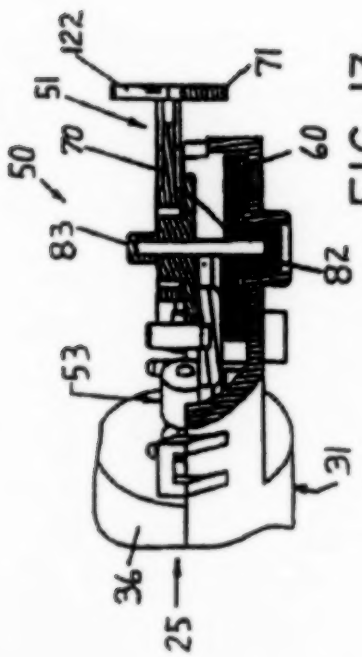


FIG. 13

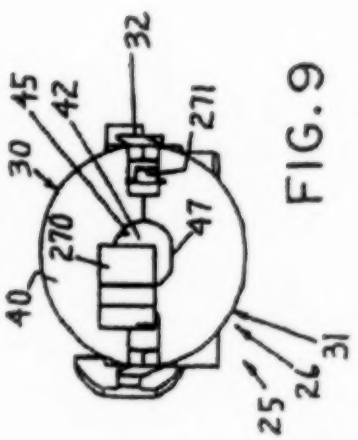


FIG. 9

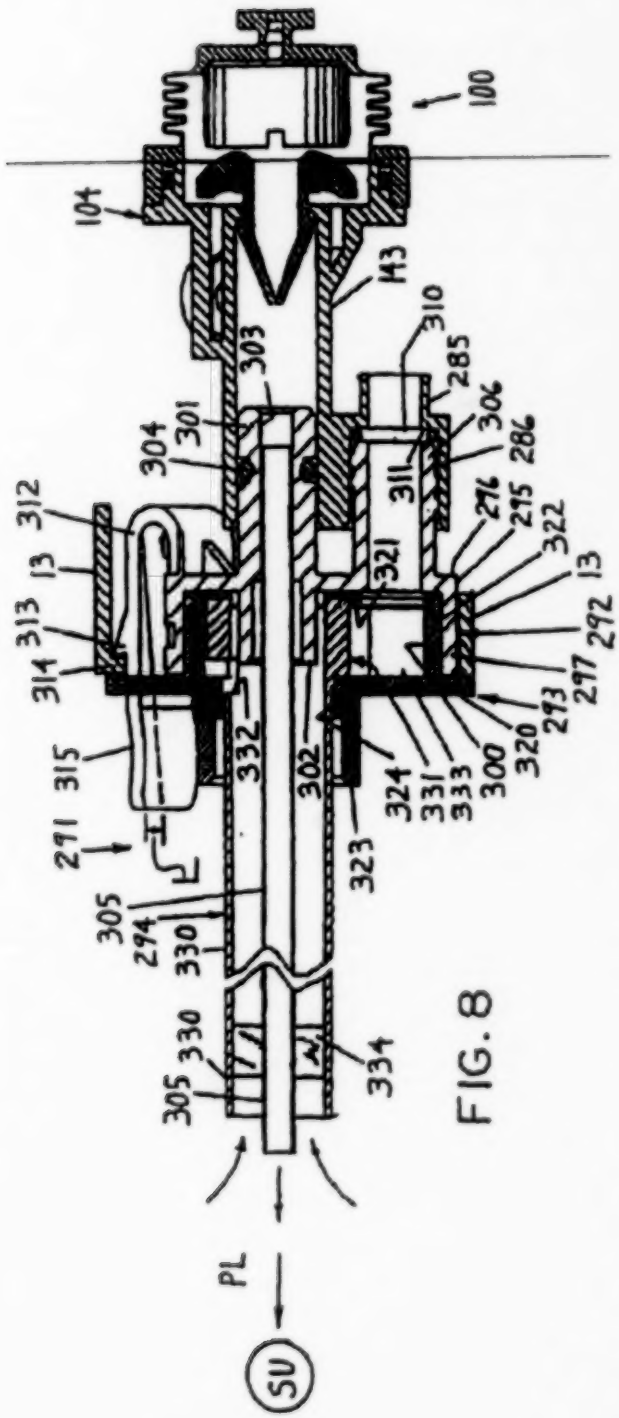
100
104
143
310
285
306
286
311
303
301
304
312
13
313
314
315
291
305
294
330
332
302
323
324
331
333
300
320
293
297
292
13
322
295
296
321
PL
SU

FIG. 8

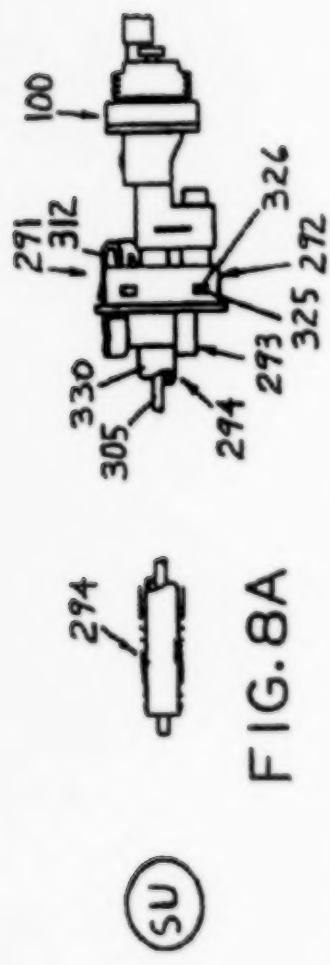
100
291
312
326
272
325
293
330
305
294
294
SU

FIG. 8A

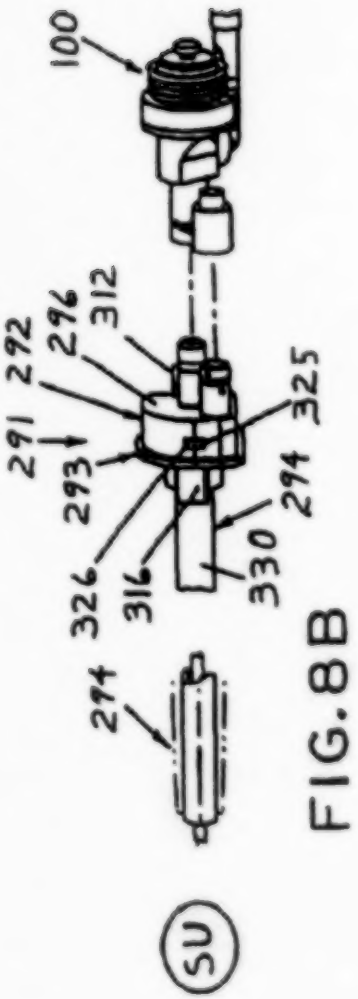
100
291
272
296
312
325
293
294
326
316
330
294
SU

FIG. 8B

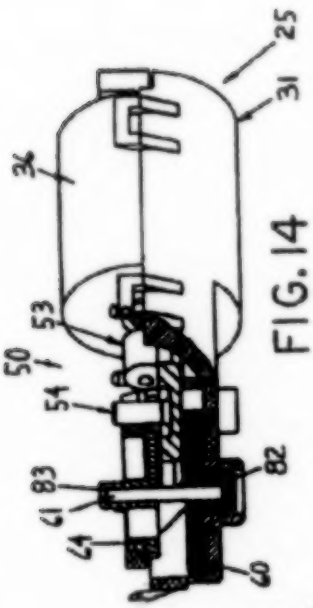


FIG. 14

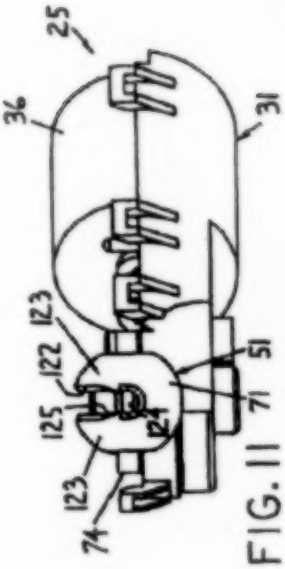


FIG. 11

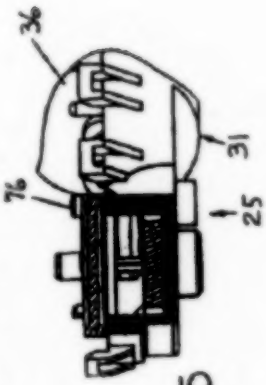


FIG. 15

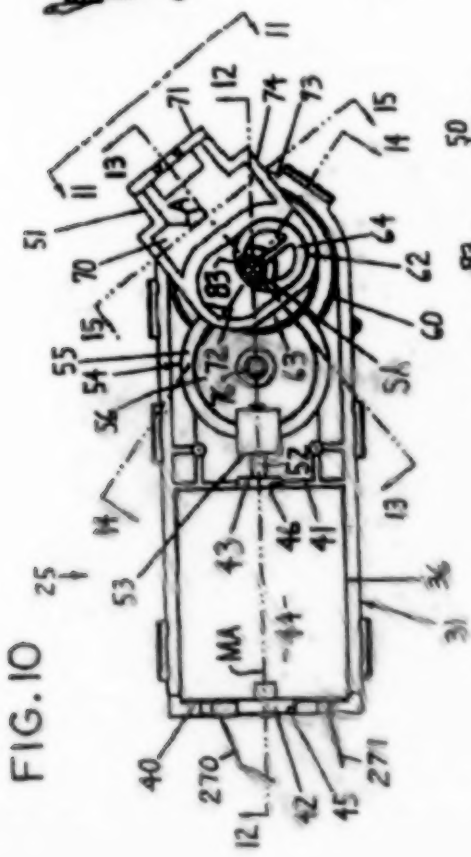


FIG. 10

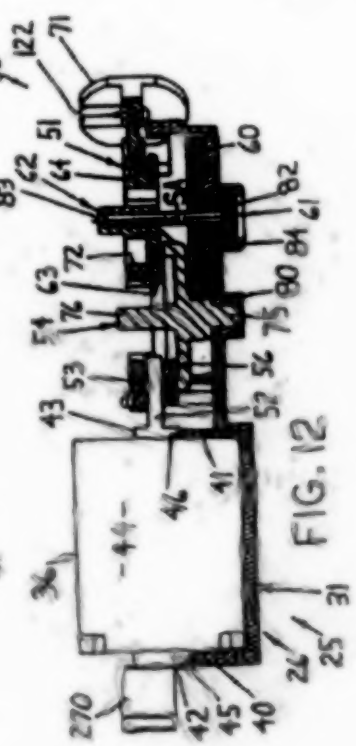


FIG. 12

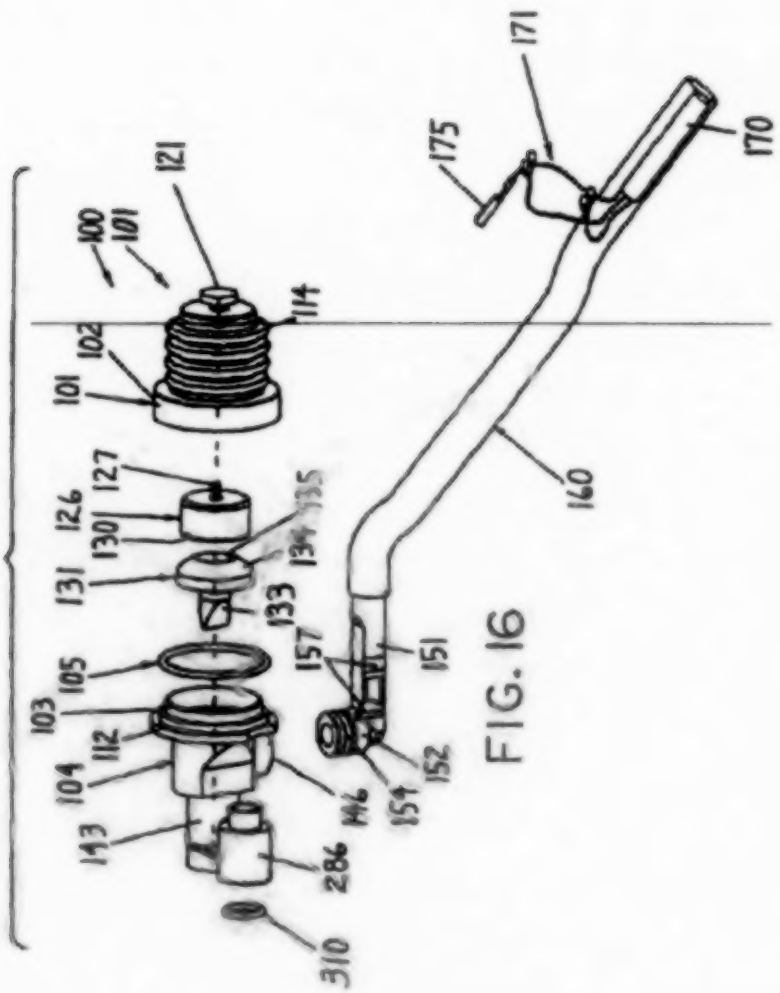
100
101
121
114
102
101
127
126
130
131
133
134
135
105
103
112
104
143
286
310
146
154
152
157
151
160
175
171
170

FIG. 16

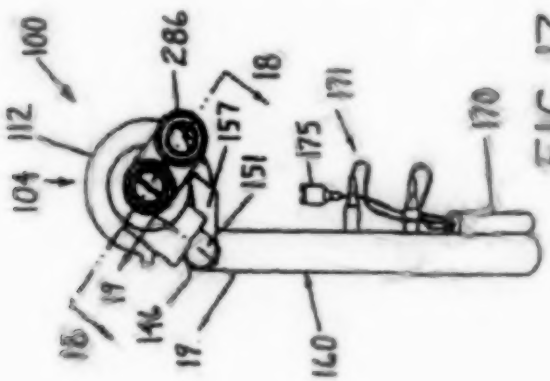
100
286
18
112
104
157
151
175
171
170
19
146
19
18
160

FIG. 17

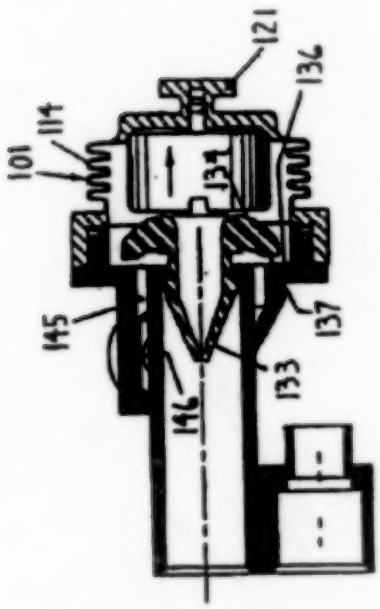


FIG. 18A

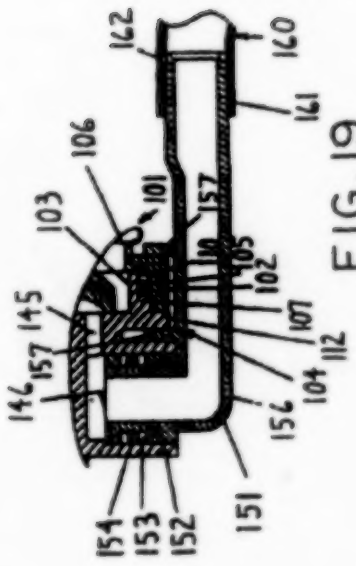


FIG. 19

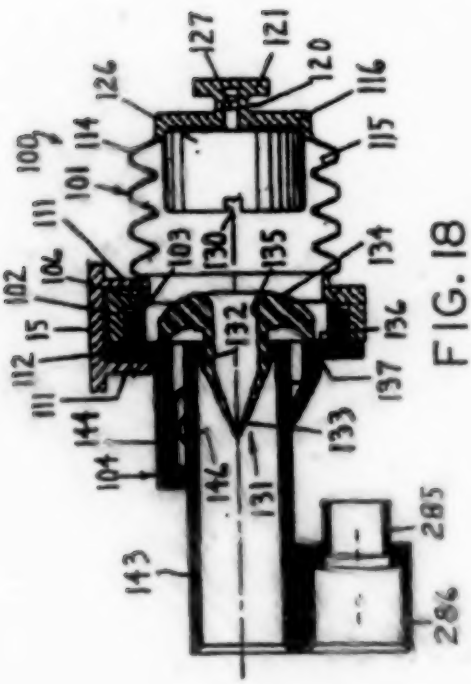


FIG. 18

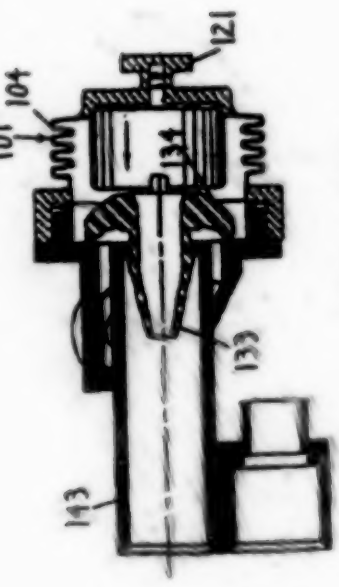


FIG. 18B

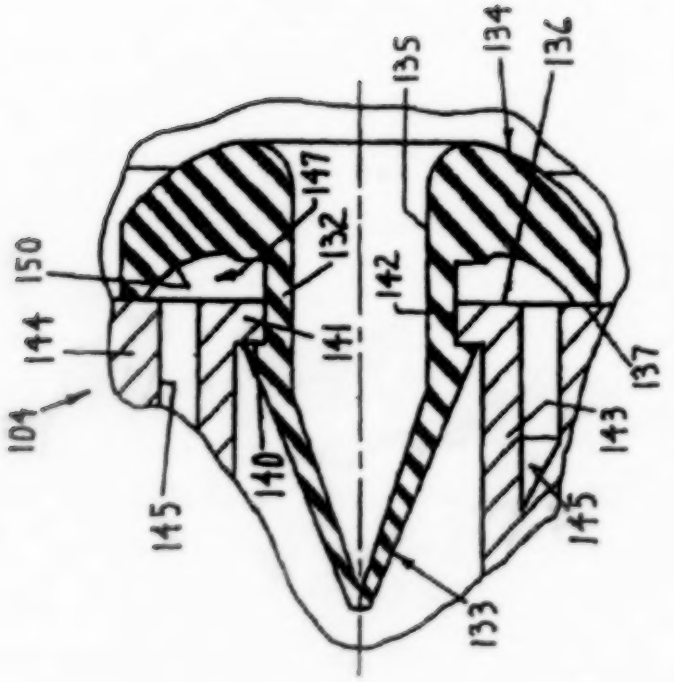


FIG. 18C

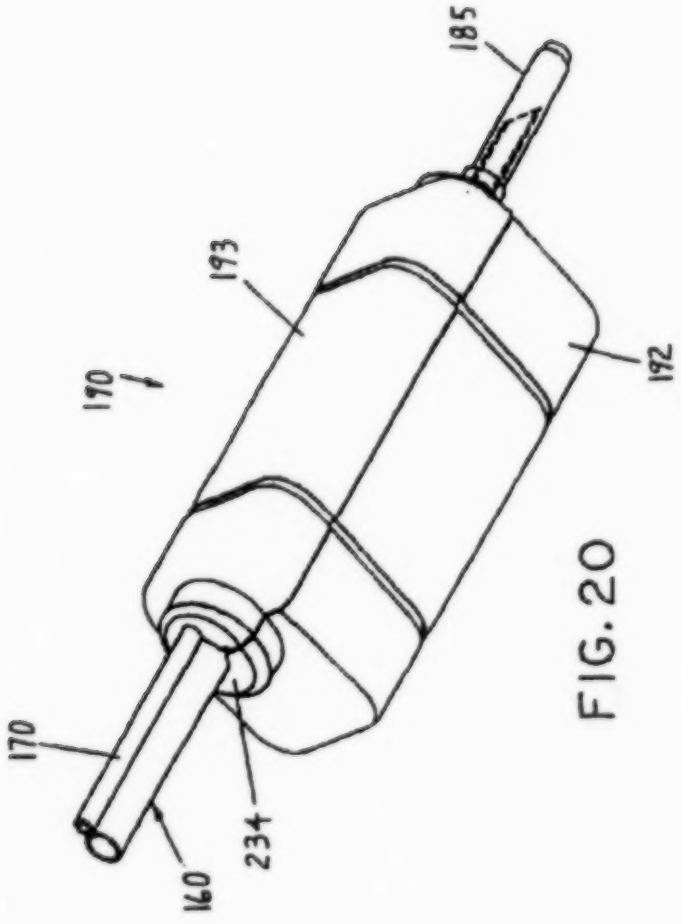


FIG. 20

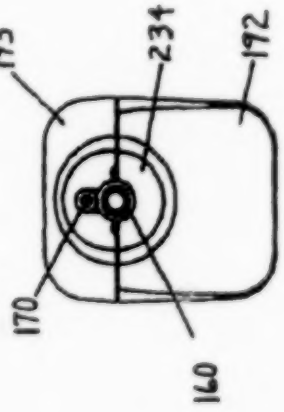


FIG. 21

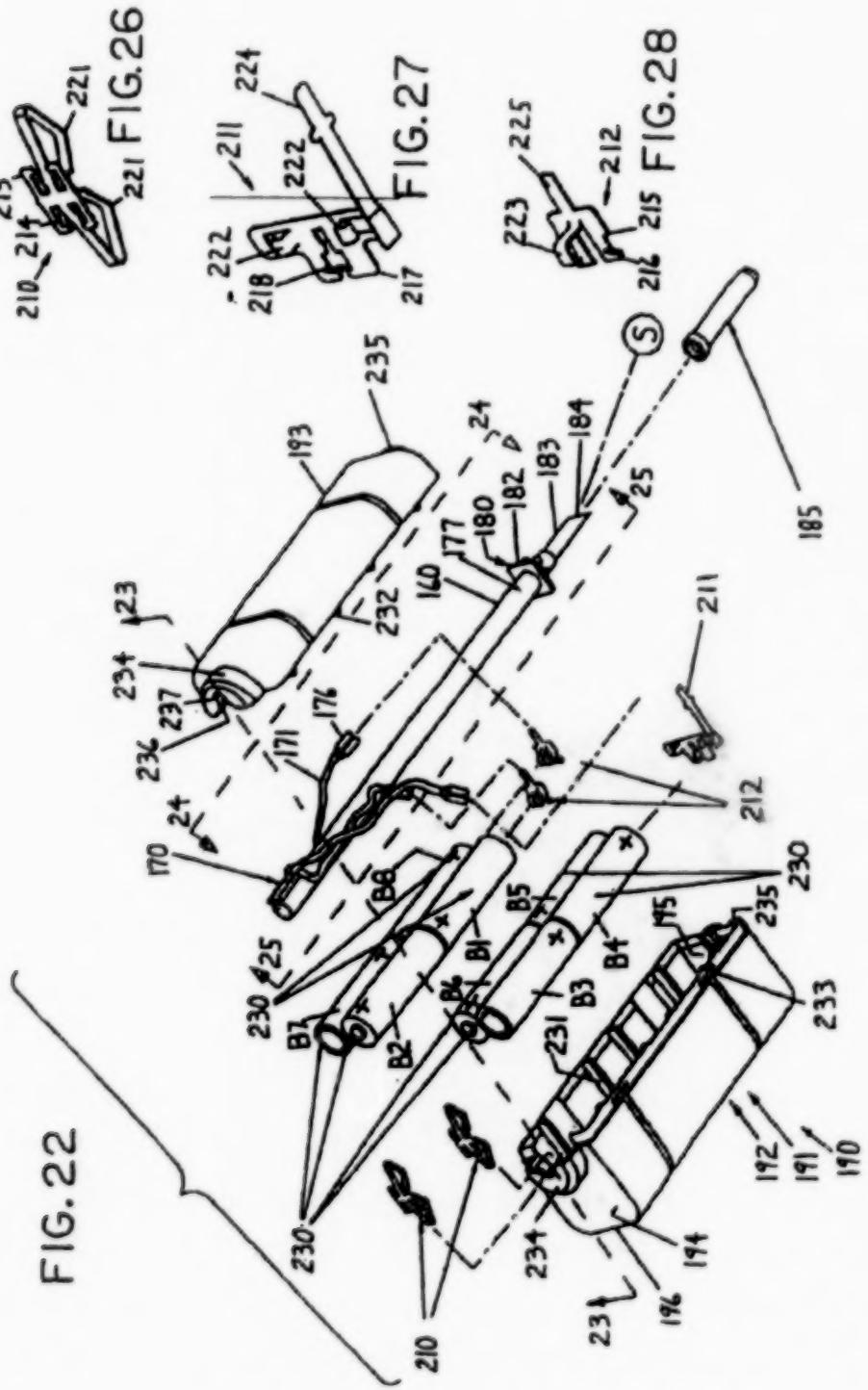


FIG. 26

FIG. 27

FIG. 28

FIG. 22

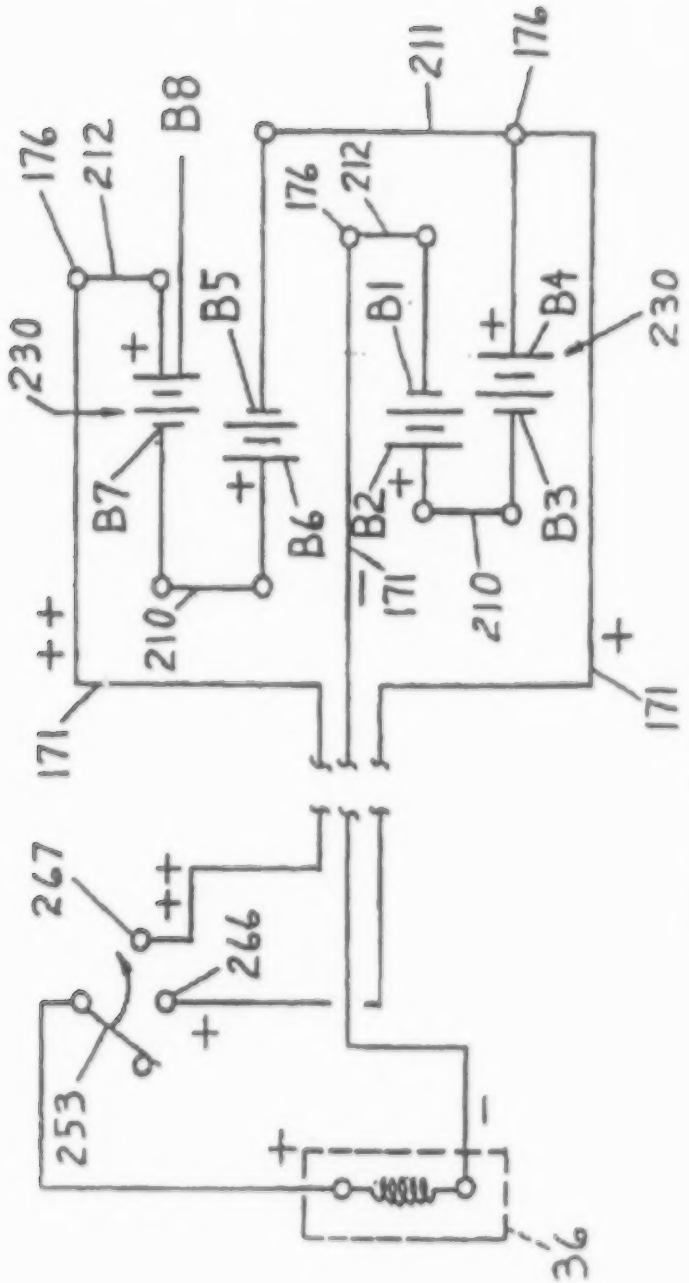
176
212
B8
230
B7
B5
B6
210
171
211
176
212
B1
B2
B3
B4
230
210
171
267
266
253
36

FIG. 22A

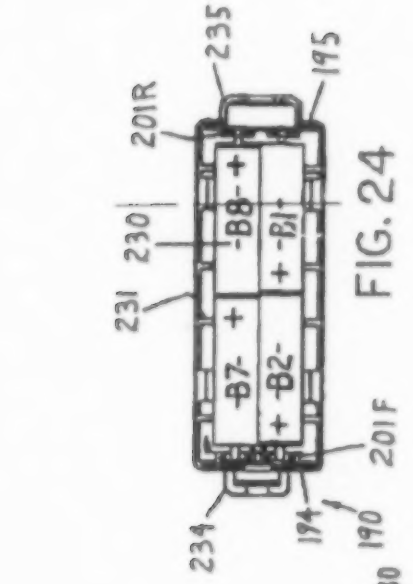


FIG. 24




FIG. 25

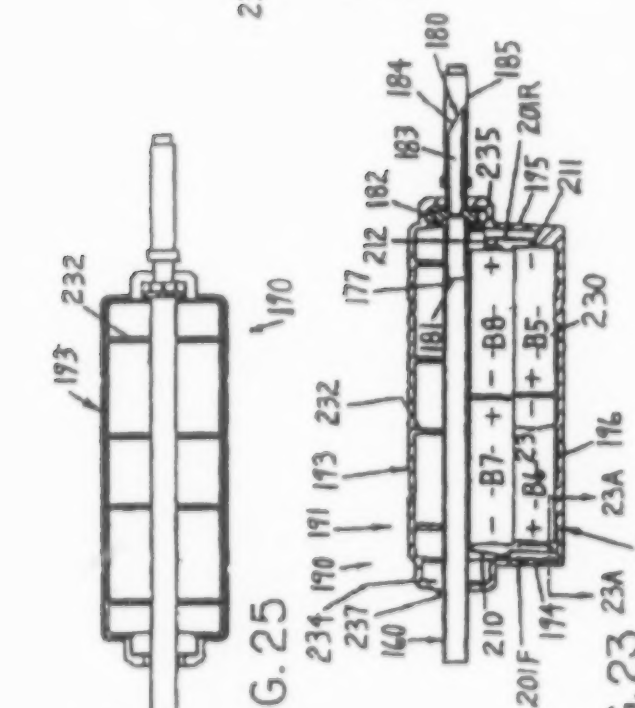


FIG. 23

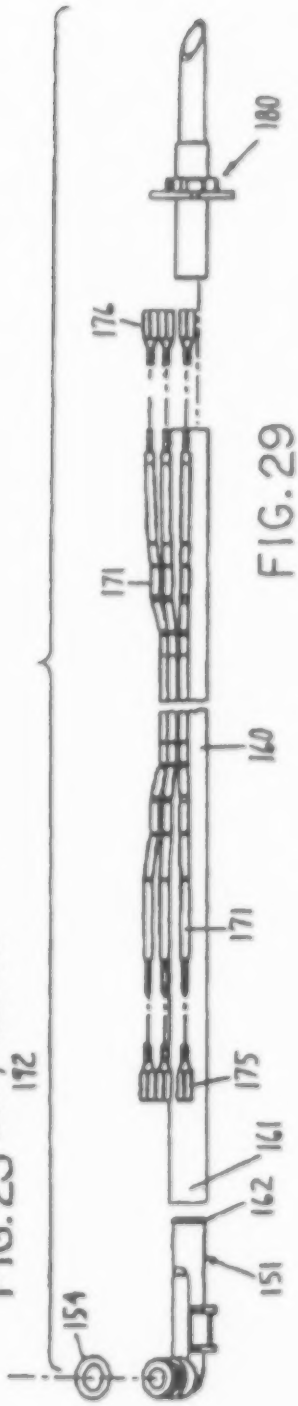


FIG. 29

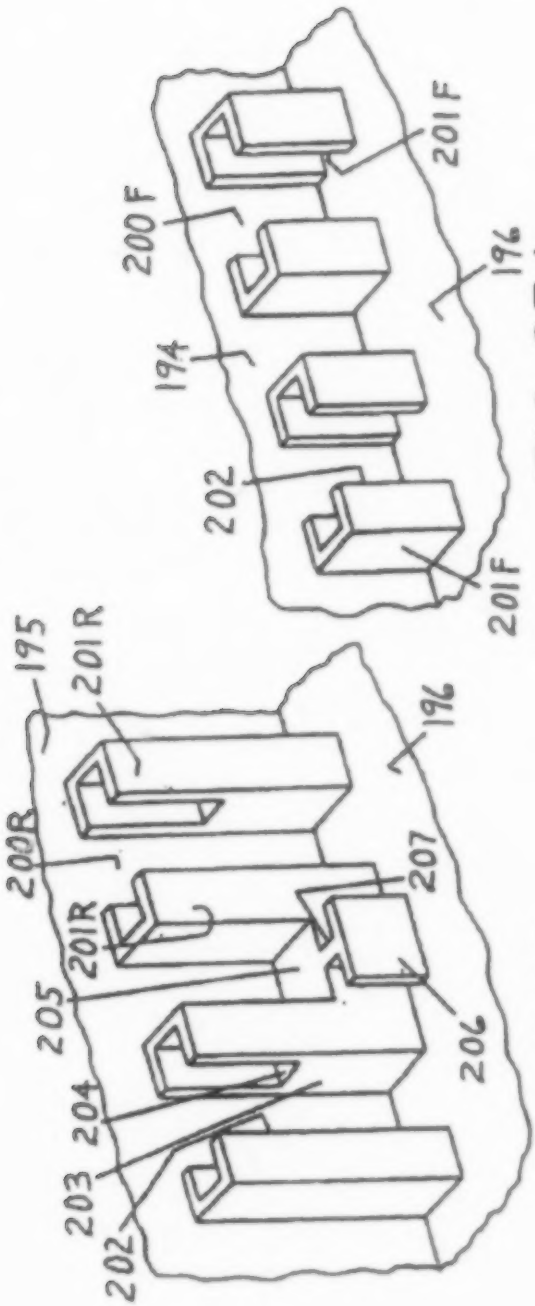


FIG. 23A

FIG. 23B

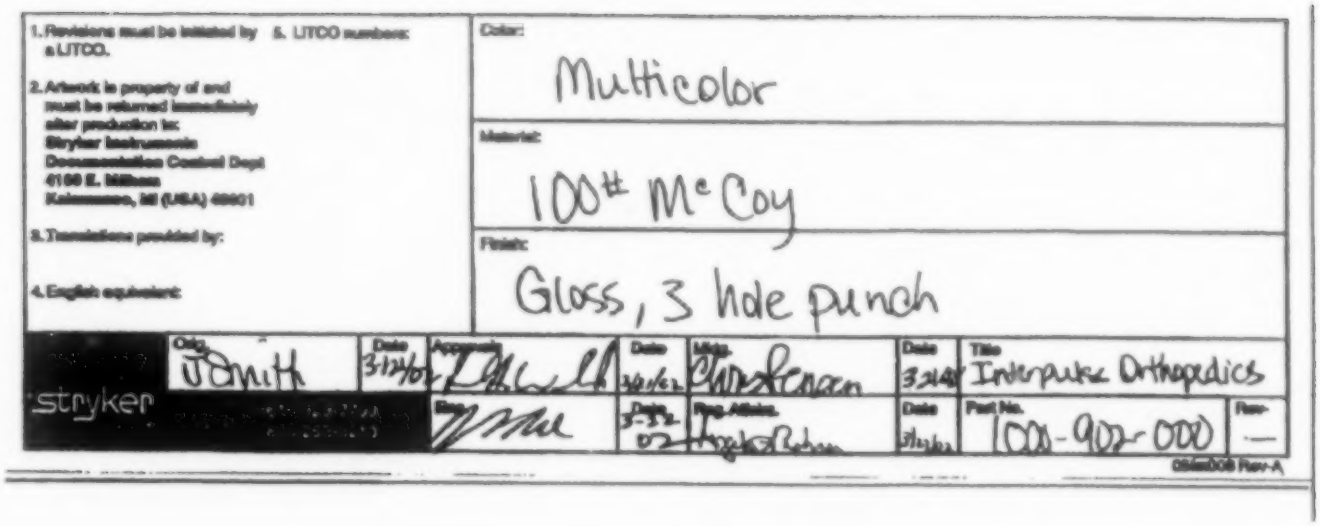



1. Revisions must be initiated by a LITCO.
2. Artwork is property of and must be returned immediately after production to: Stryker Instruments Documentation Control Dept 4100 E. Milham Kalamazoo, MI (USA) 49001
3. Translations provided by:
4. English equivalent:
5. LITCO numbers:

Color: Multicolor

Material: 100# McCoy

Finish: Gloss, 3 hole punch

| | | | | | | | |
|---|---|---|---|---|---|---|---|
| stryker | Orig. J Smith | Date 3-12-02 | Approvals [signature] | Date 3/21/02 | Mkts. [signature] | Date 3-21-02 | Title Interpulse Orthopedics |
| | | | Reg. [signature] | Date 3-22-02 | Reg. Affairs [signature] | Date 3/22/02 | Part No. 1000-902-000 Rev. — |

08/ex008 Rev-A

## Complete Ordering Information

# InterPulse Battery Powered Irrigation

### InterPulse Handpiece

| PART # | DESCRIPTION |
|---|---|
| 210-100 | Interpulse Handpiece with suction |
| 210-110 | Interpulse Handpiece with suction with Bone Cleaning Tip |
| 210-110-100 | Interpulse Handpiece with suction with Coaxial Bone Cleaning Tip |
| 210-112 | Interpulse Handpiece with suction with Soft Tissue Tip |
| 210-114 | Interpulse Handpiece with suction with High Flow Tip |
| 210-114-100 | Interpulse Handpiece with suction with Coaxial High Flow Tip |
| 210-118 | Interpulse Handpiece with suction with Fan Spray Tip |
| 210-118-100 | Interpulse Handpiece with suction with Coaxial Fan Spray Tip |
| 210-186 | Interpulse Handpiece with Dual Spike Adapter |
| 210-168 | Interpulse Handpiece with High Flow Tip with Dual Spike Adapter |
| 210-187 | Irrigation only Interpulse Handpiece with High Flow Tip with Dual Spike Adapter |
| 210-200 | Irrigation only Interpulse Handpiece |
| 210-210 | Irrigation only Interpulse Handpiece with Bone Cleaning Tip |
| 210-212 | Irrigation only Interpulse Handpiece with Soft Tissue Tip |
| 210-214 | Irrigation only Interpulse Handpiece with High Flow Tip |
| 210-218 | Irrigation only Interpulse Handpiece with Fan Spray Tip |

### Tips and Accessories

| PART # | DESCRIPTION |
|---|---|
| 210-1 | Wound Tunneling Tip with Suction |
| 210-3 | Wound Tunneling Tip |
| 210-4 | Femoral Canal Brush |
| 210-6 | Femoral Canal Tip (Irrigation Only) |
| 210-7 | Coaxial Femoral Canal Tip |
| 210-8 | Femoral Canal Tip |
| 210-10 | Bone Cleaning Tip |
| 210-10-100 | Coaxial Bone Cleaning Tip |
| 210-12 | Soft Tissue Tip |
| 210-14 | High Flow Tip |
| 210-14-100 | Coaxial High Flow Tip |
| 210-16 | Irrigation Only Short Tip |
| 210-17 | Pulsavac Tip |
| 210-18 | Fan Spray (Low Splash) Tip |
| 210-18-100 | Coaxial Fan Spray Tip |
| 210-34 | Medium Soft Cone Splash Shield |
| 210-312 | Soft Tissue Tip with Replacement Suction Tubing |
| 210-318 | Fan Spray Tip with Replacement Suction Tubing |
| 211-22 | Interpulse Rechargeable Power Pack |
| 211-24 | Interpulse Bay Charger |
| 211-100 | Interpulse Rechargeable Hand Piece |

### InterPulse Handpiece, Rechargeable

| PART # | DESCRIPTION |
|---|---|
| 211-100 | Interpulse Rechargeable Handpiece |
| 211-110 | Interpulse Rechargeable Handpiece with Bone Cleaning Tip |
| 211-112 | Interpulse Rechargeable Handpiece with Soft Tissue Tip |
| 211-114 | Interpulse Rechargeable Handpiece with High Flow Tip |
| 211-118 | Interpulse Rechargeable Handpiece with Fan Spray Tip |
| 211-200 | Interpulse Rechargeable Irrigation Only Handpiece |
| 211-210 | Interpulse Rechargeable Irrigation Only Handpiece with Bone Cleaning Tip |
| 211-212 | Interpulse Rechargeable Irrigation Only Handpiece with Soft Tissue Tip |
| 211-214 | Interpulse Rechargeable Irrigation Only Handpiece with High Flow Tip |
| 211-218 | Interpulse Rechargeable Irrigation Only Handpiece with Fan Spray Tip |

* Dr. Berghoff and Dr. Harris at St. Joseph's Medical Center in Fort Wayne, IN perform a total hip while using the Interpulse.

stryker INSTRUMENTS

For more information, contact your local Stryker Sales Representative.

4100 East Milham Ave
Kalamazoo, MI 49001
(800)253-3210
(616)323-7700

1000-902-000 Rev. None

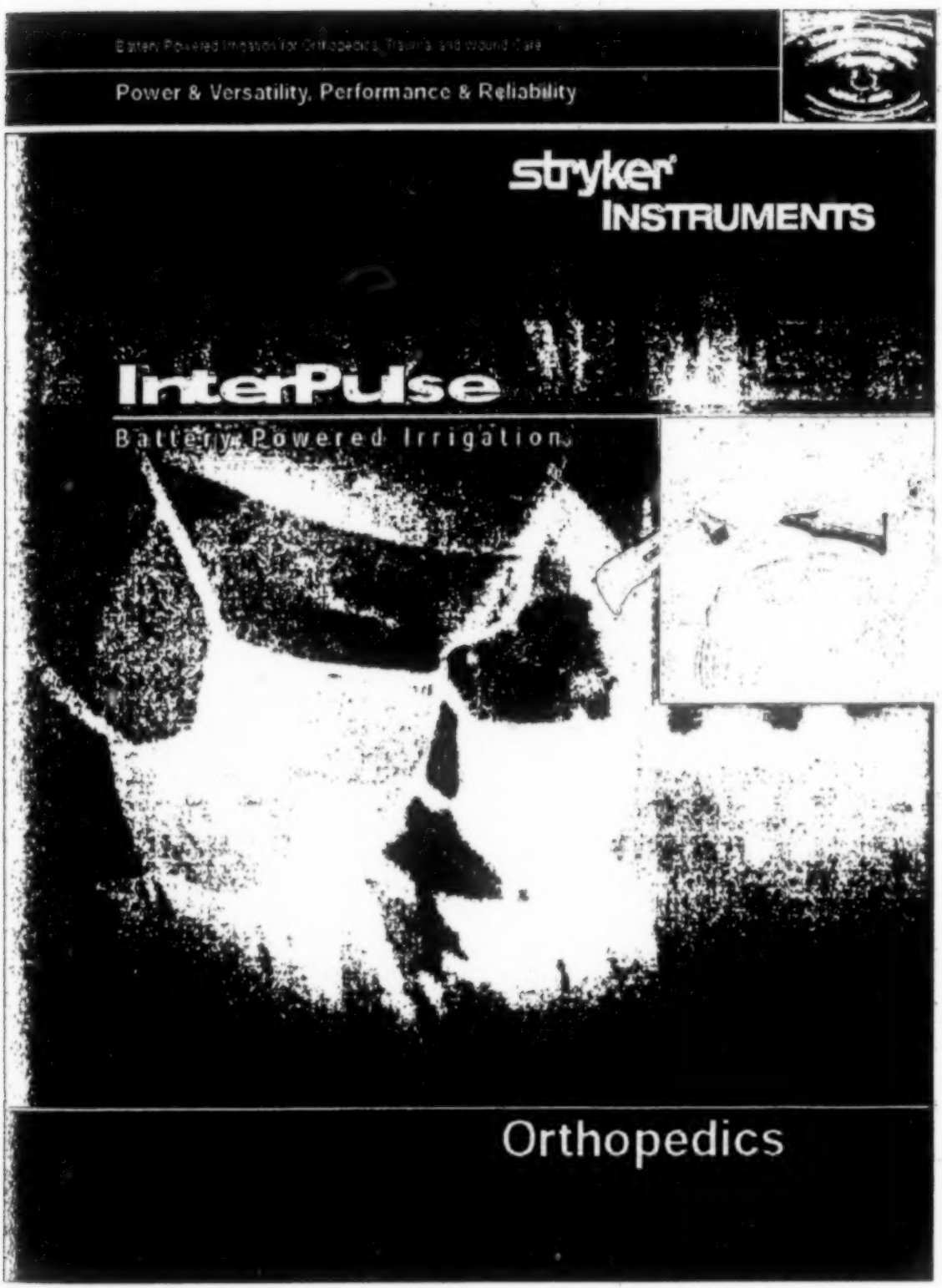
Power & Versatility, Performance & Reliability
stryker
INSTRUMENTS
InterPulse
Battery Powered Irrigation
Orthopedics

## Performance, Reliability, Versatility

Use interpulse to prepare the wound bed to heal the wound more quickly

### Features/Benefits

- Ergonomic shape to reduce muscle fatigue
- FDA approved PSI <15
- Single patient use
- Portable
- Cost effective

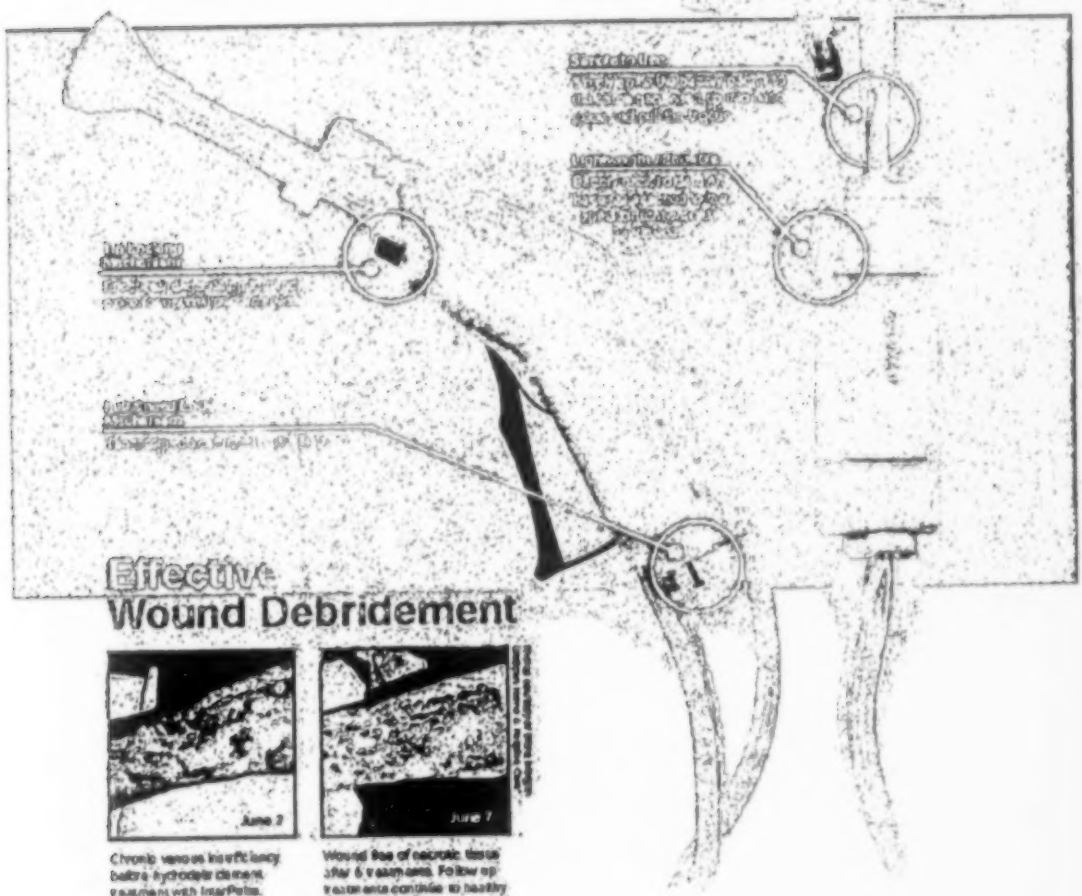

## Effective Wound Debridement




Chronic venous insufficiency before hydrogel dement treatment with InterPulse.




Wound free of necrotic tissue after 6 treatments. Follow up treatments promote healthy granulating wound.

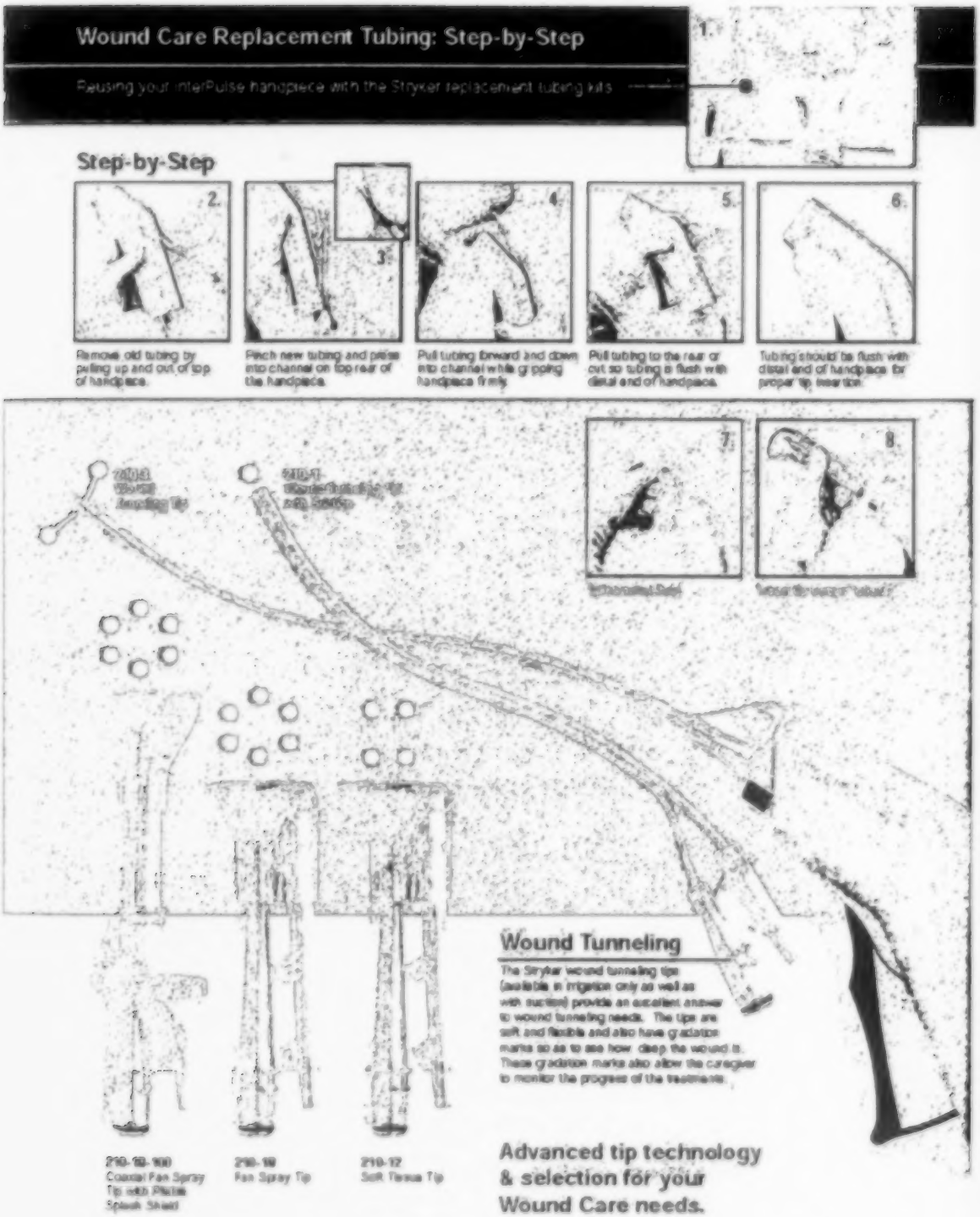
Wound Care Replacement Tubing: Step-by-Step
Reusing your InterPulse handpiece with the Stryker replacement tubing kits
Step-by-Step
1.
2.
3.
4.
5.
6.
Remove old tubing by pulling up and out of top of handpiece.
Pinch new tubing and press into channel on top rear of the handpiece.
Pull tubing forward and down into channel while gripping handpiece firmly.
Pull tubing to the rear or cut so tubing is flush with distal end of handpiece.
Tubing should be flush with distal end of handpiece for proper tip insertion.
7.
8.
Wound Tunneling
The Stryker wound tunneling tips (available in irrigation only as well as with suction) provide an excellent answer to wound tunneling needs. The tips are soft and flexible and also have gradation marks so as to see how deep the wound is. These gradation marks also allow the caregiver to monitor the progress of the treatments.
210-19
Fan Spray Tip
210-12
Soft Tissue Tip
Advanced tip technology & selection for your Wound Care needs.

Prior to hydrodebridement using SurgiLav® Plus.

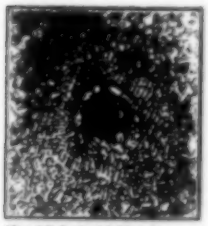

After daily hydrodebridement using SurgiLav® Plus. (duration: 28 treatments)

## Consider a safe, simple, and cost effective alternative. .

**SURGILAV® PLUS** Wound Management System

### Safety and Efficacy

"Our studies have measured the impact pressures generated by the various SurgiLav® Plus tips to range from 6.1 to 13.1 psi. These pressures are well within the recommended safety standard of 15 psi for soft tissue wounds. Our clinical experience suggests that SurgiLav® Plus may offer an effective and convenient means of cleansing chronic wounds."

### Simplicity

Portable battery powered handpiece

- Wound cleansing can take place virtually anywhere
- Eliminates task of ambulating patient.

Minimal set up required

- Spike bag
- Attach tip
- Pull trigger

Dual speed settings

Offers suction and irrigation in one simple-to-use package

### Cost Effectiveness

- Space saving packaging
- Fully disposable
- Saves time over conventional therapies
- A variety of cost saving kits available

For more information, please contact your local Stryker Sales Representative.

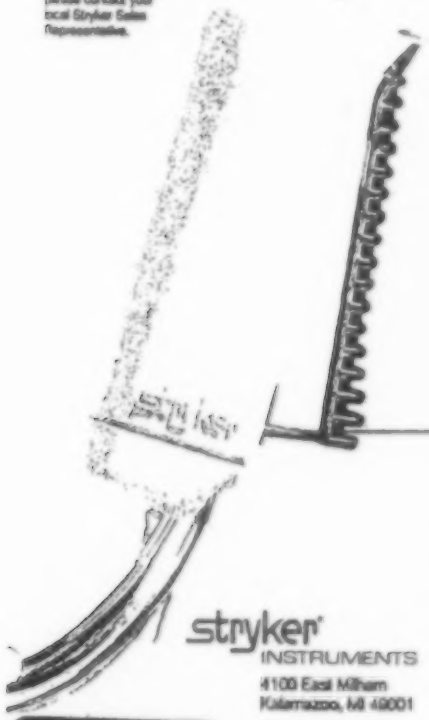

### Choice

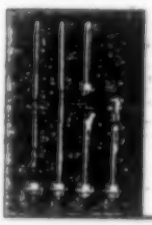

**207-65/66 Fan Spray Tip**

psi: low = 10.5, high = 11.2
Flow rate: (ml/min) low = 500, high = 750

**207-69/81 High Flow Trauma Tip**

psi: low = 6.1, high = 13.1
Flow rate: (ml/min) low = 900, high = 1000

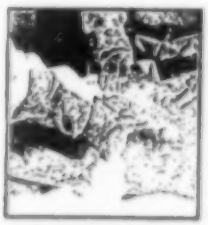

When you buy from Stryker, you have chosen to provide the best for your patients and your business.

1,2-dependent testing performed by Dr. George E. Fodstad-ower at the University of Virginia Medical Center "Re-evaluation of the Safety of Stryker Instruments' Surgilav Pro' Irrigation System," May 14, 1993

PLAINTIFF'S EXHIBIT 26

stryker® INSTRUMENTS
4100 East Milham
Kalamazoo, MI 49001

Customer Service
1-800-253-3210
FAX 1-800-999-3811

| | 1994 | 1995 | 1996 | 1997 |
|---|---|---|---|---|
| **Capital Equipment** | | | | |
| Zimmer | $15.63 | $15.92 | $19.75 | $17.96 |
| % Growth | | 1.82% | 19.39% | -9.97% |
| Stryker | $18.47 | $19.83 | $21.21 | $20.18 |
| % Growth | | 6.86% | 6.51% | -5.10% |
| Davol | N/A | N/A | N/A | N/A |
| % Growth | | | | |
| **Disposables** | | | | |
| Zimmer | N/A | N/A | $37.77 | $35.07 |
| % Growth | | | | -7.70% |
| Stryker | $26.08 | $27.26 | $26.27 | $24.83 |
| % Growth | | 4.33% | -3.77% | -5.80% |
| Davol | $21.18 | $22.78 | $34.35 | $27.11 |
| % Growth | | 7.02% | 33.68% | -26.71% |

## Product Release Inventory Requirements:

| No. Of Sets | Dollar Value | Time Required |
|---|---|---|
| 600 (sale units) | 96000 | 7 weeks |

## Sales Forecast

| | | | Year 1 | Year 2 | Year 3 | Year 4 | Year 5 |
|---|---|---|---|---|---|---|---|
| New Product | | | | | | | |
| *PulsaJet* | Units | | 173,800 | 300,379 | 378,173 | 467,263 | 566,587 |
| | Dollars | | $ 5,214,000 | $ 7,773,809 | $ 9,824,935 | $12,130,147 | $14,725,440 |
| | A.S.P. | | $ 30.00 | $ 25.88 | $ 25.98 | $ 25.96 | $ 25.99 |
| Existing Product | | | | | | | |
| *Pulsavac* | Units | | 843,301 | 783,903 | 728,211 | 675,170 | 627,732 |
| | Dollars | | $12,700,617 | $12,509,328 | $12,322,298 | $12,137,523 | $11,955,001 |
| | A.S.P. | | $ 15.06 | $ 15.96 | $ 16.92 | $ 17.97 | $ 19.04 |
| * *Var-A-Pulse* | Units | | 36,800 | 36,800 | 35,800 | 35,800 | 34,800 |
| | Dollars | | $ 1,290,576 | $ 1,290,576 | $ 1,255,506 | $ 1,255,506 | $ 1,220,436 |
| | A.S.P. | | $ 35.07 | $ 35.07 | $ 35.07 | $ 35.07 | $ 35.07 |
| Incremental | | | | | | | |
| *PulsaJet* | Units | | 137,000 | 263,579 | 342,373 | 431,463 | 531,781 |
| | Dollars | | $ 3,923,424 | $ 6,483,233 | $ 8,569,429 | $10,874,641 | $13,505,004 |

* The hypothetical forecast for Var-A-Pulse is supplied for reference only. This product will be discontinued upon release of the Pulsajet.

**Manufacturing Build Plan:**

| | Year 1 | Year 2 | Year 3 | Year 4 | Year 5 |
|---|---|---|---|---|---|
| **New Product** | | | | | |
| *PulsaJet* | 173800 | 300379 | 378173 | 467263 | 566587 |
| | | | | | |
| **Existing Product** | | | | | |
| *Pulsavac* | 843301 | 783903 | 728211 | 675170 | 627732 |
| *Var-A-Pulse* | 0 | 0 | 0 | 0 | 0 |

## Standard Cost Estimates

*High*

| | Year 1 | Year 2 | Year 3 | Year 4 | Year 5 |
|---|---|---|---|---|---|
| New Products | | | | | |
| *PulseJet* | 18.00 | 17.10 | 17.61 | 18.14 | 18.69 |
| Existing Products | | | | | |
| *Var-A-Pulse* | 19.25 | 19.83 | 20.42 | 21.04 | 21.67 |
| Incremental | | | | | |
| | -1.25 | -2.73 | -2.81 | -2.90 | -2.98 |

*Medium*

| | Year 1 | Year 2 | Year 3 | Year 4 | Year 5 |
|---|---|---|---|---|---|
| New Products | | | | | |
| *PulseJet* | 16.00 | 16.00 | 16.32 | 16.65 | 16.97 |
| Existing Products | | | | | |
| *Var-A-Pulse* | 18.69 | 19.06 | 19.45 | 19.83 | 20.23 |
| Incremental | | | | | |
| | -2.69 | -3.06 | -3.13 | -3.18 | -3.26 |

*Low*

| | Year 1 | Year 2 | Year 3 | Year 4 | Year 5 |
|---|---|---|---|---|---|
| New Products | | | | | |
| *PulseJet* | 15.00 | 15.00 | 15.15 | 15.30 | 15.45 |
| Existing Products | | | | | |
| *Var-A-Pulse* | 18.00 | 18.18 | 18.36 | 18.55 | 18.73 |
| Incremental | | | | | |
| | -3.00 | -3.18 | -3.21 | -3.25 | -3.28 |

mmer

# Orthopedic Implant Division

## PulsaJet Battery System

| | Year 0 | Year 1 | Year 2 | Year 3 | Year 4 | Year 5 |
|---|---|---|---|---|---|---|
| Units | | | | - | | - |
| Existing | | 36,800 | 36,800 | 35,800 | 35,800 | 34,800 |
| New | | 133,800 | 300,379 | 378,173 | 467,263 | 566,587 |
| Incremental | | 137,000 | 263,579 | 342,373 | 431,463 | 531,787 |
| Sales | | | | | | |
| Existing | | $ 1,290,576 | $ 1,290,576 | $ 1,253,506 | $ 1,255,506 | $ 1,220,436 |
| New | | $ 5,214,000 | $ 7,773,999 | $ 9,824,935 | $ 12,130,147 | $ 14,723,440 |
| Incremental | | $ 3,923,424 | $ 6,483,233 | $ 8,569,429 | $ 10,874,641 | $ 13,503,004 |
| Cost of Goods Sold | | | | | | |
| Incremental | | $ 2,192,000 | $ 4,217,264 | $ 5,477,968 | $ 6,903,408 | $ 8,508,592 |
| Cost of Goods Sold | $ - | $ 2,192,000 | $ 4,217,264 | $ 5,477,968 | $ 6,903,408 | $ 8,508,592 |
| Gross Profit | $ - | $ 1,731,424 | $ 2,265,969 | $ 3,091,461 | $ 3,971,233 | $ 4,994,412 |
| Program Expense Budget | | | | | | |
| Travel | (8,000) | $ (9,500) | | | | |
| Engineering | (150,800) | $ (40,280) | $ - | $ - | $ - | $ - |
| Clinical and other R&D Costs | (46,000) | (1,800) | | | - | - |
| | $ (204,800) | $ (50,780) | $ - | $ - | $ - | $ - |
| Royalties | | $ - | $ - | $ - | $ - | $ - |
| Commissions | | $ 306,122 | $ 836,337 | $ 1,103,456 | $ 1,402,829 | $ 1,762,146 |
| Promotions | | | | | | |
| Advertising | | $ 24,000 | $ - | $ - | $ - | $ - |
| Promotion | | 208,000 | 82,000 | 57,000 | 57,000 | 57,000 |
| Training | | 10,000 | 3,000 | 3,000 | 3,000 | 3,000 |
| Other (Durotrom) | | 2,000 | - | - | - | - |
| Total Advertising and Promotion | | $ 244,000 | $ 85,000 | $ 60,000 | $ 60,000 | $ 60,000 |
| Total Costs | $ (204,800) | $ 499,342 | $ 921,337 | $ 1,163,456 | $ 1,462,829 | $ 1,822,146 |
| Net Revenue | $ (204,800) | $ 1,032,082 | $ 1,344,632 | $ 1,928,005 | $ 2,508,404 | $ 3,194,266 |
| Total Cash Flows After Discounting at 12% | $5,863,457 | | | | | |
| Return on Sales | | 26.3% | 20.7% | 22.5% | 23.1% | 23.7% |
| Capital Requirements | | | | | | |
| Tooling | 303,500 | | | | | |

## Return on Investment and Payback Calculation
## ($ 000's Omitted)

| GROUP/DIVISION<br>Orthopaedic Implant | LOCATION | DATE<br>10-Mar-98 | RETURN ON INVESTMENT<br>157.22% |
|---|---|---|---|
| PROJECT TITLE<br>Pulsajet Battery System | | | PAYBACK PERIOD<br>0.7 YEARS |

| (1) | (2) | (3) | (4) | (5) | (6) | (7) | (8) | (9) | (10) | (11) | (12) | (13) | (14) |
|---|---|---|---|---|---|---|---|---|---|---|---|---|---|
| | | | | | Net Income or Savings | | | | | | | | |
| Calendar Year | Time Frame | Total Investment | Dir. Earnings Before Depr., COM, & Inc. Taxes | Depreciation | Before Depr. & I.T. (Col. 4-5) | After Depr. & I.T. (Col. 6 x 62%) | Reinv. & Recovery of Assets | Total Cash Return (Col. 5+7+8) | Net Cash Flow (Col. 9-3) | Discount Factor @ 157.22% | Discount Cash Flow Column (Col. 10x11) | Discount Factor @ - | Discount Cash Flow Column (Col. 10x13) |
| | -3 | | | | | | | | | | | | |
| | -2 | | | | | | | | | | | | |
| | -1 | | | | | | | | | | | | |
| 1998 | Ref. Pt. | $508.3 | - | - | - | - | | - | ($508.3) | 1.0000 | ($508.30) | 1.0000 | |
| 1998 | 1 | 50.8 | 1,082.9 | 88.7 | 994.2 | 617.8 | | 704.3 | 653.5 | 0.3888 | 254.08 | | |
| 2000 | 2 | | 1,344.8 | 81.9 | 1,262.7 | 795.3 | | 857.2 | 857.2 | 0.1511 | 129.52 | | |
| 2001 | 3 | | 1,926.0 | 44.2 | 1,881.8 | 1,166.7 | | 1,210.9 | 1,210.9 | 0.0588 | 71.20 | | |
| 2002 | 4 | | 2,506.4 | 31.6 | 2,476.8 | 1,535.6 | | 1,567.2 | 1,567.2 | 0.0228 | 35.73 | | |
| 2003 | 5 | | 3,194.3 | 26.3 | 3,168.0 | 1,964.2 | | 1,990.5 | 1,990.5 | 0.0089 | 17.72 | | |
| 2004 | 6 | | - | 26.3 | (26.3) | (16.3) | | 10.0 | 10.0 | 0.0035 | 0.04 | | |
| 2005 | 7 | | - | 26.3 | (26.3) | (16.3) | | 10.0 | 10.0 | 0.0013 | 0.01 | | |
| 2006 | 8 | | - | | - | - | | - | - | 0.0005 | - | | |
| 2007 | 9 | | - | | - | - | | - | - | 0.0002 | - | | |
| 2008 | 10 | | - | | - | - | | - | - | 0.0001 | - | | |
| N/A | Total | $559.1 | $10,056.2 | $303.3 | $9,752.9 | $6,048.8 | - | $6,350.1 | $5,791.0 | N/A | - | N/A | - |

# Zimmer
## Orthopedic Implant Division
## PulsaJet Battery System

| | Year 0 | Year 1 | Year 2 | Year 3 | Year 4 | Year 5 |
|---|---|---|---|---|---|---|
| Units | | | | - | | - |
| Existing | | 36,800 | 36,800 | 35,800 | 35,800 | 34,800 |
| New | | 173,800 | 308,379 | 378,173 | 467,263 | 566,587 |
| Incremental | | 137,000 | 263,579 | 342,373 | 431,463 | 531,787 |
| Sales | | | | | | |
| Existing | | $ 1,290,576 | $ 1,290,576 | $ 1,255,506 | $ 1,255,506 | $ 1,220,436 |
| New | | $ 5,214,000 | $ 7,773,809 | $ 9,824,925 | $ 12,130,147 | $ 14,725,440 |
| Incremental | | $ 3,923,424 | $ 6,483,233 | $ 8,569,429 | $ 10,874,641 | $ 13,505,004 |
| Cost of Goods Sold | | | | | | |
| Incremental | | $ 2,192,000 | $ 4,217,264 | $ 5,477,968 | $ 6,903,408 | $ 8,508,592 |
| Cost of Goods Sold | $ - | $ 2,192,000 | $ 4,217,264 | $ 5,477,968 | $ 6,903,408 | $ 8,508,592 |
| Gross Profit | $ - | $ 1,731,424 | $ 2,265,969 | $ 3,091,461 | $ 3,971,233 | $ 4,996,412 |
| Program Expense Budget | | | | | | |
| Travel | (12,000) | $ (15,000) | | | | |
| Engineering | (198,375) | $ (108,680) | $ - | $ - | $ - | $ - |
| Clinical and other R&D Costs | (72,500) | (7,000) | | | - | - |
| | $ (283,075) | $ (130,680) | $ - | $ - | $ - | $ - |
| Royalties | | $ - | $ - | $ - | $ - | $ - |
| Commissions | | $ 506,122 | $ 836,337 | $ 1,105,456 | $ 1,402,829 | $ 1,742,146 |
| Promotions | | | | | | |
| Advertising | | $ 24,000 | $ - | $ - | $ - | $ - |
| Promotion | | 208,000 | 82,000 | 57,000 | 57,000 | 57,000 |
| Training | | 16,000 | 3,000 | 3,000 | 3,000 | 3,000 |
| Other (Durations) | | 2,000 | - | - | - | - |
| Total Advertising and Promotion | | $ 244,000 | $ 85,000 | $ 60,000 | $ 60,000 | $ 60,000 |
| Total Costs | $ (283,075) | $ 619,442 | $ 921,337 | $ 1,165,456 | $ 1,462,829 | $ 1,802,146 |
| Net Revenue | $ (283,075) | $ 1,111,982 | $ 1,344,632 | $ 1,926,005 | $ 2,508,404 | $ 3,194,266 |
| Total Cash Flows After Discounting at 12% | $8,856,466 | | | | | |
| Return on Sales | | 28.3% | 20.7% | 22.5% | 23.1% | 22.7% |
| Capital Requirements | | | | | | |
| Tooling | 482,500 | | | | | |

## Return on Investment and Payback Calculation
## ($ 000's Omitted)

| GROUP/DIVISION | LOCATION | DATE | RETURN ON INVESTMENT |
|---|---|---|---|
| Orthopaedic Implant | | 10-Mar-98 | 113.00% |
| **PROJECT TITLE** | | | **PAYBACK PERIOD** |
| Pulsajet Battery System | | | 0.9 YEARS |

| (1) | (2) | (3) | (4) | (5) | (6) | (7) | (8) | (9) | (10) | (11) | (12) | (13) | (14) |
|---|---|---|---|---|---|---|---|---|---|---|---|---|---|
| | | | | | Net Income or Savings | | | | | | | | |
| Calendar Year | Time Frame | Total Investment | Otr. Earnings Before Depr., COM, & Inc. Taxes | Depreciation | Before Depr. & I.T. (Col. 4-5) | After Depr. & I.T. (Col. 6 x 62%) | Reinv. & Recovery of Assets | Total Cash Return (Col. 5+7+8) | Net Cash Flow (Col. 9-3) | Discount Factor @ 113.00% | Discount Cash Flow Column (Col. 10x11) | Discount Factor @ - | Discount Cash Flow Column (Col. 10x13) |
| | -3 | | | | | | | | | | | | |
| | -2 | | | | | | | | | | | | |
| | -1 | | | | | | | | | | | | |
| 1998 | Ref. Pt. | $765.6 | - | - | - | - | | - | ($765.6) | 1.0000 | ($765.60) | 1.0000 | |
| 1999 | 1 | 130.7 | 1,242.7 | 137.9 | 1,104.8 | 685.0 | | 822.9 | 692.2 | 0.4695 | 324.99 | | |
| 2000 | 2 | | 1,344.8 | 98.8 | 1,246.1 | 772.6 | | 871.1 | 871.1 | 0.2204 | 191.99 | | |
| 2001 | 3 | | 1,926.0 | 70.3 | 1,855.7 | 1,150.5 | | 1,220.8 | 1,220.8 | 0.1035 | 126.35 | | |
| 2002 | 4 | | 2,508.4 | 50.2 | 2,458.2 | 1,524.1 | | 1,574.3 | 1,574.3 | 0.0486 | 76.51 | | |
| 2003 | 5 | | 3,194.3 | 41.9 | 3,152.4 | 1,954.5 | | 1,996.4 | 1,996.4 | 0.0228 | 45.52 | | |
| 2004 | 6 | | - | 41.9 | (41.9) | (26.0) | | 15.9 | 15.9 | 0.0107 | 0.17 | | |
| 2005 | 7 | | - | 41.9 | (41.9) | (26.0) | | 15.9 | 15.9 | 0.0050 | 0.08 | | |
| 2006 | 8 | | - | | - | - | | - | - | 0.0024 | - | | |
| 2007 | 9 | | - | | - | - | | - | - | 0.0011 | - | | |
| 2008 | 10 | | - | | - | - | | - | - | 0.0005 | - | | |
| N/A | Total | $896.3 | $10,216.0 | $482.6 | $9,733.4 | $6,034.7 | - | $6,517.3 | $5,621.0 | N/A | $0.01 | N/A | |

*PulsaJet*
$16.00 Target Cost
Estimated "Best Case" DEVELOPMENT COSTS

| DESCRIPTION | 1998 J | F | M | A | M | J | J | A | S | O | N | D | TOTAL 1998 | 1999 J | F | M | A | M | J | J | A | S | O | N | D | TOTAL 1999 | TOTAL $16.00 Target |
|---|---|---|---|---|---|---|---|---|---|---|---|---|---|---|---|---|---|---|---|---|---|---|---|---|---|---|---|
| Program Manager - D8 | 0.0 | 0.0 | 0.0 | 0.0 | 0.0 | 0.0 | 0.7 | 0.6 | 0.5 | 0.6 | 0.6 | 1.0 | 7.7 | 0.8 | 0.3 | 0.3 | 0.2 | 0.2 | 0.1 | | | | | | | 1.9 | 9.6 |
| Manufacturing Engineer - D5 | 0.0 | 0.0 | 0.2 | 0.2 | 0.2 | 0.2 | 0.3 | 0.4 | 0.8 | 0.8 | 0.8 | 0.8 | 4.0 | 0.4 | 0.3 | 0.2 | 0.1 | 0.1 | | | | | | | | 1.1 | 5.1 |
| Drafting | 0.0 | 0.0 | 0.8 | 0.8 | 0.8 | 0.4 | 0.3 | 0.3 | 0.2 | 0.3 | 0.3 | 0.2 | 4.3 | 0.2 | 0.1 | 0.1 | | | | | | | | | | 0.4 | 4.7 |
| Technician | 0.0 | 0.0 | 0.0 | 0.0 | 0.0 | 0.5 | 0.5 | 0.5 | 0.5 | 0.7 | 0.8 | 1.0 | 7.2 | 1.0 | 0.5 | 0.3 | 0.1 | | | | | | | | | 1.9 | 9.1 |
| | (used $ 6,500/mo fir rate) | | | | | | | | | | | Sub-Total | $180,800 | | | | | | | | | | | | Sub-Total | $40,280 | $191,080 |
| Testing Costs | | | | | | | | | | | | | $300,000 | | | | | | | | | | | | | | 300,000.0 |
| Fixture Costs (x4g) | | | | | | | | | | | | | $3,500 | | | | | | | | | | | | | | 3,500.0 |
| Testing Costs (Toxicity / Biocompatibility) | | | | | | | | | | | | | $6,000 | | | | | | | | | | | | | $1,000 | 6,000.0 |
| Prototype Costs (Field Eval. / Validation) | | | | | | | | | | | | | $40,000 | | | | | | | | | | | | | | 40,000.0 |
| Travel Costs | | | | | | | | | | | | | $8,000 | | | | | | | | | | | | | $9,500 | $17,500 |
| Outside Design | | | | | | | | | | | | | $1,000 | | | | | | | | | | | | | | 1,000.0 |
| | | | | | | | | | | | | Sub-Total | $367,500 | | | | | | | | | | | | Sub-Total | $10,500 | $368,000 |
| TOTAL COSTS | | | | | | | | | | | | | $468,300 | | | | | | | | | | | | | $50,780 | $559,080 |
| Note: No cost estimate for support groups. | | | | | | | | | | | | | | | | | | | | | | | | | | | |

*PulsaJet*
**$16.00 Target Cost**
**Estimated "Worst Case" DEVELOPMENT COSTS**

| DESCRIPTION | 1998 J | F | M | A | M | J | J | A | S | O | N | D | TOTAL 1998 | 1999 J | F | M | A | M | J | J | A | S | O | N | D | TOTAL 1999 | TOTAL $16.00 |
|---|---|---|---|---|---|---|---|---|---|---|---|---|---|---|---|---|---|---|---|---|---|---|---|---|---|---|---|
| Program Manager - DB | 0.0 | 0.0 | 1.0 | 1.0 | 1.0 | 1.0 | 0.8 | 0.8 | 0.8 | 0.8 | 0.8 | 1.0 | 8.9 | 1.0 | 1.0 | 1.0 | 0.8 | 0.8 | 0.4 | 0.2 | 0.1 | 0.1 | | | | 5.2 | 14.1 |
| Manufacturing Engineer - DB | 0.0 | 0.0 | 0.5 | 0.5 | 0.5 | 0.8 | 0.8 | 0.8 | 0.8 | 0.7 | 0.8 | 1.0 | 8.3 | 1.0 | 0.8 | 1.0 | 0.8 | 0.3 | 0.3 | 0.2 | 0.1 | | | | | 4.3 | 10.6 |
| Drafting | 0.0 | 0.0 | 1.0 | 1.0 | 1.0 | 1.0 | 0.8 | 0.3 | 0.3 | 0.3 | 0.3 | 0.5 | 6.5 | 1.0 | 0.4 | 0.3 | 0.1 | | | | | | | | | 1.8 | 8.3 |
| Technician | 0.0 | 0.0 | 1.0 | 1.0 | 1.0 | 1.0 | 0.8 | 0.8 | 0.8 | 0.8 | 1.0 | 1.0 | 8.9 | 1.0 | 1.0 | 0.5 | 0.2 | 0.2 | 0.1 | | | | | | | 3.0 | 11.9 |
| | (used $ 6,500/mo lbr rate) | | | | | | | | | Sub-Total | | | $199,875 | | | | | | | | | | Sub-Total | | | $106,880 | $307,256 |
| Tooling Costs | | | | | | | | | | | | | $475,000 | | | | | | | | | | | | | | 475,000.0 |
| Fixture Costs (Mfg) | | | | | | | | | | | | | 67,500 | | | | | | | | | | | | | | 7,500.0 |
| Testing Costs (Toxicity / Biocompatibility) | | | | | | | | | | | | | $12,500 | | | | | | | | | | | | | | 12,500.0 |
| Prototype Costs (Field Eval. / Validation) | | | | | | | | | | | | | $45,000 | | | | | | | | | | | | | $7,000 | 52,000.0 |
| Travel Costs | | | | | | | | | | | | | $12,000 | | | | | | | | | | | | | $15,000 | $27,000 |
| Outside Design | | | | | | | | | | | | | $15,000 | | | | | | | | | | | | | | 15,000.0 |
| | | | | | | | | | | Sub-Total | | | $667,000 | | | | | | | | | | Sub-Total | | | $22,000 | $589,000 |
| **TOTAL COSTS** | | | | | | | | | | | | | **$766,875** | | | | | | | | | | | | | **$130,880** | **$896,256** |
| Note: No cost estimate for support groups | | | | | | | | | | | | | | | | | | | | | | | | | | | |

PulseJet
March 11, 1998

| ID | Task Name | Start | Finish |
|---|---|---|---|
| 1 | Feasibility | 11/3/97 | 4/6/98 |
| 2 | Marketing Brief | 11/3/97 | 11/7/97 |
| 3 | Review Competitive Product | 11/3/97 | 1/9/98 |
| 4 | Patent Review | 11/3/97 | 12/18/97 |
| 5 | Field Research | 11/3/97 | 12/19/97 |
| 6 | Business Case | 11/17/97 | 2/27/98 |
| 7 | Project Approval | 3/12/98 | 4/3/98 |
| 8 | Officially Begin Development | 4/6/98 | 4/6/98 |
| 9 | Development + Design | 4/6/98 | 8/30/98 |
| 10 | Design Piston | 4/6/98 | 4/24/98 |
| 11 | Prototype Bellows/Piston | 4/27/98 | 5/18/98 |
| 12 | Design Gear Train | 4/20/98 | 5/15/98 |
| 13 | Prototype Gear Train | 5/18/98 | 6/29/98 |
| 14 | Design Valving | 5/12/98 | 5/25/98 |
| 15 | Prototype Valving | 5/29/98 | 6/8/98 |
| 16 | Design Terminals | 5/25/98 | 6/12/98 |
| 17 | Prototype Terminals | 6/15/98 | 7/10/98 |
| 18 | Design Trigger | 6/23/98 | 7/3/98 |
| 19 | Prototype Trigger | 7/6/98 | 7/17/98 |
| 20 | Design Handpiece | 6/25/98 | 7/28/98 |
| 21 | Prototype Handpiece | 7/30/98 | 8/19/98 |
| 22 | Functional Unit | 8/19/98 | 8/19/98 |
| 23 | Outside Evaluation of Design | 8/20/98 | 9/3/98 |
| 24 | Design Tips | 8/20/98 | 9/16/98 |
| 25 | Prototype Tips | 9/17/98 | 9/30/98 |
| 26 | Packaging | 7/6/98 | 3/2/99 |
| 27 | Design Packaging | 7/6/98 | 8/14/98 |
| 28 | Prototype Packaging | 8/17/98 | 9/11/98 |
| 29 | Packaging Validation | 1/27/98 | 3/2/99 |
| 30 | Tooling | 6/29/98 | 1/19/99 |
| 31 | Bellows/Piston Tooling | 5/20/98 | 8/25/98 |
| 32 | Gear Molds | 6/1/98 | 9/4/98 |
| 33 | Valve Housing Molds | 6/9/98 | 9/14/98 |
| 34 | Trigger Molds | 7/20/98 | 10/23/98 |
| 35 | Terminal Tooling | 7/13/98 | 10/2/98 |

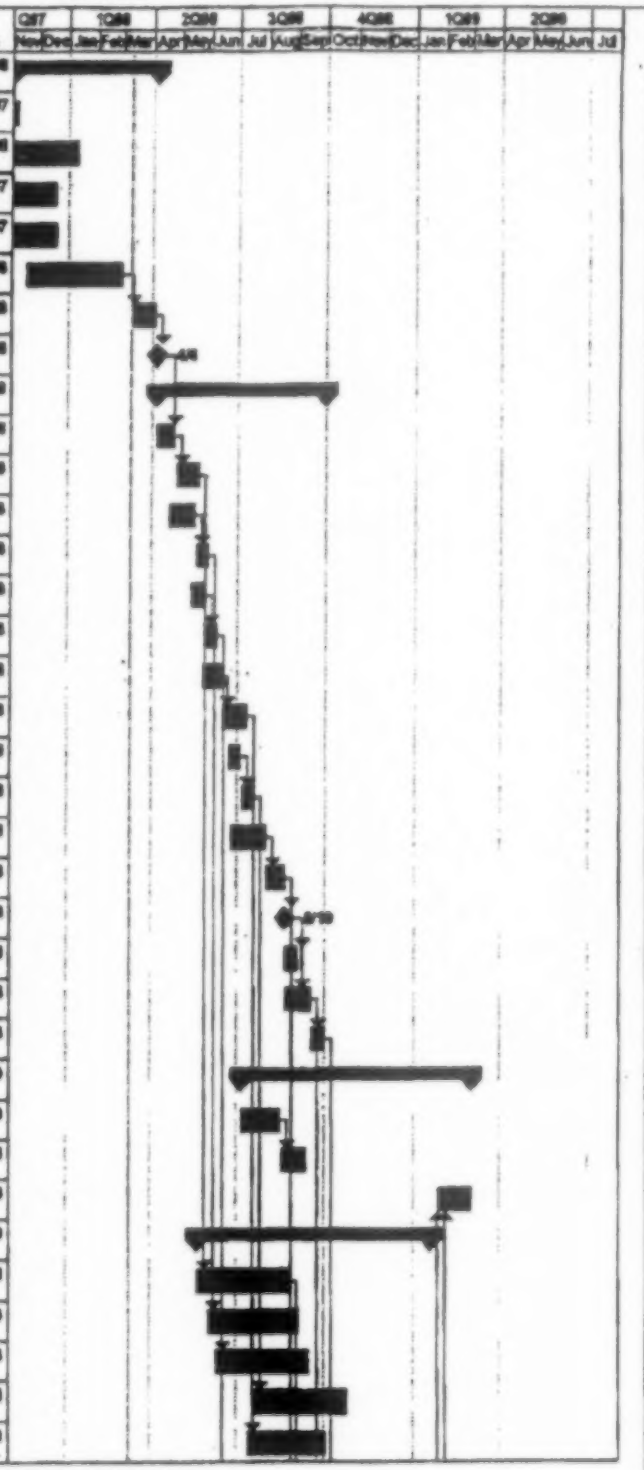


Project Manager: Tim Donaldson

PulsaJet
March 11, 1998

| ID | Task Name | Start | Finish |
|---|---|---|---|
| 3[illegible] | Handpiece Molds | 8/20/98 | 11/25/98 |
| 3[illegible] | Nozzle (Tip) Molds | 10/1/98 | 1/6/99 |
| 38 | Sample Molds | 8/26/98 | 1/19/99 |
| 39 | Production Quality Units | 1/19/98 | 1/19/99 |
| 40 | Sonic Welding Tooling | 9/9/98 | 8/17/98 |
| 41 | Tray Tooling | 9/17/98 | 11/25/98 |
| 42 | Pilot Run | 1/28/99 | 3/2/99 |
| 43 | Build Samples | 1/20/99 | 1/26/99 |
| 44 | Sterilize Samples | 1/27/99 | 2/16/99 |
| 45 | Test Samples | 2/17/99 | 3/2/99 |
| 46 | Design Validation | 10/1/98 | 4/7/99 |
| 47 | Materials Biocompatibility | 10/1/98 | 11/25/98 |
| 48 | Design Review | 3/3/99 | 3/3/99 |
| 49 | Field Evaluation | 3/4/99 | 4/7/99 |
| 50 | Documentation | 1/14/98 | 4/16/99 |
| 51 | 510(k) Analysis | 4/10/98 | 5/7/98 |
| 52 | Risk Analysis | 4/10/98 | 12/11/98 |
| 5[illegible] | Test Protocol | 12/10/98 | 1/6/99 |
| 54 | Field Evaluation Protocol | 1/14/98 | 2/10/98 |
| 55 | Design Outputs | 4/8/99 | 4/12/99 |
| 56 | Design Assurance Closure | 4/13/99 | 4/14/99 |
| 57 | Project Release Checklist | 4/15/99 | 4/16/99 |
| 58 | Production | 4/19/99 | 6/1/99 |
| 59 | Build Inventory | 4/19/99 | 6/1/99 |
| 60 | Release | 6/1/99 | 6/1/99 |

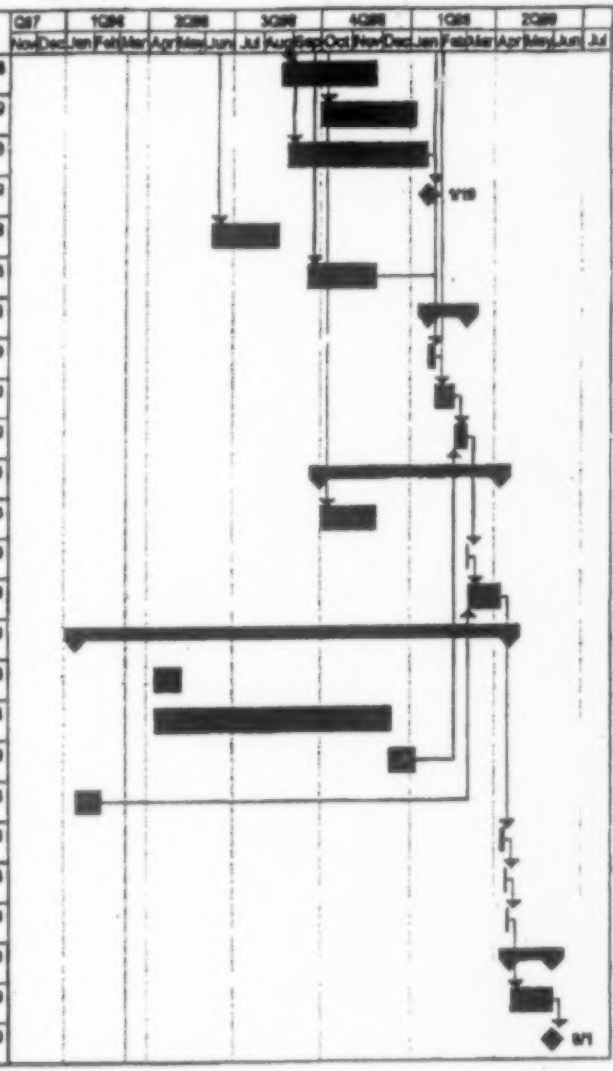

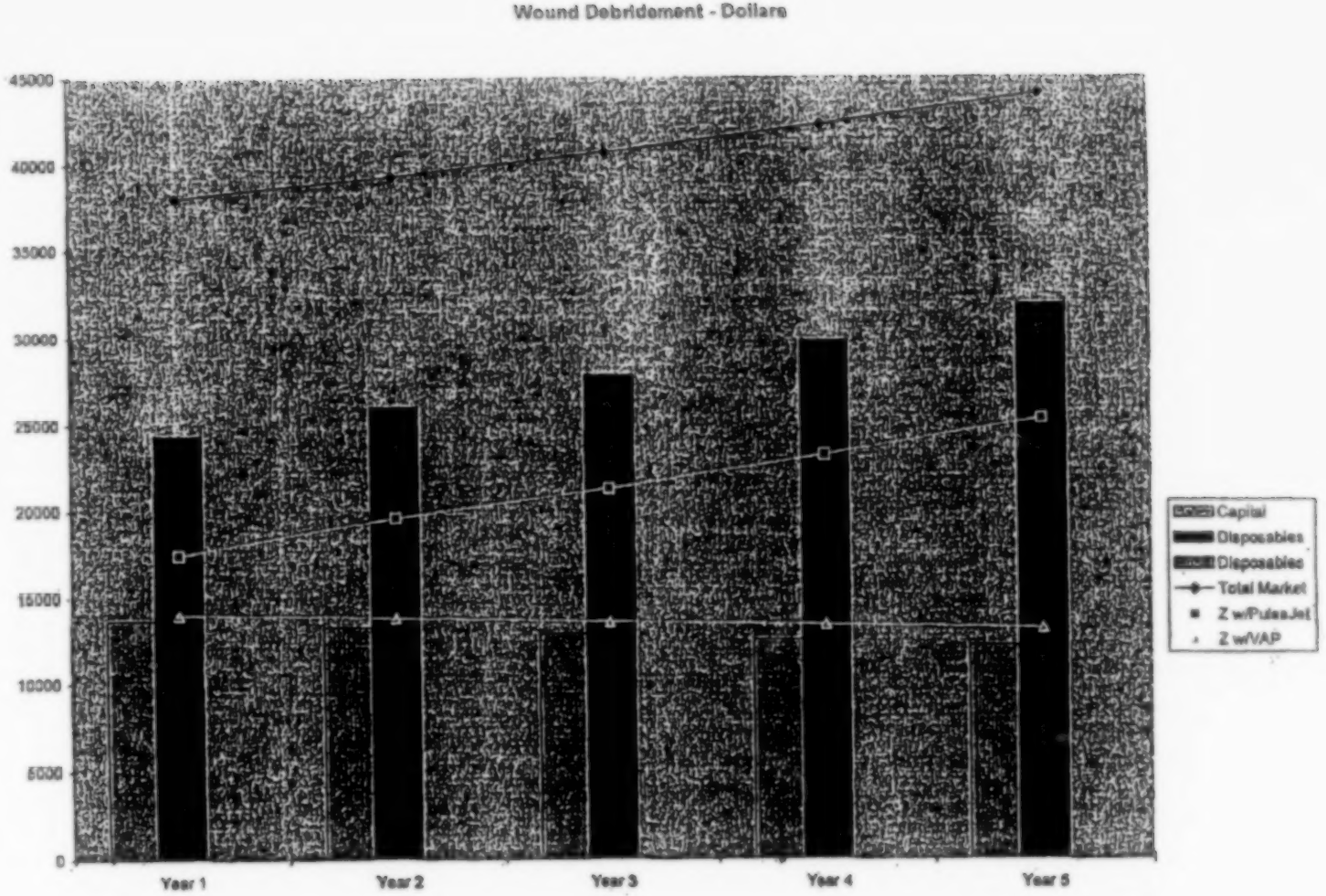
Wound Debridement - Dollars
45000
40000
35000
30000
25000
20000
15000
10000
5000
0
Year 1
Year 2
Year 3
Year 4
Year 5
Capital
Disposables
Disposables
Total Market
Z w/PulseJet
Z w/VAP

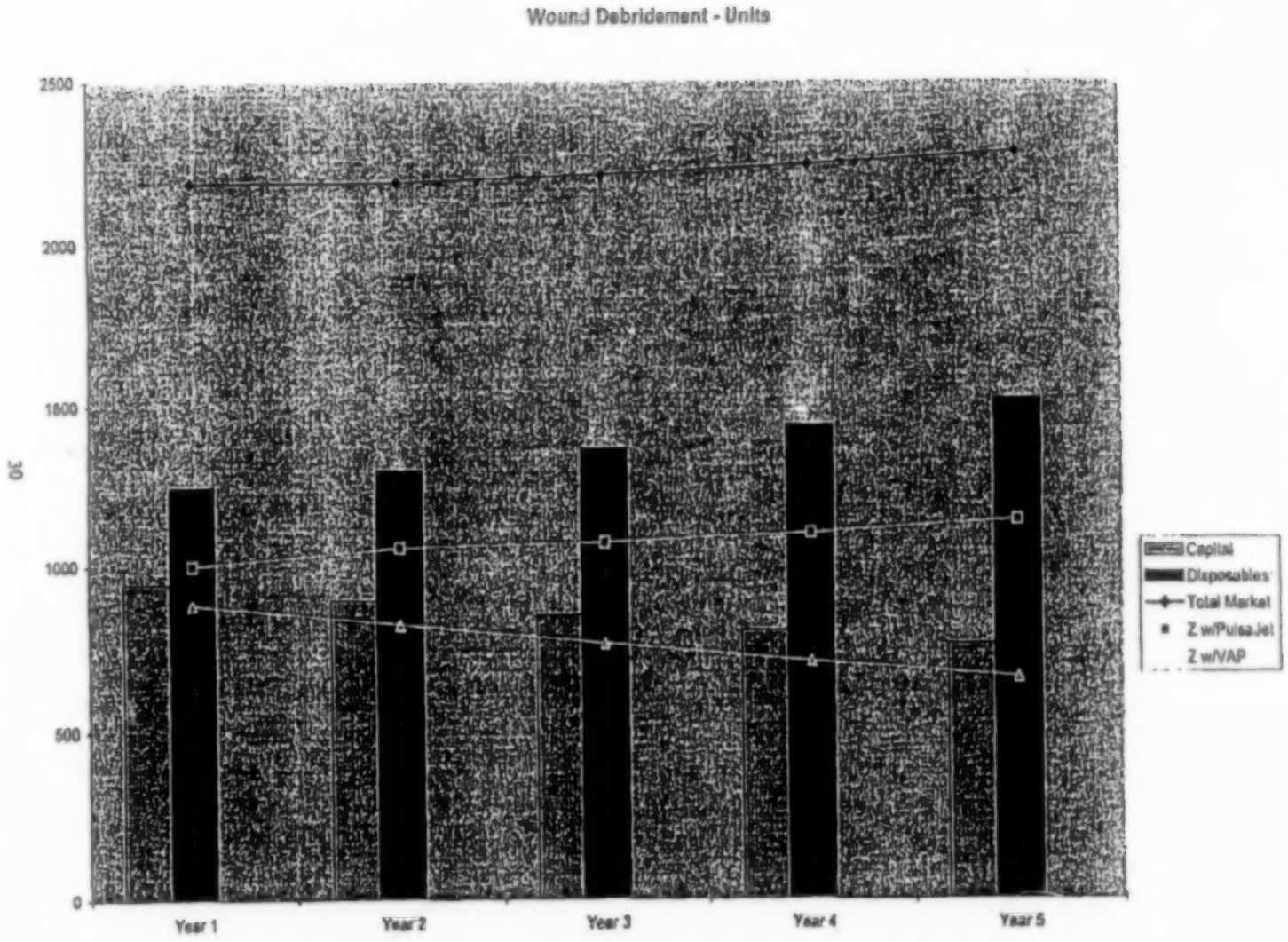
Wound Debridement - Units
2500
2000
1500
1000
500
0
Year 1
Year 2
Year 3
Year 4
Year 5
Capital
Disposables
Total Market
Z w/PulseJet
Z w/VAP

**BATTERY PULSAVAC**

***TOTAL NUMBERS FOR ALL SPREADSHEETS=U.S. ONLY***

| YEAR 1 | M1* | M2 | M3 | M4 | M5 | M6 | M7 | M8 | M9 | M10 | M11 | M12 | TOTAL |
|---|---|---|---|---|---|---|---|---|---|---|---|---|---|
| TRAYS | 495 | 488 | 488 | 488 | 498 | 496 | 496 | 501 | 511 | 511 | 519 | 519 | 6008 |
| COMP. KITS | 679 | 479 | 479 | 479 | 480 | 480 | 480 | 481 | 481 | 481 | 483 | 486 | 5968 |
| ORTHO. TIPS | 357 | 245 | 243 | 243 | 245 | 243 | 243 | 245 | 243 | 243 | 245 | 243 | 3038 |

* =GENERAL RELEASE DATE
=NUMBERS BASED ON 1998 SALES DATA
=NUMBERS ARE REPRESENTED IN BOXES FOR NEW SYSTEM
=Evaluation samples=2000 each: 750=Fan Spray Kit; 750 Shower Spray Kit; 500 Hip Kit

| DESCRIPTIONS: | | |
|---|---|---|
| TRAYS: (W/TIPS) | COMP. KITS: (W/O TIPS) | TIPS: |
| 5150-100 | 5150-20 | 5150-75 |
| 5150-101 | 5150-25 | -95 |
| 5150-200 | 5150-36 | -82 |
| 5150-775 | 5150-300 | -83 |
| 5150-795 | 5150-301 | -84 |
| 5150-782 | 5150-720 | -81 |
| | | -85 |

*PULSAVAC AT RISK*

| YEAR 1 *(210 ACCOUNTS)* | M1* | M2 | M3 | M4 | M5 | M6 | M7 | M8 | M9 | M10 | M11 | M12 | TOTAL |
|---|---|---|---|---|---|---|---|---|---|---|---|---|---|
| TRAYS | 27 | 27 | 27 | 27 | 27 | 27 | 27 | 27 | 27 | 27 | 27 | 27 | 324 |
| COMP. KITS | 393 | 393 | 393 | 393 | 393 | 393 | 393 | 393 | 393 | 393 | 393 | 393 | 4716 |
| ORTHO. TIPS | 230 | 230 | 230 | 230 | 230 | 230 | 230 | 230 | 230 | 230 | 230 | 230 | 2760 |

* =GENERAL RELEASE DATE
=NUMBERS BASED ON 1998 SALES DATA

*SWAP-OUT PRODUCT*

| YEAR 1 | M1* | M2 | M3 | M4 | M5 | M6 | M7 | M8 | M9 | M10 | M11 | M12 | TOTAL |
|---|---|---|---|---|---|---|---|---|---|---|---|---|---|
| TRAYS | 14 | | | | | | | | | | | | 14 |
| COMP. KITS | 197 | | | | | | | | | | | | 197 |
| ORTHO. TIPS | 114 | | | | | | | | | | | | 114 |

* =GENERAL RELEASE DATE
=NUMBERS BASED ON 1998 SALES DATA

*VAR-A-PULSE AT RISK*

| YEAR 1 | M1* | M2 | M3 | M4 | M5 | M6 | M7 | M8 | M9 | M10 | M11 | M12 | TOTAL |
|---|---|---|---|---|---|---|---|---|---|---|---|---|---|
| TRAYS | 454 | 454 | 454 | 454 | 454 | 454 | 454 | 454 | 454 | 454 | 454 | 454 | 5448 |
| COMP. KITS | 89 | 84 | 84 | 84 | 84 | 84 | 84 | 84 | 84 | 84 | 84 | 84 | 1013 |
| ORTHO. TIPS | 13 | 13 | 13 | 13 | 13 | 13 | 13 | 13 | 13 | 13 | 13 | 13 | 156 |

* =GENERAL RELEASE DATE
=NUMBERS BASED ON 1998 SALES DATA

*INCREMENTAL BUSINESS*

| YEAR 1 | M1* | M2 | M3 | M4 | M5 | M6 | M7 | M8 | M9 | M10 | M11 | M12 | TOTAL |
|---|---|---|---|---|---|---|---|---|---|---|---|---|---|
| TRAYS | 0 | 7 | 7 | 7 | 15 | 15 | 15 | 20 | 30 | 30 | 38 | 38 | 222 |
| COMP. KITS | 0 | 2 | 2 | 2 | 3 | 3 | 3 | 4 | 4 | 4 | 6 | 9 | 42 |
| ORTHO. TIPS | 0 | 2 | 0 | 0 | 2 | 0 | 0 | 2 | 0 | 0 | 2 | 0 | 8 |

* =GENERAL RELEASE DATE
=NUMBERS BASED ON 1998 SALES DATA

5% increase in forecast on all other new business after general release

*INTERNATIONAL BUSINESS*

| YEAR 1 | Feb 20' M1* | M2 | M3 | M4 | M5 | M6 | M7 | M8 | M9 | M10 | M11 | M12 | TOTAL |
|---|---|---|---|---|---|---|---|---|---|---|---|---|---|
| TRAYS | | | | | | | | | | | | | 0 |
| COMP. KITS | | | | | | | | | | | | | 0 |
| ORTHO. TIPS | | | | | | | | | | | | | 0 |

**INTERNATIONAL + 30%**

* = RELEASE DATE FOR REGIONS

| REGIONS: | | | | | | | | | | | | |
|---|---|---|---|---|---|---|---|---|---|---|---|---|
| CANADA | X | | | | | | | | | | | |
| AUSTRALIA/NZ | X | | | | | | | | | | | |
| EUROPE | X | | | | | | | | | | | |
| KOREA | | | | | | | X | | | | | |
| TAIWAN | | | | | | | X | | | | | |
| JAPAN | | | | | X | | | | | | | |
| SINGAPORE/ REST OF ASIA | X | | | | | | | | | | | |
| LATIN AMERICA | X | | | | | | | | | | | |
| CEE/EXPORT COUNTRIES | X | | | | | | | | | | | |

# VAR-A-PULSE Time Line:

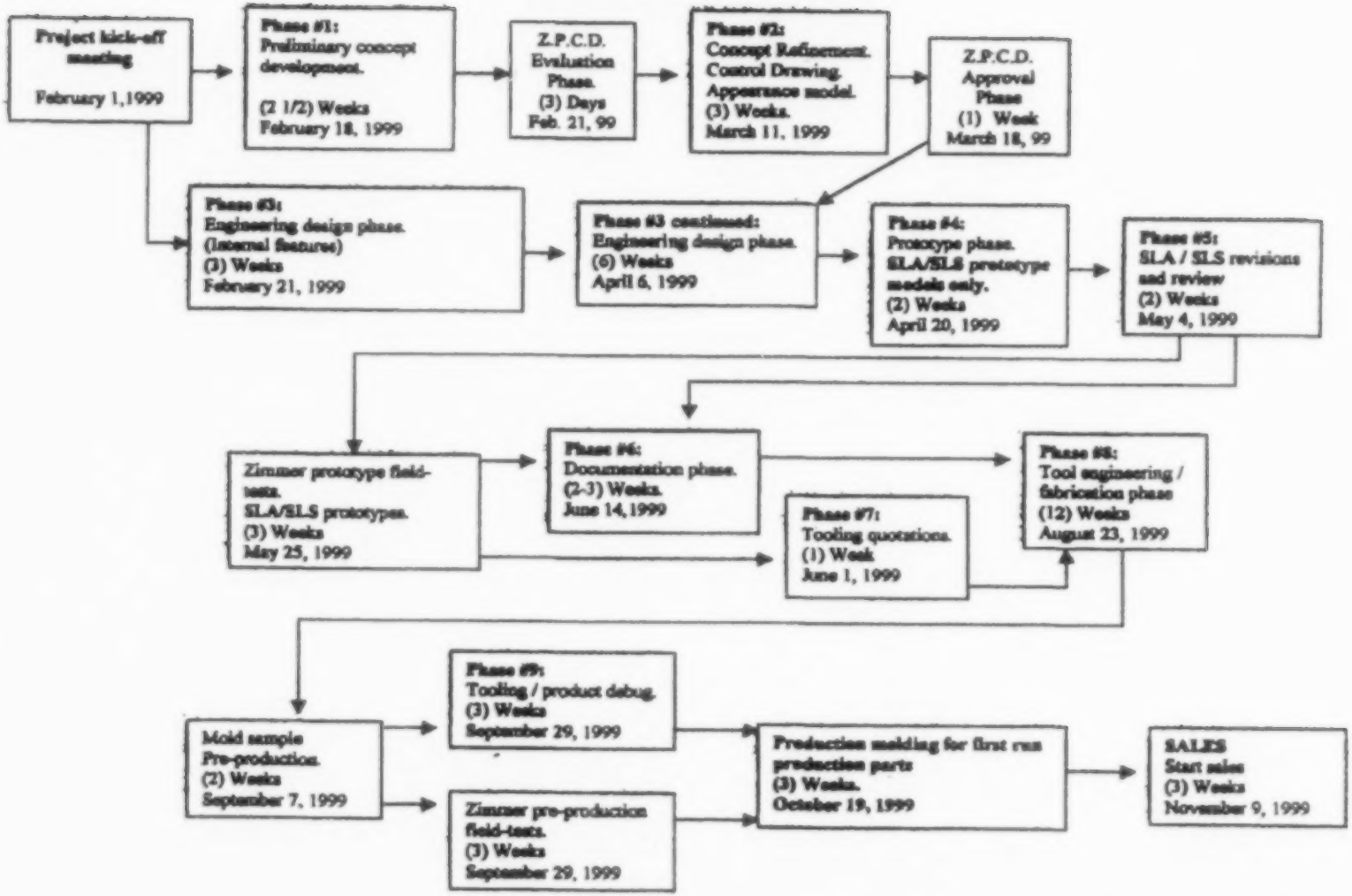

PLAINTIFF'S
EXHIBIT
21
zimmer

# Pulsavac® Plus Family

The *Pulsavac*® Plus, *Pulsavac* Plus LP and *Pulsavac* Plus AC wound debridement systems offer versatile solutions to wound irrigation, wound cleaning and therapy. Three models, featuring lightweight design and trigger-controlled pressure settings, offer a powerful cleaning action for bone or a gentle lavage for soft tissue. Concurrent suction and irrigation help to thoroughly remove debris and contaminants without flooding the field. The *Pulsavac* Plus and *Pulsavac* Plus AC are systems for use in orthopaedic and trauma cases. The *Pulsavac* Plus LP provides gentle lavage for soft tissue debridement.

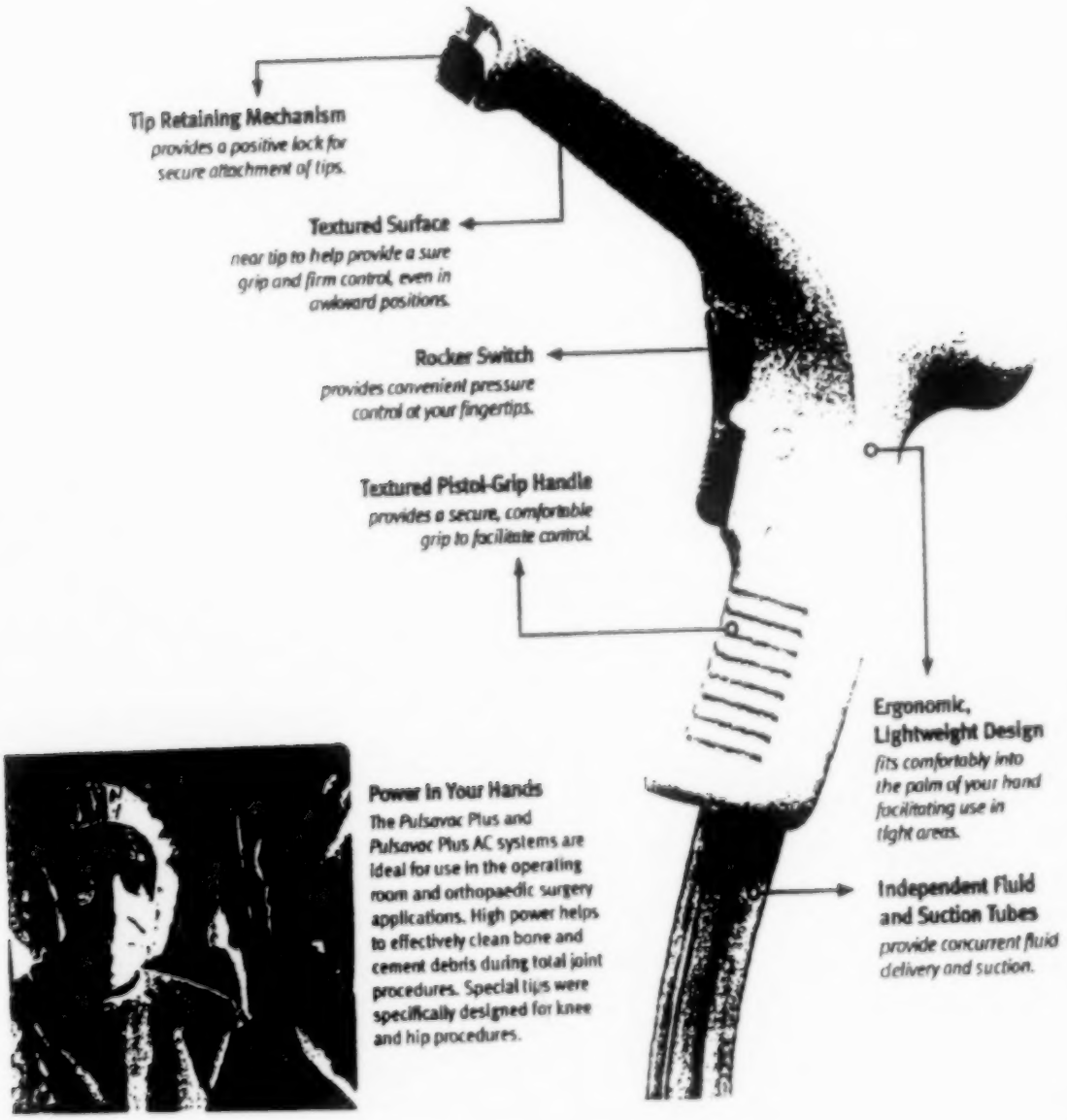




**Power In Your Hands**

The *Pulsavac* Plus and *Pulsavac* Plus AC systems are ideal for use in the operating room and orthopaedic surgery applications. High power helps to effectively clean bone and cement debris during total joint procedures. Special tips were specifically designed for knee and hip procedures.

Combines convenience and power for smooth, efficient pulsative irrigation and debridement. The external battery pack hangs outside the sterile field, and the variety of tips and trigger-controlled pressure offers either powerful cleaning or gentle lavage. The primary application site is the operating room for orthopaedic surgery. *Pulsavac* Plus operates on eight AA batteries.

**Reusable AC Adapter** eliminates the need for alkaline batteries, reducing the amount of waste.

**Pulsavac Plus AC •**

An environmentally-friendly option. The reusable AC Adapter Power Pack must be purchased separately. This system completely eliminates the need for alkaline batteries.

**Pulsavac Plus LP •**

This low pressure system delivers an adjustable, gentle lavage for wound cleaning and therapies and is an excellent alternative to traditional whirlpool therapy treatments. Primary application may occur in the OR, ER, wound care clinics, nursing homes or long-term care facilities. Therapy can be done in the patient's room or at the patient's home.

**Low Pressure Debridement Tip Only**

• 08-5150-186-00 Flexible Tip, 10.5 inch length

Debridement tips include the dual-cone splash shield, designed to minimize splashback and help control the dangers associated with translucent spray.

The color coded dots to the left of the tips indicate system compatibility.

•• 08-5150-175-00 High Capacity Fan Spray w/Splash Shield, 12.7cm length
08-5150-375-00 Without Splash Shield

• 08-5150-176-00 High Capacity Fan Spray w/Filter

•• 08-5150-195-00 High Capacity Shower Spray w/Splash Shield, 12.7cm length
08-5150-395-00 Without Splash Shield

• 08-5150-045-00 High Capacity Wide Single Stream, 7.2cm length

• 08-5150-181-00 High Capacity Four Orifices, 20.32cm x 1.27cm

• 08-5150-183-00 High Capacity Radial Spray, 22.86cm x .89cm

• 08-5150-183-09 High Capacity Brush Tip Radial Spray, 22.86cm x .88cm x 1.52cm

• 08-5150-184-00 High Capacity Hip Revision Tip, 23cm length

• 08-5150-185-00 High Capacity Four Orifices, 30.48cm x 1.27cm

• 08-5150-187-00 High Capacity Fitted Plateau Brush Tip, 7cm length

• 08-5150-145-00 High Capacity Adjustable Length w/Splash Shield

• 08-5150-155-00 High Capacity Single Stream, w/Splash Shield, 12.7cm length

# Ordering Information

| Prod. No. | Description |
|---|---|
| 00-5150-420-00 | *Pulsavac* Plus Component Kit |
| 00-5150-475-00 | *Pulsavac* Plus Fan Kit |
| 00-5150-482-00 | *Pulsavac* Plus Hip Kit |
| 00-5150-495-00 | *Pulsavac* Plus Shower Kit |

| Prod. No. | Description |
|---|---|
| 00-5150-420-01 | *Pulsavac* Plus Component Kit |
| 00-5150-475-01 | *Pulsavac* Plus Fan Kit |
| 00-5150-482-01 | *Pulsavac* Plus Hip Kit |
| 00-5150-495-01 | *Pulsavac* Plus Shower Kit |

| Prod. No. | Description |
|---|---|
| 00-5150-350-00 | *Pulsavac* Plus AC Power Supply (US) |
| 00-5150-426-01 | *Pulsavac* Plus AC Component Kit |
| 00-5150-476-01 | *Pulsavac* Plus AC Fan Spray Kit |
| 00-5150-486-01 | *Pulsavac* Plus AC Hip Kit |
| 00-5150-496-01 | *Pulsavac* Plus AC Shower Spray Kit |

| Prod. No. | Description |
|---|---|
| 00-5150-920-00 | *Pulsavac* Plus LP Component Kit |
| 00-5150-975-00 | *Pulsavac* Plus LP Fan Spray Kit |
| 00-5150-995-00 | *Pulsavac* Plus LP Shower Spray Kit |

| Prod. No. | Description |
|---|---|
| 00-5150-175-00 | High Capacity Fan Spray w/Splash Shield, 12.7cm length |
| 00-5150-176-00 | High Capacity Fan Spray w/Filter |
| 00-5150-195-00 | High Capacity Shower Spray w/Splash Shield, 12.7cm length |
| 00-5150-375-00 | High Capacity Fan Spray w/out Splash Shield, 10cm length |
| 00-5150-395-00 | High Capacity Shower Spray w/out Splash Shield, 10cm length |

| Prod. No. | Description |
|---|---|
| 00-5150-155-00 | High Capacity Single Stream Tip w/Splash Shield, 12.7cm length |
| 00-5150-065-00 | Large Fluid Orifice Tip w/Wide Single Stream, 7.2cm length |

| Prod. No. | Description |
|---|---|
| 00-5150-181-00 | High Capacity IM Tip Four Orifices, 20.32cm x 1.27cm |
| 00-5150-182-00 | High Capacity IM Tip w/Radial Spray, 22.86cm x .89cm |
| 00-5150-183-00 | High Capacity IM Brush Tip w/Radial Spray, 22.86cm x .89cm x 1.52cm |
| 00-5150-184-00 | High Capacity IM Hip Revision Tip, 23cm length |
| 00-5150-185-00 | High Capacity IM Tip Four Orifices, 30.48cm x 1.27cm |
| 00-5150-187-00 | High Capacity Tibial Plateau Brush Tip, 7cm length |

| Prod. No. | Description |
|---|---|
| 00-5150-145-00 | High Capacity Adjustable Length Tip w/Splash Shield |
| 00-5150-186-00 | Flexible Tip, 10.5 inch length |

| Prod. No. | Description |
|---|---|
| 00-5150-188-00 | 18cm Splash Shield |
| 00-5150-189-00 | 23cm Splash Shield |

[redacted]

# Stryker's Infringement Contentions

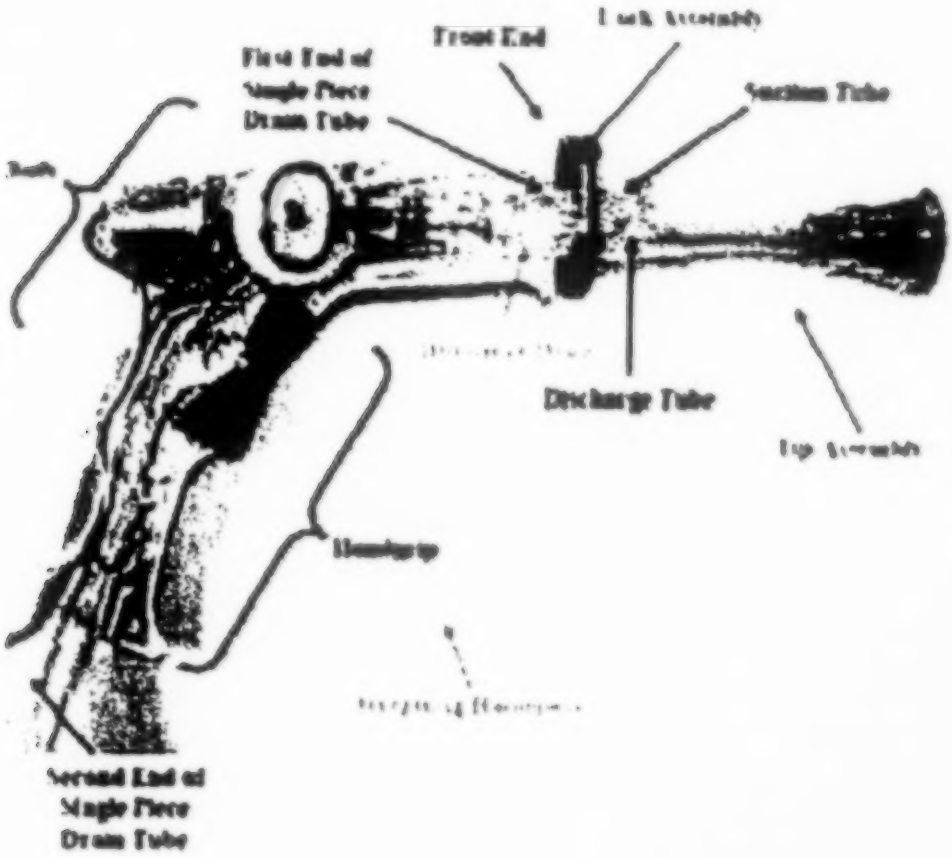

| | | ANTICIPATED? | | OBVIOUS? | |
|---|---|---|---|---|---|
| 1. | Claim 2 of the '329 Patent | ____Yes | X No | ____Yes | X No |
| 2. | Claim 45 of the '807 Patent | ____Yes | X No | ____Yes | X No |
| 3. | Claim 50 of the '807 Patent | ____Yes | X No | ____Yes | X No |
| 4. | Claim 51 of the '807 Patent | ____Yes | X No | ____Yes | X No |
| 5. | Claim 52 of the '807 Patent | ____Yes | X No | ____Yes | X No |
| 6. | Claim 1 of the '383 Patent | | | ____Yes | X No |
| 7. | Claim 2 of the '383 Patent | | | ____Yes | X No |
| 8. | Claim 3 of the '383 Patent | | | ____Yes | X No |
| 9. | Claim 8 of the '383 Patent | | | ____Yes | X No |
| 10. | Claim 10 of the '383 Patent | | | ____Yes | X No |
| 11. | Claim 11 of the '383 Patent | | | ____Yes | X No |
| 12. | Claim 13 of the '383 Patent | | | ____Yes | X No |

| | | OBVIOUS? | |
|---|---|---|---|
| 13. | Claim 17 of the '383 Patent | ____ Yes | X No |
| 14. | Claim 19 of the '383 Patent | ____ Yes | X No |
| 15 | Claim 20 of the '383 Patent | ____ Yes | X No |
| 16. | Claim 22 of the '383 Patent | ____ Yes | X No |
| 17. | Claim 24 of the '383 Patent | ____ Yes | X No |
| 18. | Claim 27 of the '383 Patent | ____ Yes | X No |
| 19. | Claim 38 of the '383 Patent | ____ Yes | X No |
| 20. | Claim 40 of the '383 Patent | ____ Yes | X No |
| 21. | Claim 46 of the '383 Patent | ____ Yes | X No |

If you answered "Yes," enter the dollar amount you find Stryker has proved by a preponderance of the evidence it is entitled to recover as lost profits:

$ 70 MILLION

!. What is the reasonable royalty rate (in percent) that you find Stryker has proven by a preponderance of the evidence should apply to any covered sales of infringing products by Zimmer, assuming validity and infringement of all three patents in suit?

25 % (Double initial percentage of Davol license as we felt 32.2% was too high)

3. What is the dollar amount of sales by Zimmer to which you find Stryker has proven by a preponderance of the evidence the reasonable royalty rate should apply, assuming validity and infringement of all three patents in suit?

$ 254,823,154

a. Do you find that the dollar amount of sales to which the reasonable royalty rate should apply would be any different if fewer than all three of the patents in suit are valid and infringed?

X Yes _____ No

b. If "no," skip to the next question. If "yes," what is the dollar amount of sales by Zimmer to which you find Stryker has established by a preponderance of the evidence the reasonable royalty rate should apply for each of the patents in suit individually?

$ 254,823,154 assuming that only the '329 patent is valid and infringed

$ 254,823,154 assuming that only the '807 patent is valid and infringed

$ 163,647,429.50 assuming that only the '383 patent is valid and infringed

## SIGNATURE BLOCK

We, the jury, unanimously return this verdict form as our verdict in the case:

Date: February 5, 2013 — Jury Foreperson

Date: 2/05/13

Date: 2/5/13

Date: 2/5/13

Date: 2-5-13

Date: 2/05/13

Date: 2-5-13

Date: 2-5-13

can we see all of the physical devices? claim charts as well

3:30
2-4-13
#1

Would it be possible to have the large claim charts in the jury room to present and view all at once as a group?

2:9-13
4.40

(#2)

Were no where near a conclusion. See you tomorrow

2-4-13
4.50

#3

Is there a copy of Mrs Lawton's Full report that we can reference?

Also, [redacted] would it be possible to watch the "Rick May" deposition video again?

#3 12:05 2-5-13

Are we allowed to come up with our own figures for either lost profits amounts or reasonable royalty, i.e, come to a compromise?

If we find one claim of several ~~was~~ obvious, does that make the #4 <u>whole</u> patent invalid?

12:30 #4 2-5-13

We have come to a conclusion and filled out the verdict form.

1:50 pm
2-5-13
#5

No. 14-1520

IN THE

# Supreme Court of the United States

STRYKER CORPORATION, STRYKER PUERTO RICO, LTD., AND STRYKER SALES CORPORATION,
*Petitioners*,

v.

ZIMMER, INC. AND ZIMMER SURGICAL, INC.,
*Respondents*.

**On Petition for a Writ of Certiorari to the United States Court of Appeals for the Federal Circuit**

## BRIEF IN OPPOSITION

DONALD R. DUNNER
*Counsel of Record*
BENJAMIN T. SIROLLY
FINNEGAN, HENDERSON, FARABOW, GARRETT & DUNNER, LLP
901 New York Avenue, NW
Washington, DC 20001-4413
(202) 408-4000
don.dunner@finnegan.com

July 24, 2015

## QUESTIONS PRESENTED

The questions on which Petitioner seeks certiorari mischaracterize the Federal Circuit's law. The questions assert that the Federal Circuit improperly imposes a "rigid" test for the award of enhanced damages under 35 U.S.C. § 284. Rather, the Federal Circuit follows this Court's guidance by requiring parties to prove willful infringement, objectively assessed, as a prerequisite to an award of punitive, enhanced damages.

Accordingly, a more accurate representation of the questions presented is:

1. Has the Federal Circuit failed to properly follow this Court's guidance by interpreting 35 U.S.C. § 284 as requiring a party to prove willful infringement, objectively assessed, to win punitive, enhanced damages?

2. Does a district court have discretion under 35 U.S.C. § 284 to award punitive, enhanced damages, regardless of whether a party willfully infringed?

## PARTIES TO THE PROCEEDING

The caption identifies all parties.

## CORPORATE DISCLOSURE STATEMENT

Pursuant to Rule 29.6 of the Rules of this Court, Zimmer, Inc. and Zimmer Surgical, Inc. state that Zimmer Surgical, Inc. is wholly owned directly and indirectly by Zimmer Inc., and that Zimmer, Inc. is wholly owned directly and indirectly by Zimmer Biomet Holdings, Inc. More than 10% of the stock of Zimmer Biomet Holdings, Inc. is held by a consortium of private equity funds affiliated with four investment firms, two of which, the Blackstone Group L.P. and The Goldman Sachs Group, Inc., are publicly traded.

## TABLE OF CONTENTS

Page

QUESTIONS PRESENTED ..... i

PARTIES TO THE PROCEEDING ..... ii

CORPORATE DISCLOSURE STATEMENT ..... iii

TABLE OF AUTHORITIES ..... vii

I. PRELIMINARY STATEMENT ..... 1

II. REASONS FOR DENYING THE PETITION ..... 5

A. This Case Is a Poor Vehicle for Supreme Court Review of Enhanced Damages Under § 284 ..... 5

1. Petitioner Waived Challenge to the Two-Part Willfulness Test for Enhanced Damages at the Federal Circuit ..... 5

2. The Federal Circuit Determined that En Banc Review in This Case Was Not Appropriate ..... 7

B. In Any Event, the Court Should Deny the Petition ..... 9

1. The Appellate Court's Decision Was Correct.....9

a. Petitioner and Its Patents.....9

b. Respondent's Defenses.....11

c. The District Court's Decision and the Appellate Court's Reversal on Enhanced Damages.....14

2. The Willfulness Test for Enhanced Damages Is Based on Long-Standing Supreme Court Precedent .....16

3. *Octane* and *Highmark* Do Not Alter the Test or Standard of Review for Objective Willfulness .....19

4. Appellate Courts Properly Review De Novo a Party's Objective Risk of Harm.....22

5. The Enhanced-Damages Framework Is Consistent with the Text of § 284 .....25

III. CONCLUSION .....31

**APPENDIX**

REPLY TO DEFENDANTS-APPELLANTS' OPPOSITION TO PLAINTIFFS-APPELLEES' MOTION FOR LEAVE TO FILE SUPPLEMENTAL BRIEFING .....174a

## TABLE OF AUTHORITIES

**Page(s)**

**Cases**

*Adickes v. S.H. Kress & Co.*,
398 U.S. 144 (1970).....1, 6, 8

*Allen Engineering Corp. v. Bartell Industries, Inc.*,
299 F.3d 1336 (Fed. Cir. 2002).....21

*Arizona v. Evans*,
514 U.S. 1 (1995).....7

*Aro Manufacturing Co. v. Convertible Top Replacement Co.*,
377 U.S. 476 (1964).....16, 18, 27

*Bard Peripheral Vascular, Inc. v. W.L. Gore & Associates, Inc.*,
682 F.3d 1003 (Fed. Cir. 2012).....19, 22

*Baseball Display Co. v. Star Ballplayer Co.*,
35 F.2d 1 (3d Cir. 1929).....17

*Carnegie Mellon University v. Marvell Technology Group, Ltd.*,
No. 2:09-cv-00290 (W.D. Pa. May 7, 2014), Final Judgment, ECF No. 948 .....23

*Cooter & Gell v. Hartmarx Corp.*,
496 U.S. 384 (1990).....8

*Dowling v. United States*,
473 U.S. 207 (1985).....17

*Eltra Corp. v. Basic Inc.*,
599 F.2d 745 (6th Cir. 1979).....18

*Exxon Shipping Co. v. Baker*,
554 U.S. 471 (2008).....19, 25

*Filer & Stowell Co. v. Diamond Iron Works*,
270 F. 489 (7th Cir. 1921).....17

*Florida Prepaid Postsecondary Education Expense Board v. College Savings Bank*,
527 U.S. 627 (1999).....19, 26

*General Motors Corp. v. Devex Corp.*,
461 U.S. 648 (1983).....29, 30

*Geo. M. Martin Co. v. Alliance Machine Systems International LLC*,
618 F.3d 1294 (Fed. Cir. 2010).....21

*Haas v. Peake*,
544 F.3d 1306 (Fed. Cir. 2008).....6

*Halo Electronics, Inc. v. Pulse Electronics, Inc.*,
780 F.3d 1357 (Fed. Cir. 2015).....9, 25

*Highmark Inc. v. Allcare Health Management System, Inc.*,
134 S. Ct. 1744 (2014).....4, 8, 21, 23

*Highmark, Inc. v. Allcare Health Management System, Inc.*, 701 F.3d 1351 (Fed. Cir. 2012) ..... 23

*i4i Ltd. Partnership v. Microsoft Corp.*, 598 F.3d 831 (Fed. Cir. 2010), *aff'd*, 131 S. Ct. 2238 (2011) ..... 22

*Independent Federation of Flight Attendants v. Zipes*, 491 U.S. 754 (1989) ..... 25

*In re Seagate Technology, LLC*, 497 F.3d 1360 (Fed. Cir. 2007) (en banc) ..... *passim*

*Knorr-Bremse Systeme Fuer Nutzfahrzeuge GmbH v. Dana Corp.*, 383 F.3d 1337 (Fed. Cir. 2004) (en banc) ..... 19

*Lorillard v. Pons*, 434 U.S. 575 (1978) ..... 18

*Markman v. Westview Instruments, Inc.*, 517 U.S. 370 (1996) ..... 24

*Martin v. Franklin Capital Corp.*, 546 U.S. 132 (2005) ..... 25

*Meyer v. Holley*, 537 U.S. 280 (2003) ..... 1, 7

*Miller v. Fenton*,
474 U.S. 104 (1985).....23

*Octane Fitness, LLC v. ICON Health & Fitness, Inc.*,
134 S. Ct. 1749 (2014).....3, 20, 30, 31

*Pennsylvania Department of Corrections v. Yeskey*,
524 U.S. 206 (1998).....7

*Pentax Corp. v. Robison*,
135 F.3d 760 (Fed. Cir. 1998).....6

*Pierce v. Underwood*,
487 U.S. 552 (1988).....23

*Power Specialty Co. v. Connecticut Light & Power Co.*,
80 F.2d 874 (2d Cir. 1936).....17

*Read Corp. v. Portec, Inc.*,
970 F.2d 816 (Fed. Cir. 1992).....2, 22, 26

*Root v. Railway Co.*,
105 U.S. 189 (1881).....19

*Safeco Insurance Co. of America v. Burr*,
551 U.S. 47 (2007).....4, 20, 21

*Seymour v. McCormick*,
57 U.S. 480 (1853).....3, 16, 17, 26

*Union Carbide Corp. v. Graver Tank & Manufacturing Co.*,
282 F.2d 653 (7th Cir. 1960).....18

*W.S. Godwin Co. v. International Steel Tie Co.*,
29 F.2d 476 (6th Cir. 1928).....17

*Warner-Jenkinson Co. v. Hilton Davis Chemical Co.*,
520 U.S. 17 (1997).....21

*Wilden Pump & Engineering Co. v. Pressed & Welded Products Co.*,
655 F.2d 984 (9th Cir. 1981).....18

**Statutes**

35 U.S.C. § 284.....*passim*

35 U.S.C. § 285.....*passim*

35 U.S.C. § 298.....29

Patent Act of 1836, ch. 357, 5 Stat. 117, § 14 (1836).....16

**Other Authorities**

157 Cong. Rec. S1050 (daily ed. Mar. 1, 2011).....28, 29

157 Cong. Rec. S1374 (daily ed. Mar. 8, 2011).....28

Christopher B. Seaman, *Willful Patent Infringement and Enhanced Damages After In re Seagate: An Empirical Study*, 97 L. Rev. 417 (2012).....24

Cong. Rec. H1857 (daily ed. Mar. 4, 1946).....27

H.R. Rep. No. 97-312 (1981).....25

H.R. Rep. No. 1923, 82d Cong., 2d Sess.....27

Recovery in Patent Infringement Suits: Hearing on H.R. 5231 Before the House Committee on Patents, 79th Cong. (1946).....28

Zimmer, Inc. and Zimmer Surgical, Inc. (collectively "Respondent") respectfully file this opposition to the petition for a writ of certiorari filed by Stryker Corporation, Stryker Puerto Rico, LTD., and Stryker Sales Corporation (collectively "Petitioner").

## I. PRELIMINARY STATEMENT

Petitioner asks this Court to depart from its normal practice by considering issues that the court of appeals did not. "Where issues are neither raised before nor considered by the Court of Appeals, this Court will not ordinarily consider them." *Adickes v. S.H. Kress & Co.*, 398 U.S. 144, 147 n.2 (1970). The Federal Circuit neither considered nor decided the questions Petitioner presents, so this Court should decline their review.

In fact, Petitioner previously renounced its first question presented. Petitioner there asks this Court to consider whether the willfulness requirement and the two-part test announced in *In re Seagate Technology, LLC*, 497 F.3d 1360, 1370-71 (Fed. Cir. 2007) (en banc), improperly constrain district courts from enhancing damages under 35 U.S.C. § 284. But Petitioner explicitly waived such a challenge at the Federal Circuit. Petitioner wrote: "[Petitioner] *does not challenge* on appeal the correctness of the two-prong, objective/subjective inquiry for willfulness set forth in *In re Seagate Technology* . . . ." App. 182a (emphasis added). Accordingly, the Federal Circuit did not consider the issue. For at least this reason, the petition should fail. *See, e.g.*, *Meyer v. Holley*,

537 U.S. 280, 291 (2003) ("[I]n the absence of consideration of that matter by the Court of Appeals, we shall not consider it."). And this Court should follow its ordinary practice and allow these relatively new questions to percolate further at the Federal Circuit.

Petitioner raises other arguments that it failed to present below. For example, Petitioner asserts that the *Read* factors, *Read Corp. v. Portec, Inc.*, 970 F.2d 816, 826-28 (Fed. Cir. 1992), should guide a district court's willfulness decision. Pet. 32-34. Petitioner contrives this new challenge before this Court, never having asserted it below at any stage.

Finally, Petitioner asserts that the appellate court should review a district court's determination under the objective prong of willful infringement with deference. Pet. 34-37. But this challenge also fails to present an appropriate issue for review. As the Federal Circuit explained, its decision did not implicate the standard of review because the district court erred under either standard:

> This court has not yet addressed whether *Octane Fitness, LLC v. ICON Health & Fitness, Inc.*, 134 S. Ct. 1749, 188 L. Ed. 2d 816 (2014), or *Highmark Inc. v. Allcare Health Mgmt. Sys., Inc.*, 134 S. Ct. 1744, 1746, 188 L. Ed. 2d 829 (2014), altered the standard of review under which this court analyzes the objective prong of willfulness. However, as the district court failed to undertake any objective assessment of

> [Respondent]'s specific defenses, the district court erred under any standard of review and thus this court need not now address what standard of review is proper regarding the objective prong of willfulness.

App. 22a n.6. For this reason, this case presents a poor vehicle to consider the appropriate standard of appellate review.

In any event, *Octane* and *Highmark* do not undermine the Federal Circuit's de novo review of the district court's objective-willfulness finding, as Petitioner suggests. *Octane* and *Highmark* addressed the proper test and standard of review for awarding attorney's fees for exceptional cases under 35 U.S.C. § 285. The issue in this case is enhanced damages under § 284. These issues are fundamentally different and dictate different governing tests and standards of review. Attorney's fees are compensatory, but enhanced damages are punitive. In *Octane*, this Court explained that compensatory attorney's fees may be awarded under § 285 for merely "unreasonable" litigation conduct. *Octane*, 134 S. Ct. at 1755-56. Unreasonable conduct is not enough, however, for punitive enhanced damages under § 284. Rather, as this Court explained over a century ago, punitive or enhanced damages require willful infringement. *Seymour v. McCormick*, 57 U.S. 480, 488-89 (1853). And willfulness requires reckless behavior, which this Court has held requires "conduct violating an

objective standard." *Safeco Ins. Co. of Am. v. Burr*, 551 U.S. 47, 68-69 (2007); *Seagate*, 497 F.3d at 1370-71 (citing *Safeco* for the proposition that recklessness is judged against an objective standard). Since this Court in *Highmark* changed the appellate standard of review based on its concurrent decision in *Octane* to eliminate the objective/subjective test for attorney's fees, *Highmark*, 134 S. Ct. at 1748-49, it follows that these cases do not dictate the standard of review under § 284, which is properly judged against an objective/subjective standard.

Finally, Petitioner's proposed changes would also undercut the Federal Circuit's ability to bring uniformity to patent law. Petitioner's changes would increase the variability in willfulness judgments between districts and encourage forum shopping. And the changes will force small companies to settle when they are unable to bear the risk of large judgments, such as the one hundred forty million dollar punitive judgment levied against Respondent below.

## II. REASONS FOR DENYING THE PETITION

### A. This Case Is a Poor Vehicle for Supreme Court Review of Enhanced Damages Under § 284

#### 1. Petitioner Waived Challenge to the Two-Part Willfulness Test for Enhanced Damages at the Federal Circuit

The Federal Circuit did not opine on either of Petitioner's questions presented. And Petitioner waived challenge to willfulness and *Seagate*'s two-part test. Petitioner did not raise these challenges in any of its appeal briefs, letters, or motions before the Federal Circuit panel. Nor did Petitioner present its position at oral argument. Rather, as Petitioner explained, it asked the panel to focus exclusively on the standard of review:

> [Petitioner] *does not challenge* on appeal the correctness of the two-prong, *objective/subjective inquiry* for *willfulness* set forth in *In re Seagate Technology, LLC*, 497 F.3d 1360, 1371 (Fed. Cir. 2007) (en banc) because [Petitioner] prevailed on willfulness below even under the stringent standard set forth therein. Rather, [Petitioner] submits that de novo review of the objective prong of willfulness under *Bard* would be improper.

App. 182a (emphases added). Petitioner thus "d[id] not challenge" the willfulness requirement or the substantive enhanced-damages test, but only challenged appellate deference of findings under that test.

After the panel held that Respondent did not willfully infringe, Petitioner requested en banc rehearing. Petitioner presented several new questions for en banc review, including questions paralleling those it now presents. But Petitioner waited too long to submit these questions for Federal Circuit review, as a party cannot raise a new argument in its petition for rehearing en banc. *See, e.g.*, *Haas v. Peake*, 544 F.3d 1306, 1308 (Fed. Cir. 2008) ("Because Mr. Haas failed to raise [a statutory-construction] argument in his brief on appeal, despite the Veterans Court's ruling that the statute was ambiguous and despite otherwise extensive briefing on the issue of statutory interpretation, the argument has been waived."); *Pentax Corp. v. Robison*, 135 F.3d 760, 762 (Fed. Cir. 1998) ("Just as this court will not address issues raised for the first time on appeal or issues not presented on appeal, we decline to address the government's new theory raised for the first time in its petition for rehearing."). The Federal Circuit never reached Petitioner's questions and denied its petition for rehearing en banc.

"Where issues are neither raised before nor considered by the Court of Appeals, this Court will not ordinarily consider them." *Adickes*, 398 U.S. at

147 n.2; *Meyer*, 537 U.S. at 291 ("[I]n the absence of consideration of that matter by the Court of Appeals, we shall not consider it."); *Pa. Dep't of Corr. v. Yeskey*, 524 U.S. 206, 212-13 (1998). Because the Federal Circuit has neither heard nor decided how *Octane* and *Highmark* affect enhanced damages under § 284, the Court should allow these issues to percolate further in the Federal Circuit. *See, e.g.*, *Arizona v. Evans*, 514 U.S. 1, 23 n.1 (1995) (Ginsburg, J., dissenting) ("We have in many instances recognized that when frontier legal problems are presented, periods of 'percolation' in, and diverse opinions from, state and federal appellate courts may yield a better informed and more enduring final pronouncement by this Court.").

### 2. The Federal Circuit Determined that En Banc Review in This Case Was Not Appropriate

Before the panel, Petitioner challenged the standard of review for the objective prong of willfulness. But the Federal Circuit already determined that Petitioner's challenge to the standard of review would not alter the ultimate outcome in the case. Under *Seagate*'s objective-recklessness test—challenge to which Petitioner waived—the district court applied the wrong law. As the panel explained, the district court "failed to undertake an objective assessment of [Respondent]'s specific defenses to [Petitioner]'s claims," as *Seagate* requires. App. 22a. So the district court erred under

any standard. *See Highmark*, 134 S. Ct. at 1748 n.2 ("The abuse-of-discretion standard does not preclude an appellate court's correction of a district court's legal or factual error: 'A district court would necessarily abuse its discretion if it based its ruling on an erroneous view of the law . . . .'" (quoting *Cooter & Gell v. Hartmarx Corp.*, 496 U.S. 384, 405 (1990))). Thus, the Federal Circuit explained, "as the district court failed to undertake any objective assessment of [Respondent's] specific defenses, the district court erred under any standard of review and thus this court *need not now address* what standard of review is proper regarding the objective prong of willfulness." App. 22a n.6 (emphasis added). Because Petitioner's challenge to the standard of review would not change the outcome of the case, the Federal Circuit declined to consider the issue in this case. And because the appellate court neither heard nor decided the issue, this Court should also decline to consider the issue in this case. *See, e.g.*, *Adickes*, 398 U.S. at 147 n.2.

Petitioner wrongly portrays the Federal Circuit as "unwilling to reconsider" the effects of *Octane* and *Highmark* on § 284. Pet. 20. But while the cases before the Federal Circuit thus far have been poor vehicles for en banc review, the Federal Circuit has expressed much interest in this issue, indicating that it will ultimately consider the issue in the appropriate case. Indeed, at least six Federal Circuit Judges have acknowledged the importance of these questions. And not one Federal Circuit Judge has expressed disinterest or an "unwilling[ness]" to

reconsider these issues, as Petitioner suggests. For example, in *Halo Electronics*, Judge Taranto, concurring in the denial of Halo's petition and joined by Judge Reyna, explained that while *Octane* and *Highmark* present questions ripe for review, Halo's petition failed to raise them. *Halo Elecs., Inc. v. Pulse Elecs., Inc.*, 780 F.3d 1357, 1360 (Fed. Cir. 2015) (Taranto, J., concurring). Judge O'Malley, joined by Judge Hughes, also indicated an interest in "reevaluat[ing] our jurisprudence governing an award of enhanced damages under 35 U.S.C. § 284." *Id.* at 1361 (O'Malley, J., dissenting). Finally, in this case, Judges Prost, Newman, and Hughes acknowledged that the appellate court has "not yet" revisited the standard of review for enhanced damages in light of *Octane* and *Highmark*, revealing the court's intent to ultimately do so in the appropriate case. App. 22a n.6. As such, this Court should deny Petitioner's request and allow these issues to percolate further in the appellate court.

### B. In Any Event, the Court Should Deny the Petition

#### 1. The Appellate Court's Decision Was Correct

##### a. Petitioner and Its Patents

Petitioner's patents are all directed to a "pulsed lavage" device that squirts pulsed fluid (e.g., saline) from a plastic gun-shaped handpiece to clean an operating site:

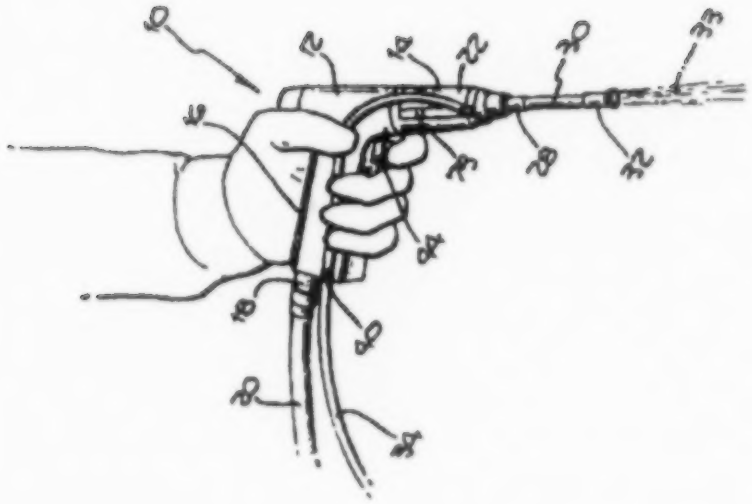

Pat. 4,583,531, Fig. 1 (issued Apr. 22, 1986, to Mattchen). The invention falls within a crowded, heavily patented technological field.

Petitioner's first patent, U.S. Patent No. 6,022,329 ("the '329 patent"), issued in February 2000. In that same year, Petitioner sued a different manufacturer of pulsed lavage devices for infringing the '329 patent, and Petitioner's employees inspected and tested Respondent's devices later accused in this lawsuit. App. 5a. But it was not until 2010, nearly a decade later, that Petitioner actually sued Respondent for infringement of the patents-in-suit. *See id.* Indeed, it was not until Respondent invested ten years in the accused products and Respondent's customers (physicians) grew accustomed to those products that Petitioner filed suit.

After a jury trial, the district court awarded Petitioner over two hundred forty-eight million dollars in damages, of which only seventy million dollars compensated for lost profits. App. 50a, 120a-

122a. Even with the ten-year delay and the existence of objectively reasonable defenses to each of Petitioner's claims of infringement, the Court awarded Petitioner treble damages of over one hundred forty million dollars. App. 121a.

### b. Respondent's Defenses

In both the district court and on appeal, Respondent presented reasonable defenses to Petitioner's claim that Respondent infringed three patents. With respect to the first, the '329 patent, Respondent asserted that the district court's judgment was based on an erroneous construction of the claim term "handle" and that, under that construction, it did not infringe. App. 8a-9a. Respondent explained that the district court construed the "handle" of the gun-like handpiece to include the barrel, App. 8a, notwithstanding that Petitioner had specifically defined the handle as being distinct from the barrel in the patent specification, *see* App. 9a:

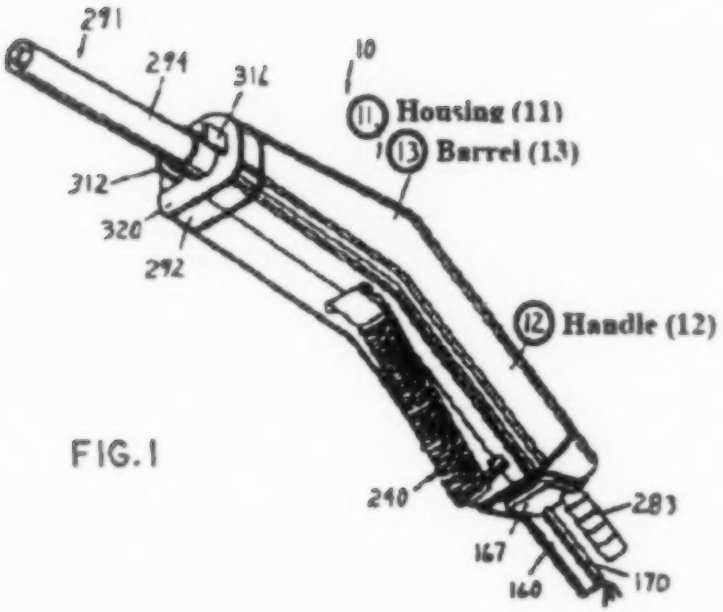


FIG. 1

'329 patent, Fig. 1 (annotations added). Indeed, Petitioner had argued that the handle was distinct from the barrel in its communications with the U.S. Patent and Trademark Office ("PTO") to distinguish prior patents in this crowded field and thus convince the PTO to grant its patent. App. 10a.

Against the second patent, U.S. Patent No. 6,179,807 ("the '807 patent"), Respondent also argued that the district court erred in granting summary judgment of infringement of the '807 patent. App. 13a-17a. Respondent explained that the court not only misconstrued the claim term "receive" but also ignored material facts regarding whether the accused handpieces "receive" the associated tip. App. 14a. In the context of mechanical inventions involving the male-female type of connections disclosed in the patent specification, Respondent explained that the word

"receive" means more than merely coupling or attaching. *Id.* Moreover, the specification discloses that it is important that the handpieces "receive" or act as a container for the tip (and not the other way around) for a specific reason: to prevent clogging. '807 patent col. 11 ll. 29-34. But in Respondent's accused devices, the tip "receives" the handpiece, the opposite of what was required by Petitioner's patent claims. Because infringement requires that the accused product include every claim element and Respondent's devices did not include every element, the district court erred in granting summary judgment of infringement.

Respondent also asserted that it could not infringe the '807 patent because it was invalid. App. 16a-17a. To prove infringement, Petitioner proffered a broad construction of the claim term "lock assembly." *See* App. 17a. The district court did not, however, hold Petitioner to that same claim construction when analyzing validity. *See* App. 16a-17a.

Finally, Respondent asserted that Petitioner's third patent, U.S. Patent No. 7,144,383 ("the '383 patent"), was invalid as obvious. App. 18a. Respondent relied on the same prior patents used by the PTO to reject nearly identical claims in a related patent application filed by Petitioner. *See* App. 19a. The only difference between the '383 patent claims and the prior patent was that the claims required an electric motor whereas the prior patent used a pneumatic motor. App. 18a. Because substituting a

pneumatic motor with an electric one involves only routine skill and yields fully predictable results, Respondent asserted that no reasonable jury could conclude that the '383 patent was not obvious. App. 18a-19a. At a minimum, Respondent's defenses to Petitioner's infringement claims were not objectively unreasonable and the district court should not have awarded punitive damages of over one hundred forty million dollars.

Indeed, the Federal Circuit repeatedly noted that Petitioner narrowly succeeded on its claims. As to the '807 patent, the Federal Circuit explained that it was "a close case" between the parties' positions. App. 16a. And as to the '329 patent, the court stated that "[Respondent]'s claim construction and non-infringement positions were not unreasonable." App. 13a.

### c. The District Court's Decision and the Appellate Court's Reversal on Enhanced Damages

The district court nonetheless concluded that Respondent's defenses were objectively unreasonable and trebled Petitioner's seventy-million-dollar lost-profit award under 35 U.S.C. § 284. App. 119a. In doing so, the district court failed to apply the objective prong of the two-part test set forth in *Seagate*. As the Federal Circuit explained:

> The district court failed to undertake an objective assessment of [Respondent]'s specific defenses to [Petitioner]'s claims. Instead, the district court's analysis of objective reasonableness summarily asserted that the "jury heard testimony" that [Respondent] "all but instructed its design team to copy [Petitioner]'s products." The district court further concluded that the "pioneering" nature of [Petitioner]'s inventions and the secondary considerations of non-obviousness "made it dramatically less likely that [Respondent]'s invalidity arguments were reasonable."
>
> An objective assessment of the case shows that [Respondent] presented reasonable defenses to all of the asserted claims of [Petitioner]'s patents.

App. 22a-23a (citations omitted). Because the district court failed to analyze the objective prong for willfulness, the Federal Circuit held that it erred under any standard of review. App. 22a n.6. Moreover, because Respondent's defenses were objectively reasonable, the Federal Circuit correctly concluded that Respondent did not willfully infringe and Petitioner was not entitled to over one hundred forty million dollars in punitive damages. App. 23a-24a.

### 2. The Willfulness Test for Enhanced Damages Is Based on Long-Standing Supreme Court Precedent

Petitioner's challenge to the willfulness requirement sets aside over a century of precedent. Petitioner argues that § 284 as broadly written does not expressly refer to willful infringement. Pet. 3. But an award of up to three times enhanced damages on top of compensatory damages was first introduced into American patent law by the Patent Act of 1836, ch. 357, 5 Stat. 117, § 14 (1836), and has regularly required a showing of willful and wanton infringement, as demonstrated below. And none of the prior versions of § 284 expressly required "willful infringement" either, as Petitioner concedes. Pet. 11.

Yet the willfulness requirement existed then as now. This Court examined the requirement in 1856, explaining that the Patent Act of 1836 granted judges "power to inflict vindictive or punitive damages," but noted that "there is no good reason why taking a man's property in an invention should be trebly punished . . . [unless] the injury is wanton or malicious." *Seymour*, 57 U.S. at 488-89. As the en banc Federal Circuit in *Seagate* explained, "that an award of enhanced damages requires a showing of willful infringement" is a "well-established standard [that] accords with Supreme Court precedent." *Seagate*, 497 F.3d at 1368 (citing *Aro*

*Mfg. Co. v. Convertible Top Replacement Co.*, 377 U.S. 476, 508 (1964) (enhanced damages under 35 U.S.C. § 284 were available for willful or bad-faith infringement); *Dowling v. United States*, 473 U.S. 207, 227 n.19 (1985) (enhanced damages under 35 U.S.C. § 284 are available for "willful infringement"); *Seymour*, 57 U.S. at 489).

Similar to this Court's 1853 decision in *Seymour*, other pre-1952 circuit-court cases also required a showing of willful and wanton conduct to justify enhanced or punitive damages in patent cases. *See, e.g., Power Specialty Co. v. Conn. Light & Power Co.*, 80 F.2d 874, 878 (2d Cir. 1936) ("There is no justification for punitive damages here as upon wanton, deliberate, and willful infringement."); *Baseball Display Co. v. Star Ballplayer Co.*, 35 F.2d 1, 4 (3d Cir. 1929) ("[B]ecause of the deliberate and willful infringement, [patentee should also receive] punitive damages in 50 per cent. of the actual."); *W.S. Godwin Co. v. Int'l Steel Tie Co.*, 29 F.2d 476, 478 (6th Cir. 1928) (reversing and enhancing damages because "[w]e consider that the reasonable royalty found by the District Court should be doubled by the way of increased damages on account of this willful infringement"); *Filer & Stowell Co. v. Diamond Iron Works*, 270 F. 489, 490 (7th Cir. 1921) (Because "the infringement [was] properly found to have been flagrant and willful, the District Court was further warranted in increasing the damages as it did . . . ."). Likewise, circuit-court cases decided after 1952 consistently treated enhanced damages as a punitive provision, requiring willfulness. *E.g.*,

*Union Carbide Corp. v. Graver Tank & Mfg. Co.*, 282 F.2d 653, 675 (7th Cir. 1960) ("[I]t is only on the basis of conscious and wilful infringement that exemplary or punitive damages are allowed in addition to those which are compensatory."); *Wilden Pump & Eng'g Co. v. Pressed & Welded Prods. Co.*, 655 F.2d 984, 988-90 (9th Cir. 1981) (reversing the district court's determination "that the appellants' infringement was willful, intentional and deliberate, and therefore subject to an award of increased damages pursuant to 35 U.S.C. § 284"); *Eltra Corp. v. Basic Inc.*, 599 F.2d 745, 758 (6th Cir. 1979) ("These facts simply do not make out a wilful infringement so that there was no basis whatever on which to award damages in excess of those intended to compensate Basic for its loss.").

Thus, when Congress re-enacted the enhanced-damages provision without substantive change in 1952, *Aro*, 377 U.S. at 505 n.20, it understood full well that willful infringement is required for an award of enhanced damages. *See Lorillard v. Pons*, 434 U.S. 575, 580-81 (1978) ("Congress is presumed to be aware of an administrative or judicial interpretation of a statute and to adopt that interpretation when it re-enacts a statute without change . . . ."); *see also* Section II.B.4, *infra*.

### 3. *Octane* and *Highmark* Do Not Alter the Test or Standard of Review for Objective Willfulness

Further, contrary to Petitioner's argument, Pet. 20-21, 34-36, *Octane* and *Highmark* do not change the objective prong or standard of review for the objective prong of willful infringement as announced in *Bard Peripheral Vascular, Inc. v. W.L. Gore & Associates, Inc.*, 682 F.3d 1003 (Fed. Cir. 2012). *Octane* and *Highmark* addressed, respectively, the proper test and standard of review for awarding attorney's fees for exceptional cases under § 285, not enhanced damages under § 284. Sections 285 and 284 are different statutory provisions, and changing the analysis and standard of review for one should not dictate the analysis or standard of review for the other. Whereas § 285 attorney's fees are compensatory, § 284 enhanced damages are punitive. *Compare Knorr-Bremse Systeme Fuer Nutzfahrzeuge GmbH v. Dana Corp.*, 383 F.3d 1337, 1347 (Fed. Cir. 2004) (en banc) ("Attorney fees are compensatory . . . ."), *with Root v. Ry. Co.*, 105 U.S. 189, 196 (1881) ("[T]he Patent Act of 1836 confined the jury to the assessment of actual damages, leaving it to the discretion of the court to inflict punitive damages to the extent of trebling the verdict."), *Exxon Shipping Co. v. Baker*, 554 U.S. 471, 507 (2008) (listing 35 U.S.C. § 284 among punitive-damages statutes), *and Fla. Prepaid Postsecondary Educ. Expense Bd. v. Coll. Sav. Bank*, 527 U.S. 627, 648 n.11 (1999) ("Under the Patent

Remedy Act, States are subject to all the remedies available to plaintiffs in infringement actions, which include punitive damages and attorney's fees, see 35 U.S.C. §§ 284, 285 . . . ."). This Court in *Octane* emphasized that compensatory attorney's fees may be awarded for merely "unreasonable" litigation conduct. *Octane*, 134 S. Ct. at 1755-56. For punitive enhanced damages under § 284, however, unreasonable conduct is not enough since, as discussed above, this Court has repeatedly recognized that enhanced damages are only allowed for willful infringement.

As this Court has explained, willfulness is synonymous with "actions in 'reckless disregard' of the law" and requires "conduct violating an objective standard." *Safeco*, 551 U.S. at 57, 68-69; *Seagate*, 497 F.3d at 1371 (citing *Safeco* and noting that willfulness requires "that the infringer acted despite an objectively high likelihood that its actions constituted infringement of a valid patent"). Because *Safeco* imposes an objective standard for willful behavior, and *Safeco* is a case that was neither expressly nor implicitly overruled by *Octane* or *Highmark*, the totality-of-the-circumstances test that this Court articulated in *Octane* (which eliminated the stand-alone objective test for § 285 attorney's fees) does not apply to § 284 enhancement analyses. Moreover, *Highmark*'s instruction to review § 285 attorney's fees only for an abuse of discretion does not implicate the standard of review under § 284 because *Highmark*'s holding was predicated on the changed exceptional-case test in

*Octane*, which no longer includes a stand-alone objective test. *Highmark*, 134 S. Ct. at 1748 (explaining that because, under *Octane*, "the determination whether a case is 'exceptional' under § 285 is a matter of discretion," it follows that "the exceptional-case determination is to be reviewed only for abuse of discretion").

Subjective considerations have no place in the objective prong, contrary to Petitioner's assertions. Pet. 28-31. The objective prong considers the objective likelihood that a party infringed a valid patent; it essentially assesses a party's defenses to infringement and invalidity. *See Safeco*, 551 U.S. at 69 ("It is [a] high risk of harm, objectively assessed, that is the essence of recklessness at common law."); *Seagate*, 497 F.3d at 1371. But neither defense implicates an infringer's state of mind. Infringement asks whether an accused product includes each element of a patent's claims. And copying "is of no import on the question of whether the claims of an issued patent are infringed." *Allen Eng'g Corp. v. Bartell Indus., Inc.*, 299 F.3d 1336, 1351 (Fed. Cir. 2002); *see also Warner-Jenkinson Co. v. Hilton Davis Chem. Co.*, 520 U.S. 17, 35-36 (1997) (holding that "intent plays no role in the application of the doctrine of equivalents"). Similarly, invalidity does not turn on an infringer's state of mind. While copying in the market (including the alleged infringer) is a secondary consideration of nonobviousness, an infringer's copying holds no more weight than any other competitor's acts. *See, e.g., Geo. M. Martin Co. v. Alliance Mach. Sys. Int'l LLC*,

618 F.3d 1294, 1305 (Fed. Cir. 2010) ("[A] showing of copying is only equivocal evidence of non-obviousness in the absence of more compelling objective indicia of other secondary considerations." (citation omitted)). Thus, Petitioner's suggestion that an objective risk of harm should include a party's subjective intent has no basis.

Petitioner's proposed replacement of the current test also fails. Pet. 32-34. Petitioner suggests that the factors announced in *Read*, 970 F.2d at 826, could serve as a proper test for willfulness. Pet. 32-34. But *Read* does not provide the test for willfulness; *Read* provides instead a test for whether to enhance damages after willfulness is found. *i4i Ltd. P'ship v. Microsoft Corp.*, 598 F.3d 831, 859 (Fed. Cir. 2010), *aff'd*, 131 S. Ct. 2238 (2011) ("The test for willfulness is distinct and separate from the factors guiding a district court's discretion regarding enhanced damages.") (comparing *Seagate*, 497 F.3d at 1371, with *Read*, 970 F.2d at 826-27).

### 4. Appellate Courts Properly Review De Novo a Party's Objective Risk of Harm

The Federal Circuit's de novo review of the objective prong is supported by the law. The objective prong is not purely a question of law or fact. *Bard*, 682 F.3d at 1006-08. When an "issue falls somewhere between a pristine legal standard and a simple historical fact, the fact/law distinction at times has turned on a determination that, as a

matter of the sound administration of justice, one judicial actor is better positioned than another to decide the issue in question." *Miller v. Fenton*, 474 U.S. 104, 114 (1985).

Huge punitive awards deserve appellate scrutiny. As this Court noted in *Pierce*, when a district court's disposition of an issue has substantial monetary consequences, that issue should be "reviewed more intensively." *Pierce v. Underwood*, 487 U.S. 552, 563 (1988). Enhanced damages cases "frequently involve extraordinarily large awards." *Highmark, Inc. v. Allcare Health Mgmt. Sys., Inc.*, 701 F.3d 1351, 1355 (Fed. Cir. 2012) (Dyk, J., concurring). Some awards in patent cases have topped one billion dollars because of punitive damages. *See, e.g.*, Final Judgment, *Carnegie Mellon Univ. v. Marvell Tech. Grp., Ltd.*, No. 2:09-cv-00290 (W.D. Pa. May 7, 2014), ECF No. 948 (awarding plaintiffs over 1.2 billion dollars). Indeed, one hundred forty million dollars hangs in the balance in this case. Massive punitive verdicts like these deserve close review by an appellate court.

Petitioner reasons that because this Court determined that "the district court is better positioned to decide whether a case is exceptional because it lives with the case over a prolonged period of time," this Court should hold the same for the objective prong of willfulness. Pet. 18 (quoting *Highmark*, 134 S. Ct. at 1748-49). But this conclusion does not necessarily follow. Unlike exceptional-case determinations, which focus on the

totality of the circumstances (including conduct during proceedings in the trial court), the objective prong focuses on whether a particular defense is objectively reasonable. Compared to district court judges who might preside over patent cases rarely or occasionally, Federal Circuit judges are better positioned to determine if a defense is objectively reasonable.

In fact, the choice of district court can tremendously affect a willfulness outcome. One scholar found that the outcome for a willfulness determination varies "from a high of over 50% in the Eastern District of Texas (52.3%) to approximately 27% in the District of Minnesota." Christopher B. Seaman, *Willful Patent Infringement and Enhanced Damages After In re Seagate: An Empirical Study*, 97 Iowa L. Rev. 417, 451 (2012).

De novo appellate review of the objective prong provides consistent application of willfulness standards and precedents. Consistent review prevents one or two particularly favorable courts from becoming plaintiffs' preferred venues. Indeed, Congress specifically created the Federal Circuit to eliminate regional variances in the application of patent law. *See Markman v. Westview Instruments, Inc.*, 517 U.S. 370, 390 (1996) ("It was just for the sake of such desirable uniformity that Congress created the Court of Appeals for the Federal Circuit as an exclusive appellate court for patent cases, observing that increased uniformity would 'strengthen the United States patent system in such

a way as to foster technological growth and industrial innovation.'" (quoting H.R. Rep. No. 97-312, at 20-23 (1981))). Consistency is particularly important with punitive damages so that one can "look ahead with some ability to know what the stakes are in choosing one course of action or another." *Exxon Shipping*, 554 U.S. at 502.

### 5. The Enhanced-Damages Framework Is Consistent with the Text of § 284

The Federal Circuit's treatment of enhanced damages is consistent with the plain language of the statute, contrary to Petitioner's assertion that the willfulness requirement renders the word "may" in § 284 inoperative. Pet. 20-21. Discretion conferred by statute with the word "may" "is rarely without limits." *Indep. Fed'n of Flight Attendants v. Zipes*, 491 U.S. 754, 758 (1989); *see Martin v. Franklin Capital Corp.*, 546 U.S. 132, 139 (2005). Often, courts may exercise discretion only after certain conditions are met. The context of the statutory provision determines these conditions. So the word "may" does not automatically grant district courts unfettered power to treble damages, as Petitioner asserts. Nor does the word "may" "mean that no legal standard governs that discretion." *Martin*, 546 U.S. at 139. Instead, "may" permits district courts to award enhanced damages in some cases, but not all.

Under the current framework, "willfulness is necessary for, but does not compel, enhancement." *Halo Elecs.*, 780 F.3d at 1359 n.1 (Taranto, J.,

concurring). The framework permits a district court to enhance damages up to three times against a willful infringer, though it may choose not to enhance damages at all. That decision hinges on several factors, but is "committed to the discretion of the trial court." *Read*, 970 F.2d at 826. But against a nonwillful infringer, the district court must not treble damages. *See, e.g.*, *Seymour*, 57 U.S. at 488-89. So the district court maintains full discretion over whether to enhance damages in cases of willful infringement. *Fla. Prepaid*, 527 U.S. at 663 n.15 (Stevens, J., dissenting) ("In the case of private infringement suits, treble damages are available only 'where the infringer acted in wanton disregard of the patentee's patent rights, that is, where the infringement is willful.' 'On the other hand, a finding of willful infringement does not mandate that damages be enhanced, much less mandate treble damages.'" (citations omitted)).

Petitioner also asserts that "Congress could not have envisioned" the current willfulness framework. Pet. 21. But the legislative history of the 1946 predecessor version of § 284 demonstrates that Congress understood awarding enhanced damages would require willful infringement. As explained above, courts had long enhanced damages for willful infringement. *See* Section II.B, *supra*. And Congress used the 1946 bill to codify that practice.[1]

---

[1] "In the 1952 codification, §§ 67 and 70 of the 1946 Code were consolidated in the present § 284. The stated purpose was merely 'reorganization in language to clarify the statement of

Indeed, the legislative history of the 1946 predecessor version of § 284 shows that Congress understood full well that enhanced damages were warranted only for willful and bad-faith infringement. Representative Lanham explained that only willful infringement would merit these increased damages:

> Of course, in a case of innocent infringement, it is presumed that the court would assess no more than reasonable royalty for such time as the patent was infringed by the innocent user. . . . But if there has been a willful infringement, then the [increased] damages as set out in the bill can be collected.

Cong. Rec. H1857 (daily ed. Mar. 4, 1946). The Assistant Commissioner of Patents also testified that the bill would authorize enhanced or exemplary damages to punish willful infringement:

> I think that the rule that I have outlined and which I hope the courts will follow, would be only in those cases where there is no question about the validity of the patent and there is willful infringement with the deliberate attempt of capturing the market which has been established under the patent. I think the court would be fully

---

the statutes.'" *See Aro*, 377 U.S. at 505 n.20 (quoting H.R. Rep. No. 1923, 82d Cong., 2d Sess., at 10, 29).

> justified in assessing exemplary damages in a case of that kind.

Recovery in Patent Infringement Suits: Hearing on H.R. 5231 Before the H. Comm. on Patents, 79th Cong 9-10 (1946) (statement of Mr. Conder C. Henry, Assistant Commissioner of Patents). In short, Congress understood that § 284 codified prior precedent recognizing the discretionary power of district courts to punish willful infringers.

Petitioner also relies on legislative history from the America Invents Act for support. Pet. 21-22. Petitioner claims that, in passing the act, Congress somehow overturned or expressed opposition to the current enhanced-damages test by not amending the statute to incorporate it. *Id.* Again, however, congressional debates tell the opposite story. Senator Kyl explained that "[t]he present bill appropriately leaves patent-damages law to common law development in the courts. The present bill also makes no changes to the standard for awards of treble damages." 157 Cong. Rec. S1374 (daily ed. Mar. 8, 2011). Senator Leahy similarly reasoned that "[t]he courts have been making good progress in developing the law [of damages], and I do not believe patent reform legislation should interfere with this progress." 157 Cong. Rec. S1050 (daily ed. Mar. 1, 2011). And Senator Feinstein noted her approval of the current state of affairs: "I also believe that if the bill remains silent on damages, as the managers' amendment would do, that no harm will be done to the value of patents, which is so important for

encouraging innovation." *Id.* Thus, contrary to Petitioner's claim, this legislative history suggests Congress did not disapprove of the current enhanced-damages test.

Although Congress did not amend § 284 to refer to "willful infringement," it added a different provision that acknowledged the willfulness standard. In 35 U.S.C. § 298, Congress barred proof of willful infringement by a failure to seek advice of counsel: "The failure of an infringer to obtain the advice of counsel with respect to any allegedly infringed patent, or the failure of the infringer to present such advice to the court or jury, may not be used to prove that the accused infringer willfully infringed the patent or that the infringer intended to induce infringement of the patent." Thus, in enacting § 298, Congress tacitly endorsed the current willfulness framework.

Petitioner further argues that the enhanced-damages test conflicts with *General Motors Corp. v. Devex Corp.*, 461 U.S. 648, 653 (1983). Pet. 22-23. Petitioner explains that *General Motors* examined a separate provision of § 284—prejudgment-interest awards—and held that the text gave district courts general authority to award prejudgment interest, despite a common-law background restricting the award to exceptional circumstances. Pet. 23; *Gen. Motors*, 461 U.S. at 653. Petitioner asserts that the enhanced-damages provision of § 284 should also be interpreted to allow district courts general authority

without restricting the award to willful infringement. Pet. 21-22.

But the *General Motors* opinion undercuts Petitioner's argument. This Court in *General Motors* explained that Congress created the prejudgment-interest section of § 284 from scratch; that section of § 284 was free of precedent. The Court explained that "[t]his is not a case in which Congress has reenacted statutory language that the courts had interpreted in a particular way. In such a situation, it may well be appropriate to infer that Congress intended to adopt the established judicial interpretation." *Gen. Motors*, 461 U.S. at 653.

Unlike the prejudgment-interest section of § 284 first enacted in 1946, *id.* at 652, the enhanced-damages section carries over a century of interpretive decisions. *See* Section II.B.2, *supra.* Thus, far from mandating a plain-text reading, *General Motors* supports Respondent's position: the enhanced-damages provision owes its meaning to precedent, rather than the text alone.

Petitioner's *Octane* arguments, Pet. 23-24, fail equally. In *Octane*, this Court held that the text of § 285 permitting the award of attorney's fees in "exceptional" cases should be interpreted literally. *Octane*, 134 S. Ct. at 1755-56. Petitioner argues, therefore, that § 284 should also be interpreted literally, without a willfulness requirement. Pet. 23-24. Like the prejudgment-interest provision in *General Motors*, however, Congress created § 285 attorney's fees awards fresh in the Patent Act of

1946. *Octane*, 134 S. Ct. at 1753. Before the act, the law "did not authorize the awarding of attorney's fees." *Id.* Because Congress first added a fee-shifting provision in 1946, that act did not incorporate prior Court precedents. The Court's purely textual reading of § 285 in *Octane* thus neither mandates nor suggests a similar reading for § 284, which has an extended prior history. Despite the numerical closeness and textual parallels between these two statutory sections, therefore, their statutory and judicial histories mandate individualized treatment.

## III. CONCLUSION

For the foregoing reasons, Respondent respectfully requests that this Court deny the petition.

Respectfully submitted,

DONALD R. DUNNER
*Counsel of Record*
BENJAMIN T. SIROLLY
Finnegan, Henderson,
Farabow, Garrett &
Dunner, LLP
901 New York Avenue, NW
Washington, DC 20001-4413
(202) 408-4000

Counsel for Respondents
Zimmer, Inc. and Zimmer
Surgical, Inc.

July 24, 2015

# APPENDIX

2013-1668

# United States Court of Appeals for the Federal Circuit

STRYKER CORPORATION, STRYKER PUERTO RICO, LTD., and STRYKER SALES CORPORATION,

*Plaintiffs-Appellees,*

*v.*

ZIMMER, INC. and ZIMMER SURGICAL, INC.,

*Defendants-Appellants,*

*and*

ZIMMER ORTHOPAEDIC SURGICAL PRODUCTS,

*Defendant.*

*Appeal from the United States District Court for the Western District of Michigan in No. 10-CV-1223, Judge Robert J. Jonker.*

## REPLY TO DEFENDANTS-APPELLANTS' OPPOSITION TO PLAINTIFFS-APPELLEES' MOTION FOR LEAVE TO FILE SUPPLEMENTAL BRIEFING

GREGORY J. VOGLER
*(Principal Counsel)*
SHARON A. HWANG
DEBORAH A. LAUGHTON
CAROLINE A. TEICHNER
MCANDREWS, HELD &
MALLOY, LTD.
500 West Madison Street
Suite 3400
Chicago, Illinois 60661
(312) 775-8000

*Counsel for Appellees*
*Stryker Corporation,*
*Stryker Puerto Rico, Ltd.,*
*and Stryker Sales*
*Corporation*

## TABLE OF CONTENTS

Page

I. ARGUMENT ..... 179a

A. Zimmer's Opposition Confirms That Stryker's Motion For Leave Should Be Granted ..... 179a

B. Zimmer Fails To Overcome Stryker's Strong Showing Of The Need For Supplemental Briefing ..... 181a

C. Supplemental Briefing Is Appropriate Even Though Stryker Should Prevail Under *Bard*'s De Novo Standard of Review ..... 185a

II. CONCLUSION ..... 186a

## TABLE OF AUTHORITIES

**Page(s)**

**Cases**

*Bard Peripheral Vascular, Inc. v. W.L. Gore & Associates, Inc.*,
682 F.3d 1003 (Fed. Cir. 2012) ..... *passim*

*Highmark Inc. v. Allcare Health Management System, Inc.*,
134 S. Ct. 1744 (2014) ..... *passim*

*Highmark, Inc. v. Allcare Health Mgmt. Sys., Inc.*,
687 F.3d 1300 (Fed. Cir. 2012)
(Mayer, J., dissenting-in-part) ..... 184a, 186a

*Highmark, Inc. v. Allcare Health Mgmt. Sys., Inc.*,
701 F.3d 1351 (Fed. Cir. 2012) .... 183a, 184a, 188a

*iLOR, LLC v. Google, Inc.*,
631 F.3d 1372 (Fed. Cir. 2011) ..... 183a

*In re Seagate Technology, LLC*,
497 F.3d 1360 (Fed. Cir. 2007) (en banc) ..... 184a, 185a, 187a

*Octane Fitness, LLC v. ICON Health & Fitness, Inc.*,
134 S. Ct. 1749 (2014) ..... *passim*

*Pierce v. Underwood*
487 U.S. 552 (1988).....188a

*Professional Real Estate Investors, Inc. v. Columbia Pictures Industries, Inc.*,
508 U.S. 49 (1993).....185a, 186a, 18a7

*Safeco Insurance Co. of America v. Burr*,
551 U.S. 47 (2007).....185a

**Other Authorities**

Fed. R. App. P. 27.....180a

Plaintiffs-Appellees, Stryker Corporation, Stryker Puerto Rico, Ltd., and Stryker Sales Corporation (collectively, "Stryker"), hereby respond to Defendants-Appellants' Opposition to Stryker's Motion for Leave to File Supplemental Briefing ("Opposition") (Doc. No. 52) as follows:

## I. ARGUMENT

### A. Zimmer's Opposition Confirms That Stryker's Motion For Leave Should Be Granted

In their Opposition to Stryker's Motion for Leave to File Supplemental Briefing, Defendants-Appellants, Zimmer, Inc. and Zimmer Surgical, Inc. (collectively, "Zimmer"), fail to offer a single substantive reason why Stryker's Motion should be denied. Instead, Zimmer responds directly to the Proposed Supplemental Brief that was attached as an exhibit to Stryker's Motion, even citing to specific pages of Stryker's Proposed Supplemental Brief in its Opposition. (Doc. No. 52 at 5, 6.) By arguing the points it would raise in a supplemental brief, Zimmer has effectively confirmed that Stryker's Motion should be granted.[1] Indeed, it would be unfair for this Court to consider Zimmer's

---

[1] Zimmer filed its Opposition on June 18, 2014, six days late. (Doc. No. 52). Although Zimmer moved for a one-week extension of time (Doc. No. 49), this Court never ruled on that motion. Zimmer simply granted itself an extension of time.

substantive arguments on the merits without also considering the arguments raised in Stryker's Proposed Supplemental Brief.

Zimmer complains that, by attaching its Proposed Supplemental Brief as an exhibit to its Motion, Stryker somehow violated Federal Rule of Appellate Procedure 27's proscription that "[a] separate brief supporting or responding to a motion must not be filed." Fed. R. App. P. 27(a)(2)(C)(i) (emphasis added). However, the Proposed Supplemental Brief, which the Clerk's office instructed Stryker to include as an attachment to its Motion, is not a "separate brief supporting or responding to" Stryker's Motion for Leave. Stryker has not yet filed its supplemental brief but has merely proffered a Proposed Supplemental Brief to be filed when and if the Court grants its Motion. Accordingly, Stryker is not attempting to file additional substantive briefing without the Court's permission, but rather is doing exactly the opposite by affirmatively seeking the Court's permission to file supplemental briefing. And, contrary to Zimmer's representations, there is simply no rule barring a party from filing both a Rule 28(j) letter and a motion for leave to file supplemental briefing, as Stryker has done in this appeal. (Doc. No. 52 at 2-3.)

### B. Zimmer Fails To Overcome Stryker's Strong Showing Of The Need For Supplemental Briefing

Stryker's Motion provides compelling reasons why this Court's de novo standard of review for objective willfulness, as set forth in *Bard Peripheral Vascular, Inc. v. W.L. Gore & Associates, Inc.*, 682 F.3d 1003, 1006-07 (Fed. Cir. 2012), cannot stand in light of the Supreme Court's decisions in *Highmark Inc. v. Allcare Health Management System, Inc.*, 134 S. Ct. 1744 (2014) ("*Highmark*") and *Octane Fitness, LLC v. ICON Health & Fitness, Inc.*, 134 S. Ct. 1749 (2014) ("*Octane*"), and why the parties should be allowed to file supplemental briefing on this issue. (Doc. No. 48.) In its Opposition, Zimmer fails to rebut these reasons and offers only a superficial analysis of the Supreme Court's decisions.

For instance, Zimmer states the obvious point that *Highmark* and *Octane* expressly pertain only to § 285 and attorneys' fees, not to § 284 and enhanced damages. (Doc. No. 52 at 3.) Stryker has never argued that these decisions directly overrule this Court's willfulness framework. Rather, Stryker maintains that *Highmark* and *Octane* beg the question of whether this Court's willfulness framework—particularly de novo review of the objective prong—is correct, an issue that should be explored more fully in supplemental briefing.

Moreover, Zimmer fails to adequately address the fact that this Court has long treated the analyses under § 285 and § 284 the same, instead summarily dismissing this key point in a footnote. (*Id.* at 5 n.1);

*see Highmark, Inc. v. Allcare Health Mgmt. Sys., Inc.*, 701 F.3d 1351, 1353 (Fed. Cir. 2012); *iLOR, LLC v. Google, Inc.*, 631 F.3d 1372, 1377 (Fed. Cir. 2011). Zimmer also fails to even acknowledge that several judges of this Court have outspokenly declared that *Bard* was wrongly decided as to § 284. *See, e.g., Highmark*, 701 F.3d at 1357 n.1 (Moore, J., joined by Rader, C.J., O'Malley, J., Reyna, J., Wallach, J., dissenting); *id.* at 1367 n.5 (Reyna, J., joined by Moore, J., O'Malley, J., Wallach, J., dissenting); *Highmark, Inc. v. Allcare Health Mgmt. Sys., Inc.*, 687 F.3d 1300, 1320-21 (Fed. Cir. 2012) (Mayer, J., dissenting-in-part). Both of these points underscore the need for further briefing in this appeal to address the impact of *Highmark* and *Octane* on the standard of review for willfulness.

Zimmer further offers a disjointed explanation as to why the willfulness inquiry cannot be divorced from an objective assessment of recklessness, but that argument is beside the point. (Doc. No. 52 at 3-5.) Stryker does not challenge on appeal the correctness of the two-prong, objective/subjective inquiry for willfulness set forth in *In re Seagate Technology, LLC*, 497 F.3d 1360, 1371 (Fed. Cir. 2007) (en banc) because Stryker prevailed on willfulness below even under the stringent standard set forth therein. Rather, Stryker submits that de novo review of the objective prong of willfulness under *Bard* would be improper. Therefore, Zimmer's citation to the Supreme Court's decision in *Safeco Insurance Co. of America v. Burr*, 551 U.S. 47 (2007) is completely inapposite to the issue for which Stryker seeks leave to file supplemental briefing—namely, the appropriate standard of review for the

objective prong of willfulness within the confines of the *Seagate* test.

Zimmer's discussion of *Professional Real Estate Investors, Inc. v. Columbia Pictures Industries, Inc.*, 508 U.S. 49 (1993) ("*PRE*") also fails to bolster its position. (Doc. No. 52 at 5-6.) The following critical points are not in dispute: this Court relied on *PRE* to justify de novo review of objective willfulness in *Bard*,[2] *see* 682 F.3d at 1007-08; this Court also relied on *PRE* in extending *Bard*'s de novo review to the objective prong of the exceptional-case test, *see Highmark*, 687 F.3d at 1310 n.1; and, in *Octane*, the Supreme Court wholly rejected the application of *PRE* to the exceptional-case test, *see* 134 S. Ct. at 1757-58. At a minimum, *Octane* raises the question of whether *PRE* can still be used to support *Bard* as applied to willfulness now that it has been flatly rejected in the context of exceptional case. The parties should have the opportunity to address this point in supplemental briefing. Moreover, the fact that *Seagate* does not mention *PRE* is inconsequential, both because Stryker does not challenge *Seagate* and because *Seagate* says nothing about the appropriate

---

[2] Zimmer attempts to downplay the Court's reliance on *PRE* in *Bard* by stating that "*PRE* was not the basis for the Court's holding." (Doc. No. 52 at 6 (emphasis added).) Nevertheless, Zimmer acknowledges that the *Bard* court "noted that its holding '[was] consistent with similar holdings in other parallel areas of the law,' including *PRE*'s sham litigation exception . . . " (*Id.*) Even if *PRE* was not the exclusive basis for the Court's holding in *Bard*, *PRE* unquestionably lent support to the holding.

standard of review for willfulness anyway. *See* 497 F.3d at 1371 ("We leave it to future cases to further develop the application of this [two-prong willfulness] standard.").

Zimmer further reinforces Stryker's position by citing *Bard*'s discussion of the proper allocation of decisionmaking among judicial actors. (*See* Doc. No. 52 at 6-7.) In *Bard*, this Court concluded that judges, rather than juries, are best suited to make objective willfulness determinations, but said nothing about the relative merits of the district court versus the appellate court. *See Bard*, 682 F.3d at 1006-07. In contrast, in *Highmark*, the Supreme Court expressly rejected the notion that this Court is more adept at making exceptional-case findings than district courts. *See* 134 S. Ct. at 1748-49; *see also Highmark*, 701 F.3d at 1356. The Supreme Court explained that the district court is "'better positioned'" because it "lives with the case over a prolonged period of time," thereby justifying deferential review of the district court's exceptional-case findings. *Highmark*, 134 S. Ct. at 1748-49 (quoting *Pierce v. Underwood*, 487 U.S. 552, 559-60 (1988)). The Supreme Court's reasoning applies equally well to willfulness, given that both the exceptional-case inquiry and the objective-willfulness inquiry turn on the strength and reasonableness of a party's litigating position as developed over the entire course of a trial. This Court should allow the parties to file supplemental briefing to address whether decisionmaking for willfulness should be allocated more heavily toward the district judge through deferential review, as it is now for exceptional case.

### C. Supplemental Briefing Is Appropriate Even Though Stryker Should Prevail Under *Bard*'s De Novo Standard of Review

Although Stryker should prevail on the merits regardless of the standard used to review the district court's objective willfulness determination,[3] this appeal presents a unique opportunity for the Court to revisit *Bard* now that the Supreme Court has provided relevant guidance on a parallel issue in *Highmark* and *Octane*. Many judges of this Court already oppose *Bard*'s de novo standard of review. *See supra* at 4. And the Supreme Court has now ruled that deferential review is appropriate for inquiries like objective willfulness that implicate the district court's intimate familiarity with the parties' litigating positions. *See Highmark*, 134 S. Ct. at 1748-49. Accordingly, this Court should allow the parties to file supplemental briefing on this issue to promote greater clarity moving forward.

---

[3] Zimmer has not appealed from the jury's and district court's findings of subjective willfulness. (Doc. No. 18 at 65-68).

## II. CONCLUSION

For the reasons set forth above and in Stryker's Motion for Leave to File Supplemental Briefing (Doc. No. 48), Stryker respectfully requests that the Court grant Stryker's Motion for Leave to File Supplemental Briefing.

Dated: June 25, 2014 Respectfully submitted,

/s/ Gregory J. Vogler

Gregory J. Vogler
Sharon A. Hwang
Deborah A. Laughton
Caroline A. Teichner
MCANDREWS, HELD & MALLOY, LTD
500 West Madison Street, Suite 3400
Chicago, Illinois 60661
(312) 775-8000

Counsel for Plaintiffs-Appellees,
Stryker Corporation,
Stryker Puerto Rico, Ltd., and
Stryker Sales Corporation

## CERTIFICATE OF INTEREST

Pursuant to Rule 26.1 of the Federal Rules of Appellate Procedure and Federal Circuit Rule 47.4, Stryker makes the following disclosures:

1. The full name of every party or amicus represented by me is:

Stryker Corporation; Stryker Puerto Rico, Ltd.; and Stryker Sales Corporation.

2. The name of the real party in interest (if the party named in the caption is not the real party in interest) represented by me is:

None.

3. All parent corporations and any publicly held companies that own 10 percent or more of the stock of the party or amicus curiae represented by me are:

None.

4. The names of all law firms and the partners and associates that have appeared for the party or amicus now represented by me in the trial court or agency or are now expected to appear in this court are:

**McAndrews, Held & Malloy, Ltd.**: Gregory J. Vogler, Sharon A. Hwang, Deborah A. Laughton, Laura M. Personick, Justin J. Paul, and Caroline A. Teichner.

**Miller Johnson**: David J. Gass and D. Andrew Portinga.

Dated: June 25, 2014 /s/ Gregory J. Vogler
Gregory J. Vogler

Counsel for Plaintiffs-Appellees

**CERTIFICATE OF SERVICE**

I hereby certify that the foregoing REPLY TO DEFENDANTS-APPELLANTS' OPPOSITION TO PLAINTIFFS-APPELLEES' MOTION FOR LEAVE TO FILE SUPPLEMENTAL BRIEFING was electronically filed using the Court's CM/ECF filing system. Counsel registered with the CM/ECF system were served by operation of the Court's CM/ECF system per Fed. R. App. P. 25 on June 25, 2014.

Donald R. Dunner
Kara F. Stoll
Garth D. Baer
Benjamin T. Sirolly
FINNEGAN, HENDERSON, FARABOW, GARRETT & DUNNER, LLP
901 New York Avenue, NW
Washington, DC 20001-4413
don.dunner@finnegan.com
kara.stoll@finnegan.com
garth.baer@finnegan.com
ben.sirolly@finnegan.com

/s/ Gregory J. Vogler

No. 14-1520

IN THE

# Supreme Court of the United States

STRYKER CORPORATION, STRYKER PUERTO RICO, LTD., AND STRYKER SALES CORPORATION,
*Petitioners*,

v.

ZIMMER, INC. AND ZIMMER SURGICAL, INC.,
*Respondents*.

**On Petition for a Writ of Certiorari to the United States Court of Appeals for the Federal Circuit**

## REPLY TO BRIEF IN OPPOSITION

SHARON A. HWANG
*Counsel of Record*
DEBORAH A. LAUGHTON
STEPHANIE F. SAMZ
CAROLINE A. TEICHNER
McAndrews, Held & Malloy, Ltd.
500 West Madison Street, Suite 3400
Chicago, Illinois 60661
(312) 775-8000
shwang@mcandrews-ip.com

*Counsel for Petitioners*,
Stryker Corp., Stryker Puerto Rico, Ltd., and Stryker Sales Corp.

## RULE 29.6 DISCLOSURE STATEMENT

Petitioner Stryker Corporation has no parent corporation, and no publicly held company owns ten percent or more of its stock.

Petitioner Stryker Puerto Rico, Ltd. is an indirect wholly-owned subsidiary of Stryker Corporation, which is a publicly held company that owns ten percent or more of Stryker Puerto Rico, Ltd.'s stock.

Petitioner Stryker Sales Corporation is a wholly-owned subsidiary of Stryker Corporation, which is a publicly held company that owns ten percent or more of Stryker Sales Corporation's stock.

## TABLE OF CONTENTS

RULE 29.6 DISCLOSURE STATEMENT ..... i

TABLE OF AUTHORITIES ..... iii

SUMMARY OF REPLY ..... 1

I. THIS CASE IS A PROPER VEHICLE FOR SUPREME COURT REVIEW OF THE IMPORTANT ISSUES RAISED IN STRYKER'S PETITION. ..... 3

A. Stryker Properly Preserved All Issues Below. ..... 3

B. The *Seagate* Framework Is Mature And Ripe For Review ..... 8

II. ZIMMER'S ARGUMENTS ON THE MERITS ARE UNAVAILING ..... 11

A. Supreme Court Precedent Does Not Support *Seagate*'s Restrictions On Enhanced Damages. ..... 11

B. *Octane Fitness* and *Highmark* Compel Changes To The Federal Circuit's Enhanced Damages Framework. ..... 12

CONCLUSION ..... 13

## TABLE OF AUTHORITIES

**Cases**

*Adickes v. S.H. Kress & Co.*,
398 U.S. 144 (1970) ..... 7

*Arizona v. Evans*,
514 U.S. 1 (1995) ..... 10

*Aro Manufacturing Co. v. Convertible Top Replacement Co.*,
377 U.S. 476 (1964) ..... 11

*Bard Peripheral Vascular, Inc. v. W.L. Gore & Associates, Inc.*,
682 F.3d 1003 (Fed. Cir. 2012) ..... 2

*Bard Peripheral Vascular, Inc. v. W.L. Gore & Associates, Inc.*,
No. 2014-1114 (Fed. Cir. Apr. 8, 2015) ..... 8

*Carnegie Mellon University v. Marvell Technology Group, Ltd.*,
No. 2014-1492, 2015 WL 4639309 (Fed. Cir. Aug. 4, 2015) ..... 9

*DiGiuseppe v. Lawler*,
269 S.W.3d 588 (Tex. 2008) ..... 7

*Dowling v. United States*,
473 U.S. 207 (1985) ..... 11

*George E. Warren Corp. v. United States*,
341 F.3d 1348 (Fed. Cir. 2003) ..... 4

*Global Traffic Technologies LLC v. Morgan*,
Nos. 2014-1537, 2014-1566, 2015 WL 3513416
(Fed. Cir. June 4, 2015) ..... 9

*Haas v. Peake*,
544 F.3d 1306 (Fed. Cir. 2008) ..... 5

*Halo Electronics, Inc. v. Pulse Electronics, Inc.*,
769 F.3d 1371 (Fed. Cir. 2014) ..... 8

*Halo Electronics, Inc. v. Pulse Electronics, Inc.*,
780 F.3d 1357 (Fed. Cir. 2015) ..... 8, 13

*Highmark Inc. v. Allcare Health Management System, Inc.*,
134 S. Ct. 1744 (2014) ..... 2, 5, 6, 12

*iLOR, LLC v. Google, Inc.*,
631 F.3d 1372 (Fed. Cir. 2011) ..... 13

*In re Seagate Technology, LLC*,
497 F.3d 1360 (Fed. Cir. 2007) .....passim

*Independence Park Apartments v. United States*,
449 F.3d 1235 (Fed. Cir. 2006) ..... 7

*Kam-Almaz v. United States*,
682 F.3d 1364 (Fed. Cir. 2012) ..... 4

*Knorr-Bremse Systeme Fuer Nutzfahrzeuge GmbH v. Dana Corp.*,
383 F.3d 1337 (Fed. Cir. 2004) ..... 12

*Laitram Corp. v. NEC Corp.*,
115 F.3d 947 (Fed. Cir. 1997) ..... 5

*Meyer v. Holley*,
537 U.S. 280 (2003) ..... 7

*National Presto Industries, Inc. v. West Bend Co.*,
76 F.3d 1185 (Fed. Cir. 1996) ..... 12

*NICOR Exploration Co. v. Federal Energy Regulatory Commission*,
50 F.3d 1341 (5th Cir. 1995) ..... 7

*Octane Fitness, LLC v. ICON Health & Fitness, Inc.*,
134 S. Ct. 1749 (2014) ..... 2, 5, 6, 12

*Pennsylvania Department of Corrections v. Yeskey*,
524 U.S. 206 (1998) ..... 7

*Safeco Insurance Co. of America v. Burr*,
551 U.S. 47 (2007) ..... 10

*Seymour v. McCormick*,
57 U.S. 480 (1853) ..... 11

*Stermel v. Workers' Compensation Appeal Board*,
103 A.3d 876 (Pa. Commw. Ct. 2014) ..... 7

**Statutes**

35 U.S.C. § 284.....passim

35 U.S.C. § 285..... 2, 12, 13

## SUMMARY OF REPLY

As recognized by several *amici*, Stryker's petition raises important questions of law involving the growing tangle of restrictions that the Federal Circuit has imposed upon the statute authorizing enhanced damages awards for patent infringement. *See* 35 U.S.C. § 284. The increasingly stringent requirements to prove "objective willfulness" have caused enhanced damages awards to be overturned on appeal even in core cases like this one—cases involving blatant and knowing copying by direct competitors. These rigid restrictions have no foundation in the text of the statute, contravene this Court's most recent pronouncements about parallel provisions of the Patent Act, and undermine fundamental policies of patent law. Notwithstanding the various assertions made by Zimmer, the adjudged infringer in this case, Stryker's petition presents a clean opportunity for review of these important issues.

As an initial matter, Stryker, the Plaintiff-Appellee below, properly preserved its challenge to the grafting of willfulness onto § 284 and the correctness of the two-part test for willfulness set forth in *In re Seagate Technology, LLC*, 497 F.3d 1360, 1371 (Fed. Cir. 2007), by raising those issues below in its petition for rehearing *en banc*. As the prevailing party prior to the Federal Circuit's reversal on willfulness, there was simply no reason for Stryker to raise those issues any sooner, particularly before a three-judge appellate panel that

would have had no power to overturn circuit precedent in the first place. Zimmer's waiver argument relies on a single statement twisted and taken out of context from one of Stryker's filings that itself contains a caveat refuting Zimmer's argument.

It has been eight years since the Federal Circuit's *Seagate* decision formally grafted a "willfulness" requirement onto § 284 in the form of a rigid, two-part test of which the dispositive, threshold criterion (the "objective prong") has nothing to do with willfulness as traditionally understood. *See id.* at 1368–71. Since then, the *Seagate* framework has become ever more stringent as a steady flow of rulings—such as the decision to review the objective prong of the *Seagate* test *de novo*—has carried patent remedies even further from their statutory moorings. *See Bard Peripheral Vascular, Inc. v. W.L. Gore & Assocs., Inc.*, 682 F.3d 1003, 1006–07 (Fed. Cir. 2012). Zimmer's protests notwithstanding, the *Seagate* framework has sufficiently matured over the past eight years, and there is no need for further "percolation" below, especially where the Federal Circuit is unlikely to reject a framework it initiated just eight years ago. Postponing review in this Court would only delay much-needed corrections to the Federal Circuit's § 284 jurisprudence, which runs contrary to this Court's earlier precedents involving § 284 and its very recent guidance regarding 35 U.S.C. § 285 in *Octane Fitness, LLC v. ICON Health & Fitness, Inc.*, 134 S. Ct. 1749 (2014), and *Highmark Inc. v. Allcare Health Management System, Inc.*, 134 S. Ct. 1744 (2014).

## I. THIS CASE IS A PROPER VEHICLE FOR SUPREME COURT REVIEW OF THE IMPORTANT ISSUES RAISED IN STRYKER'S PETITION.

### A. Stryker Properly Preserved All Issues Below.

In the face of the clear tension between the ever-growing barriers to enhanced damages erected by the Federal Circuit, on the one hand, and both the text of the Patent Act and this Court's most recent interpretations of it, on the other, Zimmer attempts to create a vehicle problem by suggesting that Stryker waived any right to challenge those barriers. Zimmer's claim is not supported by the record and is based on a misunderstanding of basic procedural principles.

There is no waiver. Stryker squarely raised all of the issues now before this Court in its petition to the Federal Circuit for rehearing *en banc*. *See* Stryker Pet. for Reh'g *En Banc* at 19, *Stryker Corp. v. Zimmer, Inc.*, No. 2013-1668 (Fed. Cir. Jan. 20, 2015), Dkt. No. 72 [hereinafter Pet. for Reh'g]. As the sole support for its waiver claim, Zimmer relies on a single phrase cherry-picked from the record, which neither means what Zimmer says it means nor has the effect Zimmer says it has.

Zimmer faults Stryker for failing to challenge the *Seagate* framework in its initial appellee briefing

to the Federal Circuit in Zimmer's appeal, but Zimmer's argument misunderstands the basic structure of appellate litigation. For a start, it would not have been possible for the original appellate panel to overrule the *Seagate* framework. *See Kam-Almaz v. United States*, 682 F.3d 1364, 1371 (Fed. Cir. 2012) ("Of course, a panel of this court is powerless to overrule a precedent."); *George E. Warren Corp. v. United States*, 341 F.3d 1348, 1351–52 (Fed. Cir. 2003) ("[T]o overrule a precedent, the court must rule en banc.").

More importantly, an appellee stands in very different footing from an appellant. As the Federal Circuit itself has explained:

> Appellees do not select the issues to be appealed. Appellees, in addition, are at a procedural disadvantage in appeals because they can neither file reply briefs nor choose when to appeal. The policies [of] avoidance of piecemeal litigation and conservation of judicial resources [ ] are less implicated when the party against whom waiver is asserted is the appellee. Indeed, these same policies may counsel for *not* forcing an appellee to raise all possible issues in an appeal.

*Laitram Corp. v. NEC Corp.*, 115 F.3d 947, 954 (Fed. Cir. 1997) (emphasis in original).[1] Stryker preserved its challenge to the *Seagate* framework by raising those issues at its first opportunity to do so after a determination adverse to it had been made, in its *en banc* petition.

Moreover, it is important to understand the context of the material Zimmer cites in support of its waiver claim. On April 29, 2014, after Stryker and Zimmer had completed their original briefing to the Federal Circuit but well before oral argument, this Court decided *Octane Fitness* and *Highmark*. Shortly thereafter, Stryker filed a motion for leave to submit supplemental briefing on the implications of those cases on the level of deference in review of willfulness findings. Having prevailed at trial even under *Seagate*'s rigid test, Stryker at that point simply sought to preserve the status quo on appeal and had no reason to challenge the Federal Circuit's interpretation of § 284 or the *Seagate* framework. The standard of review was a unique matter, however, because it established the lens through which the status quo would be reviewed. Ultimately, the Federal Circuit denied Stryker's motion and declined to consider Stryker's proffered supplemental briefing.

---

[1] For this reason, Zimmer's reliance on cases finding waiver or forfeiture by appellants, *see, e.g.*, *Haas v. Peake*, 544 F.3d 1306, 1308 (Fed. Cir. 2008), is misplaced.

Zimmer now alleges waiver based on a single sentence, taken out of context, in Stryker's reply brief in support of its motion for leave to file supplemental briefing. There, Stryker stated that it "[did] not challenge on appeal the correctness of the two-prong, objective/subjective inquiry for willfulness set forth in [*Seagate*] *because Stryker prevailed on willfulness below even under the stringent standard set forth therein*." App. 182a (emphasis added). Read in its entirety, this statement merely clarified that Stryker was seeking in its supplemental brief to impress upon the court the importance of deference to the trial court's findings as the court proceeded with its consideration of Zimmer's appeal.

Stryker's statement quite obviously was something other than the blanket disclaimer Zimmer claims, given that (a) any challenge to *Seagate* would have required overruling binding circuit precedent; (b) Stryker was merely defending the judgment below; and (c) the statement was made in a motion seeking leave to file supplemental briefing on the limited subject of *Octane Fitness* and *Highmark* and their effect on appellate deference.

Much changed in the time since Stryker made this statement. Although the Federal Circuit affirmed on liability and damages, it reversed on willfulness and stripped Stryker of its enhanced damages award, prompting Stryker to file a petition for rehearing *en banc* at the Federal Circuit and its present petition before this Court. Once Stryker stood in an adverse posture in relation to the judgment, it challenged aspects of the Federal

Circuit's framework that it previously had no reason to oppose, including the Federal Circuit's interpretation of § 284 and the impropriety of the *Seagate* test. *See* Pet. for Reh'g at 19.

It is well understood that waiver does not apply when a prevailing party's fortune flips on appeal in this way merely because the party elected not to assert every possible ground for affirmance in the first instance. *See, e.g.*, *Independence Park Apartments v. United States*, 449 F.3d 1235, 1240 (Fed. Cir. 2006); *Stermel v. Workers' Comp. Appeal Bd.*, 103 A.3d 876, 882–83 (Pa. Commw. Ct. 2014); *DiGiuseppe v. Lawler*, 269 S.W.3d 588, 603 (Tex. 2008); *NICOR Exploration Co. v. Fed. Energy Regulatory Comm'n*, 50 F.3d 1341, 1347 (5th Cir. 1995). It would be especially unfair to penalize Stryker now for *not challenging existing law in its appellee briefing* to the Federal Circuit when it prevailed under that law at the district court. Moreover, this Court did not decide *Octane Fitness* and *Highmark* until after all briefing was complete, so Stryker could not possibly have advanced those arguments in its initial filing.[2]

---

[2] For all these reasons, the decisions of this Court cited by Zimmer are wholly inapposite. Those cases stand for the proposition that this Court will not consider issues that have been "*neither raised before* nor considered by the Court of Appeals." *Adickes v. S.H. Kress & Co.*, 398 U.S. 144, 147 n.2 (1970) (emphasis added); *see also Pa. Dep't of Corr. v. Yeskey*, 524 U.S. 206, 212–13 (1998) (quoting *Adickes*); *Meyer v. Holley*, 537 U.S. 280, 291–92 (2003). Here, of course, Stryker *did* raise the very same issues involving grafting and *Seagate* in its

### B. The *Seagate* Framework Is Mature And Ripe For Review.

In *Seagate*, the Federal Circuit "le[ft] it to future cases to further develop the application of [the] standard" articulated therein. 497 F.3d at 1371. In the eight years since *Seagate* was decided, those "future cases" have morphed the Federal Circuit's framework into a rigid, stringent test that has significantly undercut the deterrent effect of enhanced damages and flouted the plain language of § 284. Now, "willfulness" is less a measure of bad-faith infringement, and more an assessment of an infringer's (or his counsel's) ability to concoct objectively reasonable *post-hoc* defenses. *See, e.g.*, App. 21a-24a; *Halo Elecs., Inc. v. Pulse Elecs., Inc.*, 769 F.3d 1371, 1381–83 (Fed. Cir. 2014).

In any event, Stryker's petition presents pure questions of law and statutory interpretation that are ripe for review without further development below. The Federal Circuit has failed to act upon at least three recent opportunities to address these issues *en banc*. *See* App. 1a-2a (denying petition for rehearing *en banc*); *see also Bard Peripheral Vascular, Inc. v. W.L. Gore & Assocs., Inc.*, No. 2014-1114 (Fed. Cir. Apr. 8, 2015) (same); *Halo Elecs., Inc. v. Pulse Elecs., Inc.*, 780 F.3d 1357, 1358 (Fed. Cir. 2015) (same). Indeed, the Federal Circuit has

---

petition for rehearing *en banc* before the Federal Circuit, as Zimmer itself acknowledges. *See* Opp'n Br. at 6.

recently dug its heels in and applied its willfulness framework *more* rigidly. For example, in *Global Traffic Technologies LLC v. Morgan*, Nos. 2014-1537, 2014-1566, 2015 WL 3513416, at *7–8 (Fed. Cir. June 4, 2015), the Federal Circuit reversed the district court's enhanced damages award under § 284 after finding that the defendants presented objectively reasonable defenses below, even while acknowledging that those defenses had been devised solely for litigation. *Global Traffic* is another case, like this one, where the Federal Circuit's flawed willfulness framework allowed a knowing infringer to escape enhanced damages simply by hiring skilled counsel to devise *post-hoc* defenses. *See also Carnegie Mellon Univ. v. Marvell Tech. Grp., Ltd.*, No. 2014-1492, 2015 WL 4639309, at *1, *12–15 (Fed. Cir. Aug. 4, 2015) (reversing willfulness and enhanced damages award where defendant presented objectively reasonable litigation defense, explaining that "the governing willfulness standard . . . does not require that [the defendant] have had a reasonable defense in mind when it committed its past infringement").[3] These decisions are a marked departure from the notion that an accused party must have *actually relied* on a reasonable defense at the time of infringement to

[3] Both the *Global Traffic* and *Carnegie Mellon University* decisions were authored by Federal Circuit judges who previously expressed an interest in revisiting the court's enhancement framework, casting doubt on Zimmer's suggestion that the Federal Circuit is likely to resolve the issues internally. *See* Opp'n Br. at 8–9. To the contrary, it suggests that guidance from this Court in the near term is necessary.

escape a willfulness finding. *Cf. Safeco Ins. Co. of Am. v. Burr*, 551 U.S. 47, 70 n.20 (2007).

Given the increasing stringency of the Federal Circuit's willfulness jurisprudence, it has become extremely difficult, if not impossible, for patentees to prevail on willfulness and receive enhanced damages at the district court. District courts see the writing on the wall. Consequently, the pool of cases having the procedural posture of this case is drastically shrinking. And, because the Federal Circuit has exclusive jurisdiction over patent appeals, there is no forthcoming guidance from other courts. *Cf. Ariz. v. Evans*, 514 U.S. 1, 23 n.1 (1995) (Ginsburg, J., dissenting). Zimmer presents no compelling reason to give the Federal Circuit court any more chances to resolve these issues internally.[4]

---

[4] The Federal Circuit panel below revised its original opinion by adding a footnote stating that the panel saw no need to consider the appropriate standard of appellate review in this case. *See* App. 22a n.6. Even if that cryptic statement is interpreted as an indication that the issue might be taken up in a future case, this petition challenges the grafting of willfulness onto § 284 and the underlying *Seagate* framework itself. It would make no sense to reformulate a standard of review when the underlying substantive standard is itself wrong.

## II. ZIMMER'S ARGUMENTS ON THE MERITS ARE UNAVAILING.

### A. Supreme Court Precedent Does Not Support *Seagate*'s Restrictions On Enhanced Damages.

This Court has never ruled that a finding of willfulness is required before a district court can award enhanced damages under § 284, notwithstanding Zimmer's assertions to the contrary. *See* Opp'n Br. at 16–17. The cases cited by Zimmer state only that a showing of willfulness is *sufficient* but not *necessary* to support enhanced damages. *See Seagate*, 497 F.3d at 1381 (Gajarsa, J., concurring) (noting the same and concluding that "[t]hose cases cannot be interpreted to mean that enhanced damages are limited to a finding of willfulness"); *Dowling v. United States*, 473 U.S. 207, 227 n.19 (1985) (identifying "treble damages for willful infringement" as one available remedy for patent owners); *Aro Mfg. Co. v. Convertible Top Replacement Co.*, 377 U.S. 476, 508 (1964) (explaining that a patentee "could in a case of willful or bad-faith infringement recover punitive or 'increased' damages under the statute's trebling provision"); *Seymour v. McCormick*, 57 U.S. 480, 489 (1853) (recognizing that "wanton or malicious" injury could support "vindictive or punitive damages" under the then-existing enhancement statute).

At any rate, *Seagate* and its progeny reflect a distorted concept of "willfulness." Prior to *Seagate*, willfulness was akin to culpable infringement and centered on subjective considerations. *See, e.g.*, *Knorr-Bremse Systeme Fuer Nutzfahrzeuge GmbH v. Dana Corp.*, 383 F.3d 1337, 1348 (Fed. Cir. 2004) (Dyk, J., concurring-in-part and dissenting-in-part) ("Punitive damages are awarded to punish reprehensible behavior, referred to in this context as willful infringement."); *Nat'l Presto Indus., Inc. v. W. Bend Co.*, 76 F.3d 1185, 1192–93 (Fed. Cir. 1996) ("Liability for willfulness of infringement turns on considerations of intent, state of mind, and culpability."). Under current Federal Circuit jurisprudence, "willfulness" no longer simply refers to malicious, bad-faith behavior, but instead includes a nebulous "objective" component. This Court has yet to provide guidance as to what actions constitute willful patent infringement. Accordingly, the cited cases do not refute Stryker's arguments on the merits.

### B. *Octane Fitness* and *Highmark* Compel Changes To The Federal Circuit's Enhanced Damages Framework.

The lesson from this Court's decisions in *Octane Fitness* and *Highmark* is that the broad, discretionary language of § 284 must be taken at face value, especially where the language of § 284 is even *less* constrained than that of 35 U.S.C. § 285. *Compare* § 285 ("The court *in exceptional cases* may

award reasonable attorney fees to the prevailing party." (emphasis added)), *with* § 284 ("[T]he court may increase the damages up to three times the amount found or assessed."). The Federal Circuit's existing framework for enhancement, which is the same as the now-defunct framework for awarding attorneys' fees, *see iLOR, LLC v. Google, Inc.*, 631 F.3d 1372, 1377 (Fed. Cir. 2011), simply cannot be reconciled with those decisions. Individual judges of the Federal Circuit and members of the patent bar agree. *See, e.g.*, *Halo*, 780 F.3d at 1362–64 (O'Malley, J., joined by Hughes, J., dissenting from denial of rehearing *en banc*); Nokia Br. at 12–15; Indep. Inventor Grps. Br. at 4.

The existing disparity between § 284 and § 285 is even more pronounced given that the same conduct is often considered for purposes of both exceptional case and enhanced damages. There is no principled reason why enhanced damages awards should be harder to attain or reviewed with greater scrutiny than attorneys' fee awards when premised on the same conduct, especially where § 284 features relatively *more* permissible language than § 285.

## CONCLUSION

For the foregoing reasons and the reasons articulated in Stryker's petition, the petition for a writ of certiorari should be granted.

No. 14-1520

IN THE

# Supreme Court of the United States

STRYKER CORP., ET AL.,

*Petitioners,*

v.

ZIMMER, INC., ET AL.,

*Respondents.*

---

**On Petition for Writ of Certiorari to the United States Court of Appeals for the Federal Circuit**

---

## BRIEF OF *AMICI CURIAE* INDEPENDENT INVENTOR GROUPS IN SUPPORT OF PETITIONERS

**[*Amici* Listed on Inside Cover]**

---

ANDREW S. BALUCH*
STEPHEN G. NAGY
STRAIN & STRAIN PLLC
1455 Pennsylvania Ave., N.W., Suite 400
Washington, D.C. 20004
(202) 621-1872
andrew.baluch@strainpllc.com
* *Counsel of Record* *Counsel for Amici Curiae*

## LIST OF *AMICI CURIAE*
## INDEPENDENT INVENTOR GROUPS

U.S. Inventor
Edison Nation
Inventors Digest
National Society of Inventors
Inventors Network of the Capital Area
Texas Inventors Association
Columbus Phenix City Inventors Association
Music City Inventors Group
Louis J. Foreman
Paul Morinville
James Innes

# TABLE OF CONTENTS

TABLE OF AUTHORITIES ..... ii

INTEREST OF *AMICI CURIAE* ..... 1

SUMMARY OF ARGUMENT ..... 3

ARGUMENT ..... 5

I. THE FEDERAL CIRCUIT'S TWO-PART OBJECTIVE/SUBJECTIVE TEST FOR ENHANCING DAMAGES IS CONTRARY TO STATUTE AND THIS COURT'S DECISIONS ..... 5

II. THE *HALO* AND *STRYKER* PETITIONS IMPLICATE BILLIONS OF DOLLARS OF GROSS DOMESTIC PRODUCT AND THE FUTURE OF AMERICA'S SMALL INVENTORS ..... 12

CONCLUSION ..... 15

## TABLE OF AUTHORITIES

### CASES

*Aro Mfg. Co. v. Convertible Top Replacement Co.*, 377 U.S. 476 (1964) ..... 9

*Birdsall v. Coolidge*, 93 U.S. 64 (1876) ..... 7

*Clark v. Wooster*, 119 U.S. 322 (1886) ..... 4, 7

*Day v. Woodworth*, 54 U.S. 363 (1851) ..... 4, 8

*Dean v. Mason*, 61 U.S. 198 (1858) ..... 7

*Farmer v. Brennan*, 511 U.S. 825 (1994) ..... 10

*Halo Elecs., Inc. v. Pulse Elecs., Inc.*, 780 F.3d 1357 (Fed. Cir. 2015) ..... 5, 9, 13

*In re Seagate Tech., LLC*, 497 F.3d 1360 (Fed. Cir. 2007) ..... 8, 9

*Microsoft Corp. v. i4i Ltd. P'ship*, 131 S. Ct. 2238 (2011) ..... 12

*Octane Fitness, LLC v. Icon Health and Fitness, Inc.*, 134 S. Ct. 1749 (2014) ..... 3, 4, 9

*Powell v. Home Depot U.S.A., Inc.*, 663 F.3d 1221 (Fed. Cir. 2011) ..... 14

*Radio Corp. of Am. v. Radio Eng'g Labs.*, 293 U.S. 1 (1934) ..... 12

*Rite-Hite Corp. v. Kelley Co.*, 56 F.3d 1538 (Fed. Cir. 1995) ..... 14

*Safeco Ins. Co. of Am. v. Burr*, 551 U.S. 47 (2007) ..... 11

## TABLE OF AUTHORITIES—Continued

*Saucier v. Katz*, 533 U.S. 194 (2001) ..... 11

*Seymour v. McCormick*, 57 U.S. 480 (1853) ..... 8

*Stryker Corp. v. Zimmer, Inc.*, 782 F.3d 649 (Fed. Cir. 2015) ..... 5, 10

*Teese v. Huntingdon*, 64 U.S. 2 (1860) ..... 7

*Tilghman v. Proctor*, 125 U.S. 136 (1888) ..... 6

*Topliff v. Topliff*, 145 U.S. 156 (1892) ..... 6

*Uniloc USA, Inc. v. Microsoft Corp.*, 632 F.3d 1292 (Fed. Cir. 2011) ..... 10

### STATUTES

35 U.S.C. § 282(a) ..... 11

35 U.S.C. § 284 ..... passim

35 U.S.C. § 285 ..... 4, 9

Patent Act of 1836, ch. 357, § 14, 5 Stat. 117 (1836) ..... 4, 6

Patent Act of 1870, ch. 230, § 59, 16 Stat. 198 (1870) ..... 6

### RULES

Supreme Court Rule 37.6 ..... 1

## TABLE OF AUTHORITIES—Continued

Supreme Court Rule 37.2 ..... 1

### TREATISES

Prosser and Keeton on Law of Torts § 34 (5th ed. 1984)..... 10

Restatement (Second) of Torts § 500 (1965)..... 10

Restatement (Third) of Torts: Phys. & Emot. Harm, § 2 (2010) ..... 11

### LEGISLATIVE MATERIALS

S. Rep. No. 79-1503 (1946) ..... 5, 14

### OTHER AUTHORITIES

Anthony Breitzman & Diana Hicks, An Analysis of Small Business Patents By Industry and Firm Size (Nov. 2008), *available at* http://archive.sba.gov/advo/research/rs335tot.pdf... 13

Dennis Crouch, *No Willful Infringement Since Infringer's Litigation Arguments Were "Not Without Reason"*, Patently-O (Dec. 19, 2014), http://patentlyo.com/patent/2014/12/infringement-infringers-litigation.html..... 10

## TABLE OF AUTHORITIES—Continued

U.S. Dep't of Commerce, *Intellectual Property and the U.S. Economy: Industries in Focus* (Mar. 2012) ..... 12

ADDRESS OF THE ADVOCATE OF THE PATENTEES, INVENTORS OF USEFUL IMPROVEMENTS IN THE ARTS AND SCIENCES: IN DEFENCE OF MENTAL PROPERTY 9 (Dec. 19, 1806) ..... 1, 12

## INTEREST OF *AMICI CURIAE*[1]

> *A man's useful inventions subject him to insult, robbery, and abuse.* –Benjamin Franklin.[2]

Perhaps the most important feature of the American patent system is that it does more than simply encourage ordinary people to invent new products and services. It also makes it economically feasible for them to do so.

*Amici curiae* are individual inventors and associations that share a common interest in a robust patent system that encourages and appropriately rewards successful inventive pursuits. Collectively, *amici* have invested significant energy and personal resources on research and development in their respective technical fields. *Amici* rely on

---

[1] In accordance with Supreme Court Rule 37.6, *amici curiae* certify that: (1) no counsel to a party authored this brief, in whole or in part, (2) no person or entity, other than the *amici* represented on this brief, their members, and their counsel, have made a monetary contribution to the preparation and submission of this brief, and (3) that counsel of record for all parties received notice of the intention to file this *amici curiae* brief at least 10 days prior to the due date for filing. Written consent of the parties has been obtained in Case No. 14-1520 and will be filed with the Clerk of the Court pursuant to Supreme Court Rule 37.2. Together with this brief, *amici curiae* have attached a motion for leave to file in Case No. 14-1513.

[2] ADDRESS OF THE ADVOCATE OF THE PATENTEES, INVENTORS OF USEFUL IMPROVEMENTS IN THE ARTS AND SCIENCES: IN DEFENCE OF MENTAL PROPERTY 9 (Dec. 19, 1806).

patents to protect those investments and to commercialize their discoveries through licensing. Due to their small size, *amici* oftentimes lack the resources or manufacturing ability to fully commercialize all aspects of an invention themselves and therefore must rely on licensing to bring their products to market. But a large company's incentive to take a license from a small inventor is all but eliminated, as in the cases at bar, if the only punishment for refusing a license and losing an infringement suit is a royalty.

*Amici* include: U.S. Inventor, Edison Nation, Inventors Digest, National Society of Inventors, Inventors Network of the Capital Area, Texas Inventors Association, Columbus Phenix City Inventors Association, Music City Inventors Group, Paul Morinville, James Innes, and Louis J. Foreman.

U.S. Inventor is a non-profit association of inventors devoted to protecting the intellectual property of individuals and small companies through education, advocacy, and reform. Believing the interests of larger corporations to be disproportionately overrepresented in the current discussion regarding patent reform, U.S. Inventor aims to encourage dialogue between lawmakers, inventors, and other patent stakeholders concerning the effects of past and proposed patent reform legislation and federal court decisions on the patent rights of small businesses and sole inventors.

Louis J. Foreman is founder and Chief Executive of Enventys, the CEO of Edison Nation and Edison Nation Medical, the Executive Producer of the

award- winning PBS show Everyday Edisons, author of The Independent Inventor's Handbook, and publisher of Inventor's Digest. Himself an inventor on twelve U.S. patents, Mr. Foreman has created nine successful start-ups and has been directly responsible for the creation of over twenty others.

*Amici* join together in this brief to underscore the importance of patents to independent inventors and entrepreneurs who rely on licensing from willing licensees to commercialize inventions. Without the economic returns of a license taken by a willing licensee, inventors have less incentive to engage in costly R&D, and investors have less incentive to fund small start-ups.

## SUMMARY OF ARGUMENT

The text of 35 U.S.C. § 284 places no limits on a district court's discretion to enhance damages in patent cases. The statute simply provides that "the court may increase the damages up to three times the amount found or assessed." The Federal Circuit, however, has artificially constrained lower courts' discretion by engrafting a "willfulness" requirement onto the statue. By further defining "willfulness" using a rigid two-part objective/subjective test that mirrors the test this Court overturned in *Octane Fitness, LLC v. Icon Health and Fitness, Inc.*, 134 S. Ct. 1749 (2014), the Federal Circuit's narrow interpretation of § 284 runs contrary to both the plain language of the current statute and decisions of this Court from over a century ago interpreting the statute's predecessors.

The Patent Act of 1836 first gave courts discretion to increase damages in patent cases based simply on the "circumstances of the case." Patent Act of 1836, ch. 357, § 14, 5 Stat. 117 (1836). In the ensuing decades, never did this Court limit those circumstances to instances of "willful" patent infringement. Instead, this Court explained that enhanced damages were broadly available, for example, where "the defendant has not acted in good faith, or has been stubbornly litigious, or has caused unnecessary expense and trouble to the plaintiff," *Day v. Woodworth*, 54 U.S. 363, 372 (1851), and also to compensate the plaintiff for the "trouble the plaintiff has been put to by the defendant, and any special inconvenience he has suffered from the wrongful acts of the defendant," *Clark v. Wooster*, 119 U.S. 322, 326 (1886).

This Court's decision in *Octane Fitness* casts further doubt on the Federal Circuit's two-part test for enhancing damages under § 284. In *Octane Fitness*, this Court struck down a similarly rigid, two-part test for awarding attorney fees under 35 U.S.C. § 285, holding that the Federal Circuit "superimpose[d] an inflexible framework onto statutory text that is inherently flexible." 134 S. Ct. at 1751. Moreover, the permissive language of § 284 is even more flexible than that of § 285, because the former is not limited to a finding that a case is "exceptional." *Compare* 35 U.S.C. § 284 ("[T]he court may increase the damages up to three times the amount found or assessed."), *with* 35 U.S.C. § 285 ("The court in exceptional cases may award reasonable attorney fees to the prevailing party.").

The Federal Circuit had an opportunity to resolve these issues in the captioned case and in *Halo Elecs., Inc. v. Pulse Elecs., Inc.*, 780 F.3d 1357 (Fed. Cir. 2015) but declined, despite the dissent of two judges and the concurrence of two others who acknowledged "fundamental questions about the substantive standards" of enhanced damages under § 284. *Id. at* 1359 (Fed. Cir. 2015) (Taranto, Reyna, JJ., concurring); *id.* at 1361-64 (O'Malley, Hughes, JJ., dissenting); *Stryker Corp. v. Zimmer, Inc.*, 782 F.3d 649 (Fed. Cir. 2015).

This Court should grant certiorari in the captioned case and in *Halo* (No. 14-1513) to correct the Federal Circuit's misreading of 35 U.S.C. § 284.

## ARGUMENT

### I. The Federal Circuit's Two-Part Objective/Subjective Test for Enhancing Damages is Contrary to Statute and this Court's Decisions

a. The plain text of 35 U.S.C. § 284 gives district courts wide discretion to increase damages: "[T]he court may increase the damages up to three times the amount found or assessed." The legislative history from the 1946 revision to the Patent Act underscores this discretion, explaining that "the present discretion to award triple damages . . will discourage infringement of a patent by anyone thinking that all he would be required to pay if he loses the suit would be a royalty." S. Rep. No. 79-1503, at 2 (1946).

That discretion was first introduced in the Patent Act of 1836, ch. 357, § 14, 5 Stat. 117 (1836): "[I]t shall be in the power of the court to render judgment for any sum above the amount found by such verdict . . . not exceeding three times the amount thereof, according to the circumstances of the case . . . ." That discretion remained unchanged in the Patent Act of 1870, ch. 230, § 59, 16 Stat. 198, 207 (1870) ("[T]he court may enter judgment thereon for any sum above the amount found by the verdict as the actual damages sustained, according to the circumstances of the case, not exceeding three times the amount of such verdict, together with the costs.").

Interpreting the 1836 and 1870 Patent Acts, this Court repeatedly emphasized the inherent flexibility of the enhanced damages provisions, and never limited trial courts' discretion to any particular circumstances, much less a finding of "willfulness":

- *Topliff v. Topliff*, 145 U.S. 156, 174 (1892) ("Under these circumstances"—i.e., where "*defendant, knowing all their customers and plaintiffs' facilities for the manufacture of equalizers, made serious inroads upon their business, and sold almost exclusively to those who had formerly been customers of the plaintiffs*"—"we should not have disturbed the decree of the court below if it had seen fit to increase the damages . . . .") (emphasis added).

- *Tilghman v. Proctor*, 125 U.S. 136, 143-44 (1888) ("[T]he court may, *whenever the circumstances of the case appear to require it*, inflict vindictive or

punitive damages, by rendering judgment for not more than thrice the amount of the verdict.") (emphasis added).

- *Clark v. Wooster*, 119 U.S. 322, 326 (1886) ("There may be damages beyond [a reasonably royalty], such as the *expense and trouble the plaintiff has been put to by the defendant, and any special inconvenience he has suffered from the wrongful acts of the defendant*; but these are more properly the subjects of allowance by the court under the authority given to it to increase the damages.") (emphasis added).

- *Birdsall v. Coolidge*, 93 U.S. 64, 69-70 (1876) ("Courts could not, under [the act of 1836], augment the allowance made by the final decree [in actions in equity], as in the case of the verdict of a jury [in actions at law]; but the present patent act [of 1870] provides that the court shall have the same *powers to increase the decree, in its discretion*, that are given by the act to increase the damages found by verdicts in actions at law.") (emphasis added).

- *Teese v. Huntingdon*, 64 U.S. 2, 9 (1860) ("[I]f, in the opinion of the court, the defendant has not acted in good faith, or *has caused unnecessary expense and injury to the plaintiff*, the court may render judgment for a larger sum, not exceeding three times the amount of the verdict.") (emphasis added).

- *Dean v. Mason*, 61 U.S. 198, 203 (1858) ("Generally, [an award of lost profits] is sufficient to protect the rights of the owner; but *where the*

*wrong has been done, under aggravated circumstances*, the court has the power, under the statute, to punish it adequately, by an increase of the damages.") (emphasis added).

- *Seymour v. McCormick*, 57 U.S. 480, 488-89 (1853) ("The power to inflict vindictive or punitive damages is committed to the *discretion and judgment of the court* within the limit of trebling the actual damages found by the jury.") (emphasis added).

- *Day v. Woodworth*, 54 U.S. 363, 372 (1851) ("[I]f, in the opinion of the court, the defendant has not acted in good faith, or has been *stubbornly litigious, or has caused unnecessary expense and trouble to the plaintiff*, the court may increase the amount of the verdict, to the extent of trebling it.") (emphases added).

b. Despite that history, and contrary to the "plain meaning of the statute," the Federal Circuit "has nevertheless read a willfulness standard into the statute." *In re Seagate Tech., LLC*, 497 F.3d 1360, 1377 (Fed. Cir. 2007) (Gajarsa, J., concurring) (arguing that "there is no principled reason for continuing to engraft a willfulness requirement onto section 284"). Further cabining the statute, the *en banc* court in *Seagate* defined "willfulness" narrowly using a two-part test that requires a clear-and-convincing showing of (1) an "objectively high likelihood [of] infringement" which was (2) subjectively "known or . . . should have been known" to the infringer. *Id.* at 1371.

As the dissenting judges in the *Halo* proceedings below correctly explained, the two-part *Seagate* test "is analogous to the test [the Federal Circuit] prescribed for the award of attorneys' fees under [35 U.S.C.] § 285" which was "overruled by *Octane Fitness, LLC v. ICON Health & Fitness, Inc.*, 134 S. Ct. 1749, 1757-58 (2014)." *Halo*, 780 F.3d at 1361 (O'Malley, Hughes, JJ., dissenting).

In particular, this Court in *Octane Fitness* struck down the Federal Circuit's two-part objective/subjective test under § 285 because that test "superimpose[d] an inflexible framework onto statutory text that is inherently flexible." 134 S. Ct. at 1756. Indeed, a court's discretion to enhance damages under § 284 is *even broader* than the discretion to shift fees under § 285, because the former is not limited to a finding that the case is "exceptional."

c. This Court's decision in *Aro Mfg. Co. v. Convertible Top Replacement Co.*, 377 U.S. 476 (1964) did not purport to alter a century's worth of precedent interpreting § 284 and its predecessors. In *Aro*, this Court merely said, in passing, that the patentee "could" recover treble damages under circumstances of willful or bad-faith infringement. 377 U.S. at 508. That statement is properly interpreted to mean that "a finding of willfulness is *sufficient*" to enhance damages; it "cannot be interpreted to mean that enhanced damages are *limited* to a finding of willfulness." *Seagate*, 497 F.3d at 1381 (Gajarsa, J., concurring) (emphases added).

d. Apart from unnecessarily engrafting "willfulness" onto § 284, the Federal Circuit has

defined willfulness with its own two-part objective/subjective test that bears almost no resemblance to the traditional tort doctrine.

Specifically, under the Federal Circuit's "objective" prong for willfulness, an infringer's pre-suit infringement can be deemed not willful if its attorneys, in the litigation, devise a "not unreasonable" defense, developed for the first time post-suit. *Stryker Corp. v. Zimmer, Inc.*, 782 F.3d 649, 654, 657, 661, 662 (Fed. Cir. 2015). By this logic, as commenters have observed, "an infringer who made the intentional decision to infringe, believing fully that the act was infringement, and that was later judged to be infringing can still avoid being stuck with enhanced damages with a later-concocted (but ultimately incorrect) argument that the patent is invalid or not infringed—so long as that argument is 'susceptible to a reasonable conclusion.'" Dennis Crouch, *No Willful Infringement Since Infringer's Litigation Arguments Were "Not Without Reason"*, Patently-O (Dec. 19, 2014), http://patentlyo.com/patent/2014/12/infringement-infringers-litigation.html (quoting *Uniloc USA, Inc. v. Microsoft Corp.*, 632 F.3d 1292, 1310 (Fed. Cir. 2011)).

The above "willfulness" test for patent infringement now looks nothing like the traditional tort doctrine in civil cases. *See Farmer v. Brennan*, 511 U.S. 825, 836 (1994); Prosser and Keeton on Law of Torts § 34, p. 213-14 (5th ed. 1984); Restatement (Second) of Torts § 500 (1965)). Under the traditional doctrine, a person's conduct is not judged on the reasonableness of his attorney's legal

arguments minted years later, nor judged from the vantage of an omniscient person aware of all facts in the world. Rather, "[a] person acts recklessly in engaging in conduct if: (a) the person *knows* of the risk of harm created by the conduct or *knows* facts that make the risk obvious to *another in the person's situation*, and (b) the precaution that would eliminate or reduce the risk involves burdens that are so slight relative to the magnitude of the risk as to render the person's failure to adopt the precaution a demonstration of the person's indifference to the risk." Restatement (Third) of Torts: Phys. & Emot. Harm, § 2 (2010) (emphases added).

In *Safeco Ins. Co. of Am. v. Burr*, 551 U.S. 47 (2007), this Court held that Safeco did not "willfully" violate the Fair Credit Reporting Act because "Safeco's *misreading* of the statute *was* not reckless." *Id.* at 71 (emphases added). Thus, Safeco actually *read* the statute but operated under a mistaken interpretation *at the time it violated the statute. See id.* at 70 (analogizing to *Saucier v. Katz*, 533 U.S. 194, 202 (2001), and asking "whether an action was reasonable in light of legal rules that were *'clearly established' at the time*") (emphasis added).

e. The statutory presumption of validity, 35 U.S.C. § 282(a), prevents an infringer, who is notified of a patent, from burying its head in the sand and refusing to take a license on the mere hope that one day its attorneys will conjure a "not unreasonable" litigation defense. Section 282(a) states, in relevant part, "[a] patent shall be presumed valid." That presumption exists at all times after a patent has issued—including when a licensing offer is sent to a

potential infringer—and remains "*until* the presumption has been *overcome* by convincing evidence of error." *Microsoft Corp. v. i4i Ltd. P'ship*, 131 S. Ct. 2238, 2248 (2011) (quoting *Radio Corp. of Am. v. Radio Eng'g Labs.*, 293 U.S. 1, 7 (1934)) (emphases added). Therefore, if the statutory presumption of validity is to have any real meaning, an infringer who refuses a reasonable licensing offer ought to have a good reason for its refusal at the time.

## II. The *Halo* and *Stryker* Petitions Implicate Billions of Dollars of Gross Domestic Product and the Future of America's Small Inventors

> *A man's useful inventions subject him to insult, robbery, and abuse.* –Benjamin Franklin.[3]

The U.S. Department of Commerce has calculated that intellectual property intensive industries support at least 40 million American jobs and contribute more than $5.06 trillion dollars to, or nearly 34.8 percent of, U.S. gross domestic product. U.S. Dep't of Commerce, *Intellectual Property and the U.S. Economy: Industries in Focus* vi-vii (Mar. 2012). In 2009, Americans received $89.8 billion in intellectual property royalties and license fees, while

---

[3] ADDRESS OF THE ADVOCATE OF THE PATENTEES, INVENTORS OF USEFUL IMPROVEMENTS IN THE ARTS AND SCIENCES: IN DEFENCE OF MENTAL PROPERTY 9 (Dec. 19, 1806).

paying foreigners only $25.2 billion—giving the United States a *$64.6 billion trade surplus* in IP licensing. *Id.* at 54.

Licensing is critical to independent inventors and entrepreneurs who do not have the means to commercialize their inventions themselves. What they have instead is patents. A study commissioned by the Small Business Administration found that: (1) "Small businesses develop more patents per employee than larger businesses, with the smallest firms, those with fewer than 25 employees, producing the greatest number of patents per employee"; and (2) "small firms are much more likely to develop emerging technologies than are large firms."[4]

But the incentive to pay a small inventor for a license is all but eliminated when an infringer is allowed—as in the proceedings below—to *deliberately copy* a patented product, *reject* the patentee's licensing offers, *refuse* to negotiate, obtain *no opinion* of counsel, *infringe* the patent for years, *poach customers*, and then—after being sued for infringement—concoct a litigation defense that is *unsuccessful* (but at least not rock-bottom "frivolous" or a "sham") and ultimately pay the patentee only a "reasonable royalty" in damages. This "reasonable royalty" is the same amount the infringer would

---

[4] Anthony Breitzman & Diana Hicks, An Analysis of Small Business Patents By Industry and Firm Size i, v (Nov. 2008), *available at* http://archive.sba.gov/advo/research/rs335tot.pdf.

have paid if it had taken a license in the first place. *See Powell v. Home Depot U.S.A., Inc.*, 663 F.3d 1221, 1238 (Fed. Cir. 2011) ("[T]he reasonable royalty must be based on the terms of a [hypothetical] licensing agreement reached . . . between the patentee and the infringer at the time infringement began.") (alteration in original; internal quotations omitted) (quoting *Rite-Hite Corp. v. Kelley Co.*, 56 F.3d 1538, 1554 (Fed. Cir. 1995) (en banc)). The lesson for infringers today is clear: refuse a license from a small inventor because you will pay the inventor the same (unenhanced) royalty post-suit in damages if you lose the suit that you would have paid for the license pre-suit.

Giving district courts the discretion to enhance damages under these circumstances, as Congress intended, would "discourage infringement of a patent by anyone thinking that all he would be required to pay if he loses the suit would be a royalty." S. Rep. No. 79-1503, at 2 (1946).

## CONCLUSION

For the foregoing reasons, this Court should grant certiorari to correct the Federal Circuit's interpretation of 35 U.S.C. § 284.

Respectfully submitted,

ANDREW S. BALUCH
*Counsel of Record*
STEPHEN G. NAGY
*Of Counsel*
STRAIN & STRAIN PLLC
1455 Pennsylvania Ave., N.W.,
Suite 400
Washington, D.C. 20004
(202) 621-1872
andrew.baluch@strainpllc.com

*Counsel for Amici Curiae*

No. 14-1520

IN THE

# Supreme Court of the United States

STRYKER CORPORATION, STRYKER PUERTO RICO, LTD., AND STRYKER SALES CORPORATION,
*Petitioners,*

*v.*

ZIMMER, INC. AND ZIMMER SURGICAL, INC.,
*Respondents.*

**On Petition for a Writ of Certiorari to the United States Court of Appeals for the Federal Circuit**

## BRIEF OF NOKIA TECHNOLOGIES OY AND NOKIA USA INC. AS *AMICI CURIAE* IN SUPPORT OF PETITION FOR A WRIT OF CERTIORARI

JOHN D. HAYNES
*Counsel of Record*
LINDSEY YEARGIN
ALSTON & BIRD LLP
1201 W. Peachtree St.
Atlanta, GA 30309
Tel. (404) 881-7000
john.haynes@alston.com

*Counsel for Amici Curiae*

July 24, 2015

## TABLE OF CONTENTS

INTEREST OF THE *AMICI CURIAE* ..... 1

SUMMARY OF ARGUMENT ..... 3

ARGUMENT ..... 5

I. AN AWARD OF ENHANCED DAMAGES UNDER § 284 SHOULD NOT REQUIRE A FINDING OF WILLFULNESS ..... 5

A. The Statutory Language of § 284 Provides No Support for a Willfulness Requirement ..... 5

B. The Federal Circuit's Grafting of a Willfulness Requirement onto § 284 is Contrary to the Legislative History of the Statute and Ignores the Remedial Purpose of Enhanced Damages ..... 8

II. REVIEW IS NEEDED TO RECONCILE THE LEGAL STANDARD FOR ENHANCED DAMAGES UNDER SECTION 284 WITH THIS COURT'S PRECEDENT REGARDING SECTION 285 ..... 12

A. This Court's Rejection of the Federal Circuit's Unduly Rigid Test for Fee-Shifting Under § 285 Favors Rejection of the Federal Circuit's Equally Rigid Test Under § 284 ..... 12

B. This Court's Precedent Confirms that a Heightened Standard of Proof Is Not Required to Award Enhanced Damages ..... 15

III. THE FEDERAL CIRCUIT'S TEST IS OVERLY RIGID EVEN WITH RESPECT TO WILLFULNESS ..... 16

A. The Federal Circuit's Willfulness Test Encourages Free-Riding by Infringers and Discourages Innovation ..... 17

B. The High Standard of Proof Required to Satisfy the Willfulness Standard Creates an Unreasonable Burden for a Patent Owner to Obtain Enhanced Damages ..... 21

IV. THE FEDERAL CIRCUIT IS DIVIDED ON THE ISSUE OF WILLFULNESS ..... 23

CONCLUSION ..... 24

## TABLE OF AUTHORITIES

CASES

*Brooks Furniture Mfg., Inc. v. Dutailier Int'l, Inc.*, 393 F.3d 1378 (Fed. Cir. 2005) ..... 12, 14

*Datascape Corp. v. SMEC, Inc.*, 879 F.2d 820 (Fed. Cir. 1989) ..... 18

*eBay Inc. v. MercExchange, L.L.C.*, 547 U.S. 388 (2006) ..... 11

*Gen. Motors Corp. v. Devex Corp.*, 461 U.S. 648 (1983) ..... 7

*Grogan v. Garner*, 498 U.S. 279 (1991) ..... 22

*Halo Elecs., Inc. v. Pulse Elecs., Inc.*, 769 F.3d 1371 (Fed. Cir. 2014) ..... passim

*Halo Elecs., Inc. v. Pulse Elecs., Inc.*, No. 14-1513 ..... 5

*Herman & MacLean v. Huddleston*, 459 U.S. 375 (1983) ..... 22

*iLOR, LLC v. Google, Inc.*, 631 F.3d 1372 (Fed. Cir. 2011) ..... 14

*In re Seagate Tech., LLC*, 497 F.3d 1360 (Fed. Cir. 2007) ..... passim

*King Instruments Corp. v. Perego*,
65 F.3d 941 (Fed. Cir. 1995) ..... 9

*Octane Fitness, LLC v. ICON Health & Fitness, Inc.*,
134 S. Ct. 1749 ..... passim

*Prof'l Real Estate Investors, Inc. v. Columbia Pictures Industries, Inc.*,
508 U.S. 49 (1993) ..... 13

*Resqnet.com, Inc. v. Lansa, Inc.*,
533 F. Supp. 2d 397 (S.D.N.Y. 2008) ..... 17

*Rite-Hite Corp. v. Kelley Co.*,
819 F.2d 1120 (Fed. Cir. 1987) ..... 9, 18

*Stickle v. Heublein*,
716 F.2d 1550 (Fed. Cir. 1983) ..... 9

*TE-TA-MA Truth Foundation-Family of URI, Inc. v. World Church of the Creator*,
392 F.3d 248 (7th Cir. 2004) ..... 7

*TGIP, Inc. v. AT&T Corp.*,
527 F. Supp. 2d 561 (E.D. Tex. 2007) ..... 17

**STATUTES**

15 U.S.C. § 15(a) ..... 23

17 U.S.C. § 504(c)(2) ..... 6

35 U.S.C. § 284 ..... passim

35 U.S.C. § 285 ..... passim

Patent Act of 1793, ch. 11, § 5,
1 Stat. 318, 322 (repealed 1836) ..... 8

Patent Act of 1836, ch. 357, § 14,
5 Stat. 117, 123 ..... 8

**OTHER AUTHORITIES**

Justin P. Huddleson, *Objectively Reckless: A Semi-Empirical Evaluation of In re Seagate*,
15 B.U. J. SCI. & TECH. L. 102 (2009) ..... 20

Sen. John Ruggles, S. Report Accompanying
Senate Bill No. 239 (Apr. 28, 1836) ..... 9

## INTEREST OF THE *AMICI CURIAE*[1]

*Amici curiae* are Nokia Technologies Oy and Nokia USA Inc. (collectively, "Nokia"). Nokia is a global leader and innovator in the telecommunications equipment and services industry. The Nokia group of companies have cumulatively invested over $70 billion in research and development relating to mobile communications. As a result of this substantial commitment, Nokia currently owns more than 10,000 patent families, including a large number of standard-essential patents. Nokia continues to invest heavily in research and development and to license and expand its industry-leading patent portfolio. For example, Nokia continues to develop and license innovations that are powering the next revolution in computing and mobility: the "programmable world" where intelligent connections bring millions of everyday objects online. This work includes a team of experts in areas including digital healthcare, digital

---

[1] Pursuant to Supreme Court Rule 37.6, counsel for *amici curiae* state that no counsel for a party authored this brief in whole or in part, or made a monetary contribution intended to fund the preparation or submission of this brief, and no other person other than *amici curiae*, its members, or its counsel made such a contribution. Pursuant to Supreme Court Rule 37.2, counsel for *amici curiae* represent that all counsel of record received notice of *amici curiae*'s intent to file this *amicus curiae* brief. Pursuant to Supreme Court Rule 37.3, counsel for *amici curiae* represent that all parties have consented to the filing of this brief. Petitioner and Respondent each gave written consent to counsel for *amici curiae* to file this *amici curiae* brief.

multimedia, imaging and sensing, wireless connectivity and power management, advanced materials, and others.

Nokia and its parent company have been involved in numerous patent cases in U.S. district courts, both as a plaintiff and a defendant, including cases where enhanced damages under 35 U.S.C. § 284 were sought by or against Nokia. Nokia is a significant patent owner that might seek such enhanced damages for certain kinds of patent infringement in U.S. district courts.

Nokia's interest in this case is to advocate for the appropriate statement and application of legal standards governing enhanced damages under 35 U.S.C. § 284, and to ensure that those standards balance the interests of patent holders and those of users of patented technology. Companies like Nokia must be assured that their past, present, and future substantial research and development efforts are protectable under the U.S. patent regime and that, upon an appropriate request and showing, they are able to receive proper remediation and adequate compensation, including recovery of enhanced damages, for unauthorized uses of their patented technologies. Although Nokia does not take any ultimate position on the facts of this specific case, Nokia supports Petitioner's position that this Court should grant a writ of certiorari in this case in order to provide guidance as to the appropriate standard governing an award of enhanced damages under 35 U.S.C. § 284.

## SUMMARY OF ARGUMENT

Section 284 of the Patent Act grants to trial courts the discretion to award enhanced damages in patent cases. 35 U.S.C. § 284. Despite the plain language of this statute, the Federal Circuit has imposed a willfulness requirement onto § 284 and has set forth an overly rigid two-part test and an unreasonably high burden of proof for determining when a defendant has committed willful infringement. These requirements conflict with recent guidance from the Supreme Court and make it unreasonably difficult for patent owners to obtain enhanced damages in many patent cases, thus encouraging continued infringement and discouraging further investment in innovation.

This Court recently recognized, in the context of attorney fees awards under section 285 of the Patent Act, that such rigid tests are not warranted by statute and improperly limit the exercise of the district court's discretion. *Octane Fitness, LLC v. ICON Health & Fitness, Inc.*, 134 S. Ct. 1749, 1755-56. This Court's reasoning in *Octane Fitness* is equally applicable in the context of awarding enhanced damages, and a similar approach should be applied. Requiring the same approach to enhanced damages under § 284 as that applied to fee shifting under § 285 also properly balances the interests of patent holders against those of accused infringers to ensure that patent holders are properly compensated and that improper conduct, such as copying, holding out in licensing discussions, bad faith, and/or other

dilatory negotiation tactics, or other unreasonable conduct by implementers of patented technologies is both deterred and remediated when the facts of a given case as a whole warrant an award of enhanced damages.

The Federal Circuit's overly rigid standard for awarding enhanced damages is unfair to patent owners in many patent cases, including, for example, those that may involve standard-essential patents. Because patent owners often agree to license such patents on fair, reasonable, and non-discriminatory ("FRAND") terms, which is viewed by some as a limitation on available remedies, infringing implementers more and more frequently are engaging in dilatory and other unfair negotiation tactics to avoid paying appropriate compensation under a license, as these infringers believe under current rules that they likely will never have to pay any more than a fair and reasonable royalty for their infringing use. As a result, such infringing implementers frequently choose to ignore the patent rights of the owners of standard-essential patents and to continue to infringe without significant risk of remediation or retribution for their unreasonable conduct. District courts should have the discretion to award enhanced damages under appropriate circumstances to deter such conduct.

The need for review of the currently-applied enhanced damages standard is made even more apparent by the fact that this standard is also at issue in a co-pending petition for a writ of certiorari

in *Halo Electronics, Inc. v. Pulse Electronics, Inc.*, No. 14-1513, in which Nokia has contemporaneously filed an amicus brief setting forth the same arguments presented below. This issue is of utmost importance to the patent community. This Court should therefore grant Petitioner's petition for a writ of certiorari in order to reevaluate the current judicially-created standard for an award of enhanced damages under § 284. The current standard lacks support in the statute, conflicts with the guidance of this Court, and is out of line with important policy considerations.

## ARGUMENT

### I. AN AWARD OF ENHANCED DAMAGES UNDER § 284 SHOULD NOT REQUIRE A FINDING OF WILLFULNESS

#### A. The Statutory Language of § 284 Provides No Support for a Willfulness Requirement

Section 284 of the Patent Act states that "the court may increase the damages up to three times the amount found or assessed." 35 U.S.C. § 284. This section does not limit the circumstances in which such enhanced damages are appropriate, instead leaving the decision to the discretion of the trial court. *See id.* The statute does not require any subjective inquiry into the mind of the accused infringer, nor does it identify any specific criteria

that must be met before the district court may exercise its discretion to award enhanced damages.

Despite the broad discretion afforded by § 284, the Federal Circuit has held that increased damages are only available when a defendant is guilty of willful infringement. *See In re Seagate Tech., LLC*, 497 F.3d 1360, 1368 (Fed. Cir. 2007). The Federal Circuit, moreover, has further restricted the availability of enhanced damages with an overly rigid two-part test for determining whether this willfulness standard is met. Under the first prong of this concocted test, a patent owner "must show by clear and convincing evidence that the infringer acted despite an objectively high likelihood that its actions constituted infringement of a valid patent." *Id.* at 1371. If this threshold objective standard is satisfied, the patent owner must then prove that the objectively-defined risk "was either known or so obvious that it should have been known to the accused infringer." *Id.* This added requirement of willfulness is an error that must be corrected.

When grafting a willfulness requirement onto § 284, the Federal Circuit sought guidance from the enhanced damages provision in copyright law. *See id.* at 1370. Although copyright law may provide guidance in limited circumstances, the Federal Circuit's reliance on copyright law in this context was improper. Unlike § 284 of the Patent Act, in the Copyright Act Congress explicitly set forth a willfulness requirement for a finding of enhanced damages. 17 U.S.C. § 504(c)(2) ("In a case where the

copyright owner sustains the burden of proving, and the court finds, that infringement was committed willfully, the court in its discretion may increase the award of statutory damages....."). The glaring absence of such a requirement in the Patent Act suggests that Congress did *not* intend for there to be such a requirement. *See Seagate*, 497 F.3d at 1381-82 (Gajarsa, J., concurring). Clear statements from Congress should exist before placing limits on recovery for patent infringement. *See Gen. Motors Corp. v. Devex Corp.*, 461 U.S. 648, 653 (1983) ("When Congress wished to limit an element of recovery in a patent infringement action, it said so explicitly."). Conversely, statutes lacking clear statements generally have been interpreted as giving courts broad equitable discretion to award enhanced damages. *See, e.g., TE-TA-MA Truth Foundation-Family of URI, Inc. v. World Church of the Creator*, 392 F.3d 248, 261 (7th Cir. 2004) ("The broad discretion accorded a district court under § 1117(a)...is inconsistent with an interpretation that restricts a prevailing plaintiff to recovery of fees only in cases of willful infringement."). Given the broad language of § 284 and the omission of a willfulness requirement, the decision regarding whether to award enhanced damages should be left to the discretion of the court upon consideration of the totality of the circumstances.

### B. The Federal Circuit's Grafting of a Willfulness Requirement onto § 284 is Contrary to the Legislative History of the Statute and Ignores the Remedial Purpose of Enhanced Damages

When *Seagate* was first decided, two Federal Circuit judges advocated for the removal of the willfulness requirement from § 284. *Seagate*, 497 F.3d at 1376-84 (Gajarsa, J., concurring). As Judges Gajarsa and Newman set forth in their concurring opinion, the judicially manufactured willfulness requirement finds no support in the legislative history, ignores the compensatory function of enhanced damages, and improperly limits judicial discretion.

The first patent statute to include a provision for enhanced damages included a mandatory requirement for an infringer to pay enhanced damages. Patent Act of 1793, ch. 11, § 5, 1 Stat. 318, 322 (repealed 1836). The Patent Act of 1836 removed this mandatory requirement and instead granted courts the discretion to award enhanced damages "according to the circumstances of the case." Patent Act of 1836, ch. 357, § 14, 5 Stat. 117, 123. As emphasized by Judge Gajarsa, "[n]othing in the phrase 'according to the circumstances of the case' implies that the district court's discretion to award enhanced damages is contingent upon a finding of willfulness." *Seagate*, 497 F.3d at 1377 (Gajarsa, J., concurring). The enhanced damages provision of the current § 284 is substantively identical to the

provision in the 1836 Act. *See* 35 U.S.C. § 284. It is therefore clear that the purpose of this statute was to provide discretion to the courts to enhance patent damages.

Requiring willfulness for an award of enhanced damages also ignores the compensatory aspect of such damages. As originally drafted, discretionary enhanced damages were designed, at least in part, to ensure that the patent owner was properly compensated for infringement. *See* Sen. John Ruggles, S. Report Accompanying Senate Bill No. 239, at 6 (Apr. 28, 1836) (recognizing that one problem to be addressed by the 1836 Patent Act was the fact that pre-1836 patent law "offer[ed] an inadequate remedy for the [infringement] injury"). And even the Federal Circuit has recognized that enhanced damages may be necessary to properly compensate a patent owner. *See, e.g., King Instruments Corp. v. Perego*, 65 F.3d 941, 951 n. 6 (Fed. Cir. 1995) ("Such discretionary increases may be appropriate where plaintiffs cannot prove direct and foreseeable damages in the form of lost profits."); *Rite-Hite Corp. v. Kelley Co.*, 819 F.2d 1120, 1126 (Fed. Cir. 1987) ("Whether or not willfulness is found, the court has authority to consider the degree of culpability of the tortfeasor. The measure of damages...provides an opportunity for the trial court to balance equitable concerns as it determines whether and how to recompense the successful litigant."); *Stickle v. Heublein*, 716 F.2d 1550, 1563 (Fed. Cir. 1983) ("[T]he trial court may award an amount of damages greater than a reasonable

royalty so that the award is adequate to compensate for the infringement."). As explained by Judge Gajarsa, situations in which an award of enhanced damages may be necessary to adequately compensate a patent owner, irrespective of a willfulness finding, could include, for example, those where a defendant's sales data is lost prior to discovery or where a court determines that enhanced damages are more appropriate than injunctive relief. *Seagate*, 497 F.3d at 1378 (Gajarsa, J., concurring).

Another example where an award of enhanced damages may be appropriate without a finding of willfulness is in cases involving standard-essential patents. When a patent is declared essential to an industry standard, the patent owner is often obligated to license the patent on FRAND terms. When a patent owner has expressed a willingness to license its patent on FRAND terms, an infringing implementer may believe that the patent owner has limited its available remedies for unauthorized use and, as a result, may engage in dilatory or hold-out tactics in order to delay, if not outright avoid, paying for a license. Infringing implementers may be incentivized to engage in dilatory tactics because they believe that any royalties awarded in a patent case would be effectively capped at a FRAND rate. The FRAND commitment, therefore, may work to provide an incentive for the infringing implementer to continue infringement without payment of compensation for as long as possible in order to gain all of the benefits of postponed cash outlays or other value transfers. District courts should have the

discretion to award enhanced damages under § 284 in these kinds of situations in order to fully compensate patent owners and deter such harmful hold-out tactics.

Moreover, the historical practice of awarding enhanced damages upon a finding of willfulness does not justify a general rule requiring willfulness as a prerequisite for such awards. *Cf. eBay Inc. v. MercExchange, L.L.C.*, 547 U.S. 388, 395 (2006) (observing that the historical practice of granting injunctions in the vast majority of patent cases "does not *entitle* a patentee to a permanent injunction or justify a *general rule* that such injunctions should issue."). Because willful infringement was the most common reason for a court to award enhanced damages, the case law quickly began to focus on that issue to the exclusion of other circumstances that may have warranted exercise of the district court's discretion.

The Federal Circuit's grafting of a willfulness requirement onto § 284 is contrary to the statute's legislative history, ignores the compensatory aspect of enhanced damages, and improperly eliminates the discretion granted to the district court. This Court should therefore grant certiorari in this case to review and remove the willfulness requirement.

## II. REVIEW IS NEEDED TO RECONCILE THE LEGAL STANDARD FOR ENHANCED DAMAGES UNDER SECTION 284 WITH THIS COURT'S PRECEDENT REGARDING SECTION 285

This Court recently rejected the Federal Circuit's overly rigid test for awarding attorney fees under § 285 of the Patent Act, as well as the heightened standard of proof for such fee-shifting determinations. As discussed below, the reasoning applied by the Court under § 285 applies with equal force to § 284.

### A. This Court's Rejection of the Federal Circuit's Unduly Rigid Test for Fee-Shifting Under § 285 Favors Rejection of the Federal Circuit's Equally Rigid Test Under § 284

Section 285 states that "[t]he court in exceptional cases may award reasonable attorney fees to the prevailing party." 35 U.S.C. § 285. The Federal Circuit previously required a showing that a case either involved "material inappropriate conduct" or was both "objectively baseless" and "brought in subjective bad faith" in order to award attorneys' fees. *Brooks Furniture Mfg., Inc. v. Dutailier Int'l, Inc.*, 393 F.3d 1378, 1382 (Fed. Cir. 2005). This Court struck down that test as "unduly rigid," finding that the test "impermissibly encumber[ed] the statutory grant of discretion to district courts." *Octane Fitness, LLC v. ICON Health & Fitness, Inc.*,

134 S. Ct. 1749, 1756 (2014). The Court also noted that the Federal Circuit's requirement that "a district court must determine *both* that the litigation is objectively baseless *and* that the plaintiff brought it in subjective bad faith" was too restrictive. *Id.* at 1757. The Court held instead that either objectively baseless litigation or a plaintiff's subjective bad faith may independently warrant a fee award. *Id.*

The Court further rejected the Federal Circuit's reliance on a prior Supreme Court decision to support its objective/subjective test for fee-shifting. *Id.* The Federal Circuit had imported the standard set forth in *Prof'l Real Estate Investors, Inc. v. Columbia Pictures Industries, Inc.*, 508 U.S. 49 (1993), into § 285. *Id.* The Court held that this importation was improper, noting that "the *PRE* standard finds no roots in the text of § 285." *Id.*

The Court held that the proper test for determining whether fee-shifting is appropriate is the consideration of the totality of the circumstances on a case-by-case basis. *Id.* at 1756. Thus, even though § 285 is limited to "exceptional cases," the Court left the determination of whether fee-shifting is appropriate to the discretion of the district court by allowing the district court to consider the totality of the circumstances.

This Court's reasoning in *Octane Fitness* applies with equal, or even greater, force to awards of increased damages under § 284, for multiple reasons. First, Section 284 provides even greater discretion to

the district court than does Section 285: a district court "may increase the damages up to three times the amount found or assessed." 35 U.S.C. § 284. Like the test for § 285 rejected by this Court, the current Federal Circuit test for § 284 "superimposes an inflexible framework onto statutory text that is inherently flexible." *Octane Fitness*, 134 S. Ct. at 1756.

Second, the objective/subjective test used by the Federal Circuit to determine whether to award enhanced damages is nearly identical to the § 285 test rejected by this Court in *Octane Fitness*, despite that section having a more restrictive "exceptional case" requirement. *See iLOR, LLC v. Google, Inc.*, 631 F.3d 1372, 1377 (Fed. Cir. 2011) ("The objective baselessness standard for enhanced damages and attorneys' fees...under *Brooks Furniture* is identical to the objective recklessness standard for enhanced damages and attorneys' fees against an accused infringer for § 284 willful infringement actions."). This Court should therefore overturn the § 284 test for the same reasons it rejected the § 285 test.

Third, the Federal Circuit's current test for enhanced damages, like its old test for fee-shifting, was predicated on this Court's decision in *PRE*. *See Halo Elecs., Inc. v. Pulse Elecs., Inc.*, 769 F.3d 1371, 1384 (Fed. Cir. 2014) (O'Malley, J., concurring). In *Octane Fitness*, this Court told the Federal Circuit that its interpretation of *PRE* was wrong. *Octane Fitness*, 134 S. Ct. at 1757. "Just as 'the *PRE* standard finds no roots in the text of § 285,' there is

nothing in the text of § 284 that justifies the use of the *PRE* narrow standard." *Halo Elecs.*, 769 F.3d at 1384 (O'Malley, J., concurring) (quoting *Octane Fitness*, 134 S. Ct. at 1757). This Court should thus reject the Federal Circuit's reliance on *PRE* to construct an overly rigid test for awarding enhanced damages under § 284.

Despite the similarities between § 284 and § 285 and the tests constructed by the Federal Circuit to apply those statutes, the Federal Circuit has to date persisted in applying an overly rigid standard to § 284, even after this Court rejected the basis for that standard in *Octane Fitness*. Review is required to reconcile these tests and preserve flexibility and discretion in awarding damages under § 284 as the Court has done for § 285.

### B. This Court's Precedent Confirms that a Heightened Standard of Proof Is Not Required to Award Enhanced Damages

In *Octane Fitness*, this Court also rejected the Federal Circuit's requirement that patent owners establish their entitlement to fees under § 285 by clear and convincing evidence, noting that "patent-infringement litigation has always been governed by a preponderance of the evidence standard." *Octane Fitness*, 134 S. Ct. at 1758. The Court noted that "nothing in § 285 demands such a high standard of proof." *Id.* Instead, "Section 285 demands a simple discretionary inquiry." *Id.*

Like § 285, § 284 contains no language that justifies a higher standard of proof. Section 284 allows enhanced damages at the discretion of the district court, and the award of such damages should also be subject to the lesser preponderance of the evidence standard governing infringement damages. This Court should grant certiorari to remove the heightened burden the Federal Circuit has imposed on patent owners to establish enhanced damages under § 284.

## III. THE FEDERAL CIRCUIT'S TEST IS OVERLY RIGID EVEN WITH RESPECT TO WILLFULNESS

Although willfulness should not be a strict requirement, evidence of willful infringement may support a finding of enhanced damages. However, the Federal Circuit's two-part willfulness test should be rejected even when willfulness is at issue. It improperly permits the focus of the inquiry to be on an infringer's post-suit activities and fails to account for pre-suit conduct that may warrant an award of enhanced damages. Section 284 is not so limited. Review is necessary to remove this test and replace it with a standard that allows the district court to consider the totality of the circumstances, including an infringer's pre-suit activities.

### A. The Federal Circuit's Willfulness Test Encourages Free-Riding by Infringers and Discourages Innovation

When applying the Federal Circuit's current strict two-part willfulness test, courts have focused on the merits of a defendant's post-litigation defenses, rather than on a defendant's pre-suit actions. *See, e.g., Halo Elecs.*, 769 F.3d at 1382-83. District courts have increasingly held that a close call on infringement or the existence of a substantial invalidity defense precludes a finding of willfulness. *See, e.g., Resqnet.com, Inc. v. Lansa, Inc.*, 533 F. Supp. 2d 397, 420 (S.D.N.Y. 2008); *TGIP, Inc. v. AT&T Corp.*, 527 F. Supp. 2d 561, 579 (E.D. Tex. 2007).

Under the Federal Circuit's willfulness standard, no matter how unreasonable, reckless, or intentional an infringer's actions are pre-suit, willful infringers can attempt to avoid the consequences of their actions by simply putting forth a non-frivolous post-suit defense. This does not make sense from a policy perspective. Courts should also focus on objective pre-suit factors, such as the facts known to the accused infringer at the time the accused infringer learned of the patent and proceeded with actions relevant to infringement. Only by looking at all of the relevant evidence can the trier of fact decide whether the accused infringer committed willful infringement. As the Federal Circuit previously recognized, the mere fact that an infringer is able to come up with some plausible defenses at

trial should not negate the infringer's earlier unreasonable, bad faith, or reckless actions. *See Datascape Corp. v. SMEC, Inc.*, 879 F.2d 820, 829 n. 8 (Fed. Cir. 1989) ("[Defendants] will not be permitted to be saved from their flagrant disregard for the patent laws by the fortuity that when the patent in issue was closely scrutinized in this lawsuit, a close question of obviousness was presented.") (internal citation omitted).

Awarding enhanced damages for willful infringement punishes culpable behavior and deters potential infringers from engaging in such behavior. *See Rite-Hite*, 819 F.2d at 1126 ("The role of a finding of 'willfulness' in the law of infringement is partly as...an economic deterrent to the tort of infringement – and partly as a basis for making economically whole one who has been wronged."). The Federal Circuit's current rigid willfulness standard fails to accomplish these important objectives. Under the current standard, an infringer who intentionally chose to infringe a patent, believing fully that the act was infringement, and that was later judged to be infringing, could still successfully avoid enhanced damages by concocting, post-suit, a non-frivolous (but ultimately incorrect) defense. This result encourages infringers to disregard known patent rights of innovators because there is little chance that doing so will result in greater penalty. With a lower threat of being punished, efficient infringement becomes a rational business model, and companies may choose to take the lower risk of willfully infringing a patent to obtain the benefit of free-riding on others'

innovation. The willfulness inquiry as a factor in an enhanced damages analysis serves to deter unreasonable behavior, such as knowing infringement, and the determination of whether enhanced damages are appropriate should enable that goal to be fulfilled. The Federal Circuit's overly rigid test does not do so.

The current willfulness standard is equally problematic with regard to standard-essential patents, such as patents essential to cellular telecommunications standards. After a patent is declared essential to an industry standard, if a company decides to implement the standard and is on notice of another's essential patent, that implementer should take steps to either timely obtain a license and pay appropriate royalties or take all necessary steps to reasonably determine that a license is not needed. However, as discussed above, the implementer has little incentive to timely enter into a license and begin making appropriate payments if it believes that it will at most have to pay FRAND terms for such a license at the end of the day, even if it engages in unreasonable conduct in negotiations, such as hold-out tactics to avoid paying appropriate compensation. If the implementer chooses to ignore the patent rights of others and refuses to timely enter into a license, it is free-riding on the intellectual property rights of others. The availability of enhanced damages may provide a needed deterrent against such hold-out tactics and free-riding because the infringing implementer could face much higher damages awards in appropriate

cases where its conduct so warrants. The Federal Circuit's rigid test, however, removes much of the teeth from this deterrent, and, as a result, users of essential patented technology are incentivized to continue holding out and free-riding as long as possible because, under the current regime, the risk of enhanced damages is mitigated by the possibility that post-suit rationalizations will avoid enhanced damages. Without a meaningful deterrent, there is little risk in this approach and much to gain from continued use of technology without paying for it.

The pre-*Seagate* process for enhancing damages was finely balanced between patent owners and infringers. *See* Justin P. Huddleson, *Objectively Reckless: A Semi-Empirical Evaluation of In re Seagate*, 15 B.U. J. SCI. & TECH. L. 102, 135 (2009). The Federal Circuit's more recent rigid test places most of the burden on the patent owner, thereby increasing the chance that implementers, including willful infringers, will more easily evade enhanced damages. If patent owners are unlikely to get enhanced damages in cases, including those involving willful infringement, some rational patent owners may choose not to pursue every violation. Additionally, the increased costs of proving willfulness, combined with the potential for insufficient compensation, greatly decreases incentives for patenting, thus discouraging continued investment in innovation.

The ability to deter willful infringement is part of a patent's value. The incentive for an

inventor to patent and disclose an invention is only as strong as the property rights of a patent. "The strength of this property right is crucial to foster innovation that would not occur except for the prospect of a patent because companies can expect increased profits from investments in research and development." Huddleson, *supra*. The current willfulness standard set forth in *Seagate* weakens the property rights of a patent by effectively encouraging willful infringement. This Court should thus intervene and set forth a more flexible, discretionary willfulness standard that is consistent with the discretion afforded by § 284.

### B. The High Standard of Proof Required to Satisfy the Willfulness Standard Creates an Unreasonable Burden for a Patent Owner to Obtain Enhanced Damages

Another concern with the Federal Circuit's overly rigid willfulness standard for enhanced damages is that it places the burden on the patent owner to establish both prongs of the current test by clear and convincing evidence. *See Seagate*, 497 F.3d at 1371. This places an unreasonably high burden on the patent owner to obtain an enhanced damages award. The statute contains no such requirement, and the heightened standard imposed by the Federal Circuit undermines the purpose behind it.

When discussing Congress's silence regarding a standard of proof in a statute, this Court has noted that "[t]his silence is inconsistent with the view that

Congress intended to require a special, heightened standard of proof." *Grogan v. Garner*, 498 U.S. 279, 286 (1991). Here, Congress's silence in the legislative history and text of § 284 suggests that a court's discretion to increase a damage award should not be constrained by a requirement of proof higher than a preponderance of the evidence.

As this Court has recognized, a "preponderance-of-the-evidence standard allows both parties to share the risk of error in roughly equal fashion," whereas "[a]ny other standard expresses a preference for one side's interests." *Herman & MacLean v. Huddleston*, 459 U.S. 375, 390 (1983) (internal quotations omitted). The issue of whether to award enhanced damages only arises if the fact-finder has already determined that the defendant has actually infringed a valid and enforceable patent. *See Seagate*, 497 F.3d at 1368. In such cases, the patent owner and the infringer should equally share the risk of an incorrect factual resolution in an enhanced damages determination. Factual issues in an enhanced damages determination should therefore be resolved under a preponderance of the evidence standard.

Finally, it is worth noting that this Court has held that a preponderance of the evidence standard sufficed for recovery under the antitrust laws. *See Herman & McLean*, 459 U.S. at 390. This is significant because a successful antitrust plaintiff automatically recovers treble damages. 15 U.S.C. § 15(a). This demonstrates that heightened burdens of

proof are not required for treble damages awards, and there is no reason to impose such a heightened standard on § 284. This Court should grant certiorari in this case to clarify the appropriate standard for enhanced damages.

## IV. THE FEDERAL CIRCUIT IS DIVIDED ON THE ISSUE OF WILLFULNESS

The need for this Court's intervention is further demonstrated by the Federal Circuit's division on willfulness issues. As discussed above, in *Seagate*, two Federal Circuit judges expressed their belief that there should be no willfulness requirement for the award of enhanced damages under § 284, emphasizing that "the language of the statute unambiguously omits any such requirement." *Seagate*, 497 F.3d at 1376-77 (Gajarsa, J., concurring).

Similarly, in *Halo Electronics*, two other Federal Circuit judges stated that "it is time for the full court to reevaluate our standard for the imposition of enhanced damages in light of the Supreme Court's recent decisions." *Halo Elecs.*, 769 F.3d at 1384 (O'Malley, J., concurring). Noting that the current test for willfulness is analogous to the test for attorneys' fees struck down by this Court in *Octane Fitness*, the judges emphasized the need for reconsideration of not only the willfulness standard, but also of the requirement to establish willfulness by clear and convincing evidence. *Id.* at 1348-85.

At least three of the currently sitting Federal Circuit judges have raised concerns over the unduly rigid test used to determine whether to award enhanced damages under § 284. It is clear that there is significant division among the Federal Circuit regarding the appropriate standard for § 284 determinations. This Court should thus grant certiorari in this case in order to resolve this division.

## CONCLUSION

For the reasons set forth above, the Court should grant Petitioner's Petition for a Writ of Certiorari.

Respectfully submitted,

JOHN D. HAYNES
*Counsel of Record*
LINDSEY YEARGIN
ALSTON & BIRD LLP
1201 W. Peachtree St.
Atlanta, GA 30309
Tel. (404) 881-7000
john.haynes@alston.com

*Counsel for Amici Curiae*

July 24, 2015

Supreme Court, U.S.
FILED
DEC 9 - 2015
OFFICE OF THE CLERK

No. 14-1520

# In the Supreme Court of the United States

STRYKER CORPORATION, ET AL., PETITIONERS

*v.*

ZIMMER, INC., ET AL.

*ON WRIT OF CERTIORARI*
*TO THE UNITED STATES COURT OF APPEALS*
*FOR THE FEDERAL CIRCUIT*

## JOINT APPENDIX

JEFFREY B. WALL
SULLIVAN & CROMWELL LLP
1700 New York Ave., N.W.
Suite 700
Washington, D.C. 20006
wallj@sullcrom.com
(202) 956-7500

*Counsel of Record for Petitioners*

SETH WAXMAN
WILMER CUTLER PICKERING
HALE AND DORR LLP
1875 Pennsylvania Ave., N.W.
Washington, D.C. 20006
seth.waxman@wilmerhale.com
(202) 663-6800

*Counsel of Record for Respondents*

**PETITION FOR A WRIT OF CERTIORARI FILED: JUNE 22, 2015**
**CERTIORARI GRANTED: OCTOBER 19, 2015**

## TABLE OF CONTENTS


Page

Court of Appeals docket entries ..... 1
District Court docket entries ..... 12
U.S. Patent No. 6,022,329 ..... 35
U.S. Patent No. 6,179,807 ..... 109
U.S. Patent No. 7,144,383 ..... 191
Stryker InterPulse brochure ..... 275
Stryker Surgilav Plus brochure ..... 278
PulsaJet business case ..... 279
H.M. Design meeting minutes (Jan. 25, 1999) ..... 333
H.M. Design meeting minutes (Jan. 29, 1999) ..... 348
H.M. Design meeting minutes (Feb. 17, 1999) ..... 353
'504 patent application file history (Excerpt) ..... 359
'504 patent application prosecution history (Docket entry No. 439, Attachment 4) (Excerpt) ..... 371
Zimmer Pulsavac Plus wound debridement family brochure ..... 386
Joint claim construction statement for disputed claim terms (Docket Entry No. 61) ..... 392
Zimmer's responses to Stryker's infringement contentions regarding the '807 patent (Docket entry No. 159, Attachment 5) ..... 399
Order regarding Stryker's motion for partial summary judgement of infringement (Docket entry No. 247) (Excerpt) ..... 403

Order denying Zimmer's motion for summary judgement of invalidity of claims 45 and 50-52 of U.S. patent No. 6,179,807 under 35 U.S.C. § 102(b) (Excerpt) (Docket entry No. 249) ..... 405

Disputed proposed jury instruction No. 26 (Docket entry No. 337) ..... 409

Transcript of jury trial proceedings held January 15-February 5, 2013 (Docket entry Nos. 356 *et seq.*) (Excerpts) ..... 416

Joint stipulation regarding deposition testimony presented at trial (Docket entry No. 458 and Attachment 1) (Excerpt) ..... 465

Verdict form (Docket entry No. 381) ..... 468

Final judgment and permanent injunction (Docket entry No. 546) ..... 482

The following opinions and orders have been omitted in printing this joint appendix because they appear on the following pages in the appendix to the petition for a writ of certiorari:

Appendix A — Order denying rehearing (Mar. 23, 2015) ..... 1a
Appendix B — Amended court of appeals opinion (Mar. 23, 2015) ..... 3a
Appendix C — Court of appeals opinion (Dec. 19, 2014) ..... 26a
Appendix D — District court order regarding post-verdict motions (Aug. 7, 2013) ..... 49a
Appendix E — District court order regarding Stryker's motion for partial summary judgment (Nov. 29, 2012) ..... 123a
Appendix F — District court claim construction memorandum opinion and order (Feb. 1, 2012) ..... 135a

UNITED STATES COURT OF APPEALS
FOR THE FEDERAL CIRCUIT

---

No. 13-1668

*Stryker Corporation, Stryker Puerto Rico, Ltd., Stryker Sales Corporation,*
Plaintiffs-Appellees

*v.*

*Zimmer, Inc., and Zimmer Surgical, Inc.,*
Defendants-Appellants

*Zimmer Orthopaedic Surgical Products,*
Defendant.

---

Filed: September 23, 2013

---

**Docket Entries**

| DATE | DOCKET NUMBER | PROCEEDINGS |
|---|---|---|
| 09/23/2013 | 1 | Appeal docketed. Received: 09/19/2013. [105516] |
| | | * * * * * |
| 01/22/2014 | 19 | BRIEF FILED for Appellants Zimmer Surgical, Inc. and Zimmer, Inc. [18]. Title: Brief for Defendants-Appellants Zimmer, Inc. and Zimmer Surgical, Inc., [Non-Confidential version only]. Number of Pages: 71. Service: 01/21/2014 by email.. Pursuant to ECF-10, filer is directed to file six copies of the brief in paper format. The paper copies of the brief should be received by the court on or before 01/29/2014. Appellees Stryker Corporation, Stryker Puerto Rico, Ltd. and Stryker Sales Corporation brief is due 03/06/2014. [131330] |
| | | * * * * * |
| 3/19/2014 | 24 | BRIEF FILED for Appellees Stryker Corporation, Stryker Puerto Rico, Ltd. and Stryker Sales Corporation [23]. Title: Brief of Appellees, [Non-Confidential version only]. Number of Pages: 89. Service: |

| DATE | DOCKET NUMBER | PROCEEDINGS |
|---|---|---|
| | | 03/19/2014 by email. Pursuant to ECF-10, filer is directed to file six copies of the brief in paper format. The paper copies of the brief should be received by the court on or before 03/25/2014. Appellants Zimmer Surgical, Inc. and Zimmer, Inc. reply brief is due 04/07/2014. [142829] |
| | | * * * * * |
| 04/28/2014 | 29 | BRIEF FILED for Appellants Zimmer Surgical, Inc. and Zimmer, Inc. [28]. Title: Reply Brief for Appellant, Zimmer, Inc. and Zimmer Surgical, Inc., [Non-Confidential version only]. Number of Pages: 37. Service: 04/28/2014 by email.. Pursuant to ECF-10, filer is directed to file six copies of the brief in paper format. The paper copies of the brief should be received by the court on or before 05/05/2014. Appendix is due 05/08/2014. [151420] |
| | | * * * * * |
| 05/05/2014 | 32 | Citation of Supplemental Authority pursuant to Fed. R. App. P. 28(j) for Appellees Stryker Corporation, Stryker Puerto |

| DATE | DOCKET NUMBER | PROCEEDINGS |
|---|---|---|
| | | Rico, Ltd. and Stryker Sales Corporation. Service: 05/05/2014 by email. [152387] |
| | | * * * * * |
| 05/12/2014 | 39 | RESPONSE of Appellants Zimmer Surgical, Inc. and Zimmer, Inc. to the supplemental authority [32] filed by Appellees Stryker Corporation, Stryker Sales Corporation and Stryker Puerto Rico, Ltd. in 13-1668. Service: 05/12/2014 by email. [153791] |
| | | * * * * * |
| 05/14/2014 | 43 | APPENDIX FILED for Zimmer Surgical, Inc. and Zimmer, Inc. [42], [41]. Title: Joint Appendix (3 Volumes), [Confidential and Non-Confidential versions]. Number of Pages: 530. Service: 05/14/2014 by email.. Pursuant to ECF-10, filer is directed to file six copies of the brief in paper format. (The conf. version of this appendix has been replaced. See entry #46) [156312] |
| | | * * * * * |

| DATE | DOCKET NUMBER | PROCEEDINGS |
|---|---|---|
| 05/23/2014 | 46 | APPENDIX FILED for Zimmer Surgical, Inc. and Zimmer, Inc. [45]. Title: Joint Appendix (3 Volumes), [Confidential Only version]. Number of Pages: 1302. Service: 05/23/2014 by email.. Pursuant to ECF-10, filer is directed to file six copies of the brief in paper format. The paper copies of the brief should be received by the court on or before 06/02/2014. [157276] |
| | | * * * * * |
| 05/30/2014 | 48 | MOTION of Appellees Stryker Corporation, Stryker Puerto Rico, Ltd. and Stryker Sales Corporation to file a supplemental brief. Response/Opposition is due 06/12/2014 [Consent: opposed]. Service: 05/30/2014 by email. [158064] |
| | | * * * * * |
| 06/18/2014 | 52 | RESPONSE of Appellants Zimmer Surgical, Inc. and Zimmer, Inc. to the motion to file supplemental brief [48] filed by Appellees Stryker Corporation, Stryker Sales Corporation and Stryker Puerto Rico, Ltd. |

| DATE | DOCKET NUMBER | PROCEEDINGS |
|---|---|---|
| | | in 13-1668. Service: 06/18/2014 by email. [162257] |
| 06/25/2014 | 53 | REPLY of Appellees Stryker Corporation, Stryker Puerto Rico, Ltd. and Stryker Sales Corporation to response filed by Appellants in 13-1668 , Doc. No [52]. Service: 06/25/2014 by email. [163548] |
| 06/30/2014 | 54 | ORDER filed denying [48] motion to file supplemental brief filed by Stryker Corporation, Stryker Sales Corporation and Stryker Puerto Rico, Ltd. without prejudice to the merits panel assigned to hear this case requesting supplemental briefing if appropriate.; and granting motion to extend time to file a response [49] filed by Appellants Zimmer, Inc. and Zimmer Surgical, Inc. Service: 06/30/2014 by clerk. [164333] |
| | | * * * * * |
| 09/08/2014 | 61 | Submitted after ORAL ARGUMENT by Mr. Donald Robert Dunner for Zimmer, Inc. and Zimmer Surgical, Inc. and Miss Sharon Hwang for Stryker Corporation, Stryker Sales Corpo- |

| DATE | DOCKET NUMBER | PROCEEDINGS |
|---|---|---|
| | | ration and Stryker Puerto Rico, Ltd..<br>Panel: Judge: Prost , Judge: Newman , Judge: Hughes. [180631] |
| | | * * * * * |
| 12/19/2014 | 66 | OPINION and JUDGMENT filed. The judgment or decision is: affirmed-in=part, reversed-in-part, vacated-in-part, and remanded. (Precedential Opinion). (For the Court: Prost,Chief Judge; Newman,Circuit Judge and Hughes,Circuit Judge). [205222] Withdrawn pursuant to the court's order. See Doc. No. [84] |
| | | * * * * * |
| 01/20/2015 | 72 | Petition for en banc rehearing filed by Appellees Stryker Corporation, Stryker Puerto Rico, Ltd. and Stryker Sales Corporation. Service: 01/20/2015 by email. [210990] |
| | | * * * * * |
| 01/22/2015 | 74 | The court invites a response from Appellants Zimmer Surgical, Inc. and Zimmer, Inc. to the petition for en banc rehearing |

| DATE | DOCKET NUMBER | PROCEEDINGS |
|---|---|---|
| | | filed by Appellees in 13-1668.. [211789] |
| | | * * * * * |
| 02/05/2015 | 76 | RESPONSE of Appellants Zimmer Surgical, Inc. and Zimmer, Inc. to the petition for en banc rehearing [72] filed by Appellees Stryker Corporation, Stryker Sales Corporation and Stryker Puerto Rico, Ltd. in 13-1668. Service: 02/05/2015 by email. [215450] |
| 02/10/2015 | 77 | MOTION of Appellees Stryker Corporation, Stryker Puerto Rico, Ltd. and Stryker Sales Corporation for leave to file a response/reply to [76] response. Response/Opposition is due 02/23/2015 [Consent: opposed]. Service: 02/10/2015 by email. [216443] |
| 02/10/2015 | 78 | REPLY of Appellees Stryker Corporation, Stryker Puerto Rico, Ltd. and Stryker Sales Corporation to response filed by Appellants in 13-1668 , Doc. No [76]. Service: 02/10/2015 by email. [216444] |

| DATE | DOCKET NUMBER | PROCEEDINGS |
|---|---|---|

* * * * *

| | | |
|---|---|---|
| 02/18/2015 | 81 | ORDER filed granting motion to file a response/reply [77] filed by Appellees Stryker Corporation, Stryker Sales Corporation and Stryker Puerto Rico, Ltd.. By: Merits Panel (Per Curiam). Service as of this date by Clerk of Court. [218113] |
| 02/19/2015 | 82 | RESPONSE of Appellants Zimmer Surgical, Inc. and Zimmer, Inc. to the motion to file a response/reply [77] filed by Appellees Stryker Corporation, Stryker Sales Corporation and Stryker Puerto Rico, Ltd. in 13-1668. Service: 02/19/2015 by email. [218357] |
| 02/23/2015 | 83 | CORRECTED ORDER: correcting court order [81]; reason(s): Opposition filed. Service as of this date by Clerk of Court. |
| 03/23/2015 | 84 | ORDER filed granting panel rehearing for limited purpose; withdrawing the Precedential Opinion [66]. By: Merits Panel (Per Curiam). Service as of this date by Clerk of Court. [226332] |

| DATE | DOCKET NUMBER | PROCEEDINGS |
|---|---|---|
| 03/23/2015 | 85 | OPINION and JUDGMENT filed. The judgment or decision is: Affirmed-in-Part, Reversed-in-Part, Vacated-in-Part, Remanded. (Precedential Opinion). (For the Court: Prost,Chief Judge; Newman,Circuit Judge and Hughes,Circuit Judge). [226338] |
| 03/23/2015 | 86 | ORDER filed denying [72] petition for en banc rehearing filed by Stryker Corporation, Stryker Sales Corporation and Stryker Puerto Rico, Ltd. By: En Banc (Per Curiam). Service as of this date by Clerk of Court. [226342] |
| 03/24/2015 | 87 | ERRATA to the Precedential Opinion Doc No.: [85]. Service as of this date by Clerk of Court. [226762] |
| | | * * * * * |
| 06/24/2015 | 89 | Petition for writ of Certiorari filed on 06/22/2015 in the Supreme Court of the United States. Supreme Court #: 14-1520, Stryker Corporation v. Inc. Zimmer. [251992] |

| DATE | DOCKET NUMBER | PROCEEDINGS |
|---|---|---|
| | | * * * * * |
| 10/19/2015 | 93 | The petition for writ of certiorari, [14-1520], filed on 06/22/2015, was Granted on 10/19/2015. The petition for a writ of certiorari in no. 14-1513 is granted limited to Question 1 presented by the petition. The cases are consolidated and a total of one hour is allotted for oral argument. [282062]--[Edited 10/26/2015 by SJ to correct docket text] |

UNITED STATES DISTRICT COURT
WESTERN DISTRICT OF MICHIGAN
SOUTHERN DIVISION

---

No. 10-cv-01223

*Stryker Corporation, Stryker Puerto Rico, Ltd., Stryker Sales Corporation,*
Plaintiffs

v.

*Zimmer, Inc., Zimmer Orthopaedic Surgical Products, and Zimmer Surgical, Inc.,*
Defendants

---

Filed: December 10, 2010

---

**Docket Entries**

| DATE | DOCKET NUMBER | PROCEEDINGS |
|---|---|---|
| | | * * * * * |
| 11/07/2011 | 66 | BRIEF by counter-defendants Stryker Corporation, Stryker Puerto Rico, Ltd., Stryker Sales Corporation, plaintiffs Stryker Corporation, Stryker Puerto Rico, Ltd., Stryker Sales Corporation *"Plaintiff Stryker's Opening Markman Brief"* (Gass, David) (Entered: 11/07/2011) |
| | | * * * * * |
| 12/05/2011 | 76 | MARKMAN BRIEF on claim construction issues submitted for filing by defendants Zimmer Inc., Zimmer Orthopaedic Surgical Products, counter-claimants Zimmer Inc., Zimmer Orthopaedic Surgical Products *Defendant Zimmer's Responsive Markman Brief - Public Redacted Version* (Brausa, Adam) (Entered: 12/05/2011) |
| | | * * * * * |
| 12/19/2011 | 86 | MARKMAN BRIEF on claim construction issues submitted for filing by plaintiffs Stryker Corporation, Stryker Puerto Rico, Ltd., Stryker Sales Corporation *"Plaintiff Stryker's Reply Markman Brief"* (Portinga, D.) |

| DATE | DOCKET NUMBER | PROCEEDINGS |
|---|---|---|
| | | (Entered: 12/19/2011) |
| | | * * * * * |
| 02/01/2012 | 106 | CLAIM CONSTRUCTION MEMORANDUM OPINION AND ORDER; signed by Judge Robert J. Jonker (Judge Robert J. Jonker, mil) (Entered: 02/01/2012) |
| | | * * * * * |
| 07/31/2012 | 156 | MOTION for partial summary judgment of infringement by counter-defendants Stryker Corporation, Stryker Puerto Rico, Ltd., Stryker Sales Corporation, plaintiffs Stryker Corporation, Stryker Puerto Rico, Ltd., Stryker Sales Corporation; (Portinga, D.) Modified text on 8/11/2012 (gjf). (Entered: 07/31/2012) |
| | | * * * * * |
| 07/31/2012 | 165 | MOTION for summary judgment *of Non-Infringement of U.S. Patent No. 6,022,329* by defendants Zimmer Inc., Zimmer Orthopaedic Surgical Products, counter-claimants Zimmer Inc., Zimmer Orthopaedic Surgical Products; (Hales, Bryan) (En- |

| DATE | DOCKET NUMBER | PROCEEDINGS |
|---|---|---|
| | | tered: 07/31/2012) |
| | | * * * * * |
| 07/31/2012 | 170 | MOTION for summary judgment of *Invalidity of Claims 45 and 50-52 of U.S. Patent No. 6,179,807* by defendants Zimmer Inc., Zimmer Orthopaedic Surgical Products, counter-claimants Zimmer Inc., Zimmer Orthopaedic Surgical Products; (Hales, Bryan) (Entered: 07/31/2012) |
| | | * * * * * |
| 08/28/2012 | 211 | RESPONSE in opposition to MOTION for summary judgment *of Non-Infringement of U.S. Patent No. 6,022,329* 165 filed by Stryker Corporation, Stryker Puerto Rico, Ltd., Stryker Sales Corporation (Portinga, D.) (Entered: 08/28/2012) |
| | | * * * * * |
| 08/28/2012 | 215 | RESPONSE in opposition to MOTION for summary judgment *of Invalidity of Claims 45 and 50-52 of U.S. Patent No. 6,179,807* 170 filed by Stryker Corporation, Stryker Puerto Ri- |

| DATE | DOCKET NUMBER | PROCEEDINGS |
|---|---|---|
| | | co, Ltd., Stryker Sales Corporation (Portinga, D.) (Entered: 08/28/2012) |
| | | * * * * * |
| 08/28/2012 | 225 | RESPONSE in opposition to MOTION for summary judgment 156 *Zimmer's Opposition to Stryker's Motion for Partial Summary Judgment of Infringement* filed by Zimmer Inc., Zimmer Orthopaedic Surgical Products (Attachments: #1 Exhibit A, #2 Exhibit B, #3 Exhibit C, #4 Exhibit C, #4 Exhibit D, #5 Exhibit E)(Hales, Bryan) (Entered: 08/28/2012) |
| | | * * * * * |
| 09/11/2012 | 231 | REPLY to response to motion 156 *for partial summary judgment of infringement* filed by Stryker Corporation, Stryker Puerto Rico, Ltd., Stryker Sales Corporation (Paul, Justin) (Entered: 09/11/2012) |
| 09/11/2012 | 232 | REPLY to response to motion 170 *for Summary Judgment of Invalidity of Claims 45 and 50-52 of U.S. Patent No. 6,179,807* filed by Zimmer Inc., Zimmer |

| DATE | DOCKET NUMBER | PROCEEDINGS |
|---|---|---|
| | | Orthopaedic Surgical Products (Hales, Bryan) (Entered: 09/11/2012) |
| | | * * * * * |
| 09/11/2012 | 236 | REPLY to response to motion 165 *for Summary Judgment of Non-Infringement of U.S. Patent No. 6,022,329* filed by Zimmer Inc., Zimmer Orthopaedic Surgical Products (Attachments: # 1 Exhibit 1 in Support of Reply Brief, # 2 Exhibit 2 in Support of Reply Brief, # 3 Exhibit 3 in Support of Reply Brief, # 4 Exhibit 4 in Support of Reply Brief)(Hales, Bryan) (Entered: 09/11/2012) |
| | | * * * * * |
| 11/29/2012 | 247 | ORDER granting in part and denying in part 156 motion for summary judgment; signed by Judge Robert J. Jonker (Judge Robert J. Jonker, ymc) Modified text on 12/12/2012; see 254 for revision (kvt). (Entered: 11/29/2012) |
| 11/29/2012 | 248 | ORDER denying 165 motion for summary judgment; signed by Judge Robert J. Jonker (Judge |

| DATE | DOCKET NUMBER | PROCEEDINGS |
|---|---|---|
| | | Robert J. Jonker, ymc) (Entered: 11/29/2012) |
| 11/29/2012 | 249 | ORDER denying 170 motion for summary judgment; signed by Judge Robert J. Jonker (Judge Robert J. Jonker, ymc) (Entered: 11/29/2012) |
| | | * * * * * |
| 12/07/2012 | 254 | ORDER granting motion to clarify 252 re 247; the Court GRANTS Plaintiff's Motion to Clarify. The Court's earlier Order 247 is REVISED to read as proposed in the Motion to Clarify, and in particular to GRANT Plaintiff's Motion for Summary Judgment of infringement on Claim 10 of the '383 Patent, as well as the other Claims originally included in the Order 247 ; signed by Judge Robert J. Jonker (Judge Robert J. Jonker, ymc) (Entered: 12/07/2012) |
| | | * * * * * |
| 02/01/2013 | 377 | NOTICE: Court's Final Version of the Jury Instructions and Verdict Form; signed by Judge Robert J. Jonker (Attachments: #1 Attachment Jury Instruc- |

| DATE | DOCKET NUMBER | PROCEEDINGS |
|---|---|---|
| | | tions, #2 Attachment Verdict Form) (Judge Robert J. Jonker, ymc) (Entered: 02/01/2013) |
| | | * * * * * |
| 02/05/2013 | 381 | JURY VERDICT (gjf) (Entered: 02/05/2013) |
| | | * * * * * |
| 03/22/2013 | 396 | MOTION for permanent injunction *or, in the Alternative, an Ongoing Royalty* by counter-defendants Stryker Corporation, Stryker Puerto Rico, Ltd., Stryker Sales Corporation, plaintiffs Stryker Corporation, Stryker Puerto Rico, Ltd., Stryker Sales Corporation; (Portinga, D.) (Entered: 03/22/2013) |
| | | * * * * * |
| 03/22/2013 | 401 | MOTION for judgment as a matter of law *Zimmer's Post-Trial Motion No. 3 for Judgment as a Matter of Law of Invalidity of Claim 2 of U.S. Patent No. 6,022,329, Or in the Alternative, For a New Trial* by defendants Zimmer Orthopaedic Surgical Products, Zimmer, Inc., counter-claimants Zimmer |

| DATE | DOCKET NUMBER | PROCEEDINGS |
|---|---|---|
| | | Orthopaedic Surgical Products, Zimmer, Inc.; (Hales, Bryan) (Entered: 03/22/2013) |
| | | * * * * * |
| 03/22/2013 | 405 | MOTION for order *for Enhanced Damages* by counter-defendants Stryker Corporation, Stryker Puerto Rico, Ltd., Stryker Sales Corporation, plaintiffs Stryker Corporation, Stryker Puerto Rico, Ltd., Stryker Sales Corporation; (Portinga, D.) (Entered: 03/22/2013) |
| | | * * * * * |
| 03/22/2013 | 410 | MOTION for order *for a Finding of Exceptional Case and for an Award of Attorneys' Fees* by counter-defendants Stryker Corporation, Stryker Puerto Rico, Ltd., Stryker Sales Corporation, plaintiffs Stryker Corporation, Stryker Puerto Rico, Ltd., Stryker Sales Corporation; (Portinga, D.) (Entered: 03/22/2013) |
| | | * * * * * |
| 03/22/2013 | 425 | MOTION for judgment as a matter of law *Zimmer's Post-* |

| DATE | DOCKET NUMBER | PROCEEDINGS |
|---|---|---|
| | | *Trial Motion No. 4 for Judgment as a Matter of Law of Non-Infringement of Claim 2 of U.S. Patent No. 6,022,329, Or in the Alternative, For a New Trial* by defendants Zimmer Orthopaedic Surgical Products, Zimmer, Inc., counter-claimants, Zimmer Orthopaedic Surgical Products, Zimmer, Inc.; (Hales, Bryan) (Entered: 03/22/2013) |
| | | * * * * * |
| 03/22/2013 | 435 | MOTION for new trial *Zimmer's Post-Trial Motion No. 9 for a New Trial* by defendants Zimmer Orthopaedic Surgical Products, Zimmer, Inc., counter-claimants Zimmer Orthopaedic Surgical Products, Zimmer, Inc.; (Hales, Bryan) (Entered: 03/22/2013) |
| | | * * * * * |
| 03/22/2013 | 438 | MOTION for judgment as a matter of law *Zimmer's Post-Trial Motion No. 2 for Judgment as a Matter of Law of Invalidity of the Asserted Claims of U.S. Patent No. 7,144,383, Or in the Alternative, For a New* |

| DATE | DOCKET NUMBER | PROCEEDINGS |
|---|---|---|
| | | *Trial* by defendants Zimmer Orthopaedic Surgical Products, Zimmer, Inc., counter-claimants Zimmer Orthopaedic Surgical Products, Zimmer, Inc.; (Hales, Bryan) (Entered: 03/22/2013) |
| | | * * * * * |
| 03/22/2013 | 442 | MOTION for judgment as a matter of law *Zimmer's Post-Trial Motion No. 1 for Judgment as a Matter of Law of Invalidity of Claims 45 and 50-52 of U.S. Patent No. 6,179,807, Or in the Alternative, For a New Trial* by defendants Zimmer Orthopaedic Surgical Products, Zimmer, Inc., counter-claimants Zimmer Orthopaedic Surgical Products, Zimmer, Inc.; (Hales, Bryan) (Entered: 03/22/2013) |
| | | * * * * * |
| 03/22/2013 | 447 | MOTION for judgment as a matter of law *Zimmer's Post-Trial Motion No. 5 for Judgment as a Matter of Law of No Willful Infringement* by defendants Zimmer Orthopaedic Surgical Products, Zimmer, Inc., counter-claimants Zimmer Orthopaedic Surgical Products, |

| DATE | DOCKET NUMBER | PROCEEDINGS |
|---|---|---|
| | | Zimmer, Inc.; (Hales, Bryan) (Entered: 03/22/2013) |
| | | * * * * * |
| 04/19/2013 | 460 | RESPONSE in opposition to Zimmer's Post-Trial MOTION No. 9 for a New Trial 435 filed by Stryker Corporation, Stryker Puerto Rico, Ltd., Stryker Sales Corporation (Volger, Gregory) Modified text on 4/22/2013 (gjf). (Entered: 04/19/2013) |
| | | * * * * * |
| 04/19/2013 | 475 | RESPONSE in opposition to Zimmer's Post-Trial MOTION No. 3 for Judgment as a Matter of Law of Invalidity of Claim 2 of U.S. Patent No. 6,022,329, Or in the Alternative, For a New Trial 401 filed by Stryker Corporation, Stryker Puerto Rico, Ltd., Stryker Sales Corporation (Attachments: # 1 PTX 1, # 2 PTX 13, # 3 PTX 18, # 4 PTX 21, # 5 PTX 23)(Vogler, Gregory) Modified text on 4/22/2013 (gjf). (Entered: 04/19/2013) |
| | | * * * * * |
| 04/19/2013 | 482 | RESPONSE in opposition to Zimmer's Post-Trial MOTION |

| DATE | DOCKET NUMBER | PROCEEDINGS |
|---|---|---|
| | | No. 1 for Judgment as a Matter of Law of Invalidity of Claims 45 and 50-52 of U.S. Patent No. 6,179,807, Or in the Alternative, For a New Trial 442 filed by Stryker Corporation, Stryker Puerto Rico, Ltd., Stryker Sales Corporation (Attachments: # 1 PTX 2, # 2 PTX 9, # 3 PTX 13, # 4 PTX 21, # 5 PTX 23)(Vogler, Gregory) Modified text on 4/22/2013 (gjf). (Entered: 04/19/2013) |
| | | * * * * * |
| 04/19/2013 | 486 | RESPONSE in opposition to Zimmer's Post-Trial MOTION No. 2 for Judgment as a Matter of Law of Invalidity of the Asserted Claims of U.S. Patent No. 7,144,383, Or in the Alternative, For a New Trial 438 filed by Stryker Corporation, Stryker Puerto Rico, Ltd., Stryker Sales Corporation (Attachments: # 1 PTX 1, # 2 PTX 3, # 3 PTX 13, # 4 PTX 14, # 5 PTX 18)(Vogler, Gregory) Modified text on 4/22/2013 (gjf). (Entered: 04/19/2013) |
| | | * * * * * |

| DATE | DOCKET NUMBER | PROCEEDINGS |
|---|---|---|
| 04/19/2013 | 491 | RESPONSE in opposition to Zimmer's MOTION No. 4 for Judgment as a Matter of Law of Non-Infringement of Claim 2 of U.S. Patent No. 6,022,329, Or in the Alternative, For a New Trial 425 filed by Stryker Corporation, Stryker Puerto Rico, Ltd., Stryker Sales Corporation (Attachments: # 1 PTX 1, # 2 PTX 8, # 3 PTX 9, # 4 PTX 15 - Part 1, # 5 PTX 15 - Part 2)(Vogler, Gregory) Modified text on 4/22/2013 (gjf). (Entered: 04/19/2013) |
| | | * * * * * |
| 04/19/2013 | 495 | RESPONSE in opposition to MOTION for permanent injunction *or, in the Alternative, an Ongoing Royalty* 396 filed by Zimmer Orthopaedic Surgical Products, Zimmer, Inc. (Attachments: # 1 Exhibit 205, # 2 Exhibit AGA, # 3 Exhibit AGB)(Hales, Bryan) (Entered: 04/19/2013) |
| 04/19/2013 | 496 | RESPONSE in opposition to Zimmer's MOTION No. 5 for Judgment as a Matter of Law of No Willful Infringement 447 filed by Stryker Corporation, |

| DATE | DOCKET NUMBER | PROCEEDINGS |
|---|---|---|
| | | Stryker Puerto Rico, Ltd., Stryker Sales Corporation (Attachments: # 1 PTX 1, # 2 PTX 2, # 3 PTX 3, # 4 PTX 13)(Vogler, Gregory) Modified text on 4/22/2013 (gjf). (Entered: 04/19/2013) |
| | | * * * * * |
| 04/19/2013 | 501 | RESPONSE in opposition to MOTION for order *for Enhanced Damages* 405 *Under 35 U.S.C. § 284* filed by Zimmer Orthopaedic Surgical Products, Zimmer, Inc. (Attachments: # 1 Exhibit AGD, # 2 Exhibit 1, # 3 Exhibit 2, # 4 Exhibit 3, # 5 Exhibit 14)(Hales, Bryan) (Entered: 04/19/2013) |
| | | * * * * * |
| 04/19/2013 | 505 | RESPONSE in opposition to MOTION for order *for a Finding of Exceptional Case and for an Award of Attorneys' Fees* 410 *Under 35 U.S.C § 285* filed by Zimmer Orthopaedic Surgical Products, Zimmer, Inc. (Attachments: # 1 Exhibit AGD, # 2 Exhibit AE, # 3 Exhibit 15, # 4 Exhibit 9A, # 5 Exhibit QF)(Hales, Bryan) (Entered: |

| DATE | DOCKET NUMBER | PROCEEDINGS |
|---|---|---|
| | | 04/19/2013) |
| | | * * * * * |
| 05/03/2013 | 519 | REPLY to response to motion 401 *Zimmer's Reply in Support of Its Post-Trial Motion No. 3 for Judgment as a Matter of Law of Invalidity of Claim 2 of U.S. Patent No. 6,022,329, Or in the Alternative, For a New Trial* filed by Zimmer Orthopaedic Surgical Products, Zimmer, Inc. (Attachments: # 1 Exhibit AEG-12) (Hales, Bryan) (Entered: 05/03/2013) |
| 05/03/2013 | 520 | REPLY to response to motion 396 *for a permanent injunction or, in the alternative, an ongoing royalty* filed by Stryker Corporation, Stryker Puerto Rico, Ltd., Stryker Sales Corporation (Attachments: # 1 Exhibit PTX 2, # 2 Exhibit PTX 23, # 3 Exhibit PTX 41, # 4 Exhibit PTX 42 (labeled as PTX 41), # 5 Exhibit PTX 61)(Vogler, Gregory) Modified text on 5/6/2013 (gjf). (Entered: 05/03/2013) |
| | | * * * * * |

| DATE | DOCKET NUMBER | PROCEEDINGS |
|---|---|---|
| 05/03/2013 | 522 | REPLY to response to motion 425 *Zimmer's Reply in Support of Its Post-Trial Motion No. 4 for Judgment as a Matter of Law of Non-Infringement of Claim 2 of U.S. Patent No. 6,022,329, Or in the Alternative, For a New Trial* filed by Zimmer Orthopaedic Surgical Products, Zimmer, Inc. (Attachments: # 1 Exhibit 1, # 2 Exhibit AE, # 3 Exhibit QB, Ex. E)(Hales, Bryan) (Entered: 05/03/2013) |
| 05/03/2013 | 523 | REPLY to response to motion 438 *Zimmer's Reply in Support of Its Post-Trial Motion No. 2 for Judgment as a Matter of Law of Invalidity of the Asserted Claims of U.S. Patent No. 7,144,383, Or in the Alternative, For a New Trial* filed by Zimmer Orthopaedic Surgical Products, Zimmer, Inc. (Attachments: # 1 Exhibit 3, # 2 Exhibit IB, # 3 Exhibit T, # 4 Exhibit Y, # 5 Exhibit QF)(Hales, Bryan) (Entered: 05/03/2013) |
| | | * * * * * |
| 05/03/2013 | 525 | REPLY to response to motion 442 *Zimmer's Reply in Support* |

| DATE | DOCKET NUMBER | PROCEEDINGS |
|---|---|---|
| | | *of Its Post-Trial Motion No. 1 for Judgment as a Matter of Law of Invalidity of Claims 45 and 50-52 of U.S. Patent No. 6,179,807, Or in the Alternative, For a New Trial* filed by Zimmer Orthopaedic Surgical Products, Zimmer, Inc. (Attachments: # 1 Exhibit 9, # 2 Exhibit 2, # 3 Exhibit ACM, # 4 Exhibit ADC, # 5 Exhibit PW)(Hales, Bryan) (Entered: 05/03/2013) |
| | | * * * * * |
| 05/03/2013 | 527 | REPLY to response to motion 435 *Zimmer's Reply in Support of Its Post-Trial Motion No. 9 for a New Trial* filed by Zimmer Orthopaedic Surgical Products, Zimmer, Inc. (Attachments: # 1 Exhibit AGV)(Hales, Bryan) (Entered: 05/03/2013) |
| 05/03/2013 | 528 | REPLY to response to motion 405 *for enhanced damages* filed by Stryker Corporation, Stryker Puerto Rico, Ltd., Stryker Sales Corporation (Attachments: # 1 Exhibit PTX 14, # 2 Exhibit PTX 15 - Part 1, # 3 Exhibit PTX 15 - Part 2, # 4 Exhibit PTX 23, # 5 Exhibit DTX |

| DATE | DOCKET NUMBER | PROCEEDINGS |
|---|---|---|
| | | KS)(Vogler, Gregory) (Entered: 05/03/2013) |
| 05/03/2013 | 529 | REPLY to response to motion 410 *for a finding of an exceptional case and an award of attorneys' fees* filed by Stryker Corporation, Stryker Puerto Rico, Ltd., Stryker Sales Corporation (Attachments: # 1 Exhibit PTX 15 - Part 1, # 2 Exhibit PTX 15 - Part 2, # 3 Exhibit PTX 23, # 4 Exhibit DTX KS)(Vogler, Gregory) (Entered: 05/03/2013) |
| 05/03/2013 | 530 | REPLY to response to motion 447 *Zimmer's Reply in Support of Its Post-Trial Motion No. 5 for Judgment as a Matter of Law of No Willful Infringement* filed by Zimmer Orthopaedic Surgical Products, Zimmer, Inc. (Attachments: # 1 Exhibit 15, # 2 Exhibit AE, # 3 Exhibit QF)(Hales, Bryan) (Entered: 05/03/2013) |
| | | * * * * * |
| 08/07/2013 | 537 | ORDER denying 369 motion for judgment as a matter of law; granting 396 motion for permanent injunction; granting 399 |

| DATE | DOCKET NUMBER | PROCEEDINGS |
|---|---|---|
| | | motion for order; denying 401 motion for judgment as a matter of law; granting 405 motion for order, granting 410 motion for order; granting 414 motion for order; denying 418 motion for entry of judgment ; denying 425 motion for judgment as a matter of law; denying 430 motion for judgment as a matter of law; denying 435 motion for new trial; denying 438 motion for judgment as a matter of law; denying 442 motion for judgment as a matter of law; denying 447 motion for judgment as a matter of law; denying 453 motion for judgment as a matter of law; granting 534 motion to strike ; signed by Judge Robert J. Jonker (Judge Robert J. Jonker, ymc) (Entered: 08/07/2013) |
| | | * * * * * |
| 09/05/2013 | 546 | FINAL JUDGMENT and PERMANENT INJUNCTION in favor of Stryker Corporation, Stryker Puerto Rico, Ltd, and Stryker Sales Corporation against Zimmer Inc. and Zimmer Surgical, Inc.; signed by |

| DATE | DOCKET NUMBER | PROCEEDINGS |
|---|---|---|
| | | Judge Robert J. Jonker (Judge Robert J. Jonker, ymc) (Entered: 09/05/2013) |
| | | * * * * * |
| 09/19/2013 | 555 | NOTICE OF APPEAL to the Federal Circuit Court of Appeals re 546 by defendants Zimmer Orthopaedic Surgical Products, Zimmer, Inc., counter-claimants Zimmer Orthopaedic Surgical Products, Zimmer, Inc. (Hales, Bryan) (Entered: 09/19/2013) |
| | | * * * * * |
| 09/19/2013 | 559 | MOTION for attorney fees */Petition for an Award of Attorneys' Fees Under 35 USC 285 and Expert Fees* by plaintiffs Stryker Corporation, Stryker Puerto Rico, Ltd., Stryker Sales Corporation; (Vogler, Gregory) (Entered: 09/19/2013) |
| | | * * * * * |
| 12/19/2014 | 569 | JUDGMENT of Federal Circuit Court of Appeals re appeal 555 *AFFIRMED-IN-PART, REVERSED-IN-PART, VACATED-IN-PART, AND REMANDED (mandate to issue)* |

| DATE | DOCKET NUMBER | PROCEEDINGS |
|---|---|---|
| | | (kvt) (Entered: 01/27/2015) |
| | | * * * * * |
| 03/23/2015 | 574 | REVISED OPINION and ORDER of Federal Circuit Court of Appeals re appeal 555 *affirmed-in-part, reversed-in-part, vacated-in-part, and remanded; mandate to issue* (pjw) Modified text on 3/24/2015 (pjw). Modified text on 3/25/2015 (cmi). (Entered: 03/24/2015) |
| 03/24/2015 | 575 | ERRATA *from the United States Court of Appeals for the Federal Circuit regarding Opinion and Order 574* (pjw) Modified document link on 3/25/2015 (pjw). (Entered: 03/25/2015) |
| | | * * * * * |
| 05/18/2015 | 580 | ORDER granting PROPOSED AMENDED FINAL JUDGMENT AND PERMANENT INJUNCTION 579; signed by Judge Robert J. Jonker (Judge Robert J. Jonker, ymc) (Entered: 05/18/2015) |
| | | * * * * * |

| DATE | DOCKET NUMBER | PROCEEDINGS |
|---|---|---|
| 10/21/2015 | 591 | NOTICE of *Supreme Court Order Granting Certiorari* by plaintiffs Stryker Corporation, Stryker Puerto Rico, Ltd., Stryker Sales Corporation (Attachments: # 1 Exhibit A) (Hwang, Sharon) (Entered: 10/21/2015) |

* * * * *

# The United States of America

## The Commissioner of Patents and Trademarks

*Has received an application for a patent for a new and useful invention. The title and description of the invention are enclosed. The requirements of law have been complied with, and it has been determined that a patent on the invention shall be granted under the law.*

*Therefore, this*

## United States Patent

*Grants to the person(s) having title to this patent the right to exclude others from making, using, offering for sale, or selling the invention throughout the United States of America or importing the invention into the United States of America for the term set forth below, subject to the payment of maintenance fees as provided by law.*

*If this application was filed prior to June 8, 1995, the term of this patent is the longer of seventeen years from the date of grant of this patent or twenty years from the earliest effective U.S. filing date of the application, subject to any statutory extension.*

*If this application was filed on or after June 8, 1995, the term of this patent is twenty years from the U.S. filing date, subject to any statutory extension. If the application contains a specific reference to an earlier filed application or applications under 35 U.S.C. 120, 121 or 365(c), the term of the patent is twenty years from the date on which the earliest application was filed, subject to any statutory extension.*

J. Todd Dickinson

Commissioner of Patents and Trademarks

Attest M. Peterson

**NOTICE**

*If the application for this patent was filed on or after December 12, 1980, maintenance fees are due three years and six months, seven years and six months, and eleven years and six months after the date of this grant, or within a grace period of six months thereafter upon payment of a surcharge as provided by law. The amount, number and timing of the maintenance fees required may be changed by law or regulation. Unless payment of the applicable maintenance fee is received in the Patent and Trademark Office on or before the date the fee is due or within a grace period of six months thereafter, the patent will expire as of the end of such grace period.*

US006022329A

# United States Patent [19]

Arnett et al.

[11] Patent Number: 6,022,329

[45] Date of Patent: *Feb. 8, 2000

[54] IRRIGATION HANDPIECE WITH BUILT IN PULSING PUMP

[75] Inventors: Jeffrey D. Arnett, Kalamazoo; Nicholas V. Gulsby, Portage; David R. Grellar, Battle Creek; Ruth A. Hibbins, Delton; James L. Hovis, Kalamazoo, all of Mich.

[73] Assignee: Stryker Corporation, Kalamazoo, Mich.

[*] Notice: This patent is subject to a terminal disclaimer.

[21] Appl. No.: 08/909,687

[22] Filed: Jan. 30, 1998

Related U.S. Application Data

[63] Continuation of application No. 08/399,133, Mar. 17, 1995, Pat. No. 5,718,684, which is a continuation of application No. 08/049,344, Apr. 19, 1988, Pat. No. 5,470,305.

[51] Int. Cl.[7] ..... A61M 3/00

[52] U.S. Cl. ..... 604/159; 239/526; 239/379; 604/35; 604/153; 604/43; 604/161

[58] Field of Search ..... 604/154, 155, 604/180, 164, 302, 143, 185; 604/33, 35, 39, 43, 155; 128/DIG. 10, DIG. 12; 433/80, 74/325, 327, 328, 409; 239/522, 332.2, 291.1; 239/525, 526, 373; 222/333

[56] References Cited

U.S. PATENT DOCUMENTS

| | | |
|---|---|---|
| 589,239 | 11/1897 | Gustafson . |
| 908,466 | 4/1908 | Schroeder . |
| 736,503 | 8/1903 | Weiser . |
| 792,309 | 3/1905 | Bellinger . |
| 1,317,891 | 10/1919 | Aaron . |
| 1,505,239 | 8/1924 | Pfirrmann . |
| 1,520,807 | 3/1925 | Schulte . |
| 1,846,506 | 2/1932 | Hamberg . |
| 2,012,888 | 9/1935 | Lowry . |
| 2,112,029 | 3/1938 | Lloyd . |
| 2,139,433 | 12/1938 | Bellinger . |

(List continued on next page.)

FOREIGN PATENT DOCUMENTS

| | | |
|---|---|---|
| 0 278 906 | 8/1988 | European Pat. Off. |
| 1 325 930 | 8/1963 | France . |
| 24 16 089 | 4/1975 | Germany . |
| WO94/15820 | 8/1994 | Japan . |
| 1 264 138 | 2/1972 | United Kingdom . |
| 2 085 434A | 4/1982 | United Kingdom . |
| WO81/00794 | 3/1981 | WIPO . |
| WO81/02235 | 8/1981 | WIPO . |
| WO85/05982 | 9/1985 | WIPO . |
| WO88/08947 | 4/1988 | WIPO . |
| WO89/12830 | 8/1989 | WIPO . |
| WO90/01508 | 12/1990 | WIPO . |
| WO90/17771 | 9/1990 | WIPO . |
| WO94/13351 | 6/1994 | WIPO . |
| WO94/27771 | 12/1994 | WIPO . |

OTHER PUBLICATIONS

Pulsavac, Operations Manual Pulsatile Lavage Debridement System (15 sheets) Jan. 1983 Stryker Laboratories, Inc. Dover, Ohio 44622.

(List continued on next page.)

*Primary Examiner*—Denise D. DeMille
*Attorney, Agent, or Firm*—Flynn, Thiel, Boutell & Tanis, P.C.

[57] ABSTRACT

A pulsed irrigation handpiece comprises a pulsed irrigation liquid outlet for applying liquid pulses to a surgical site, a pump unit reciprocatingly drivable for pumping pulses of irrigation liquid through the outlet, an electric powered drive unit for reciprocatingly driving the pump unit, and a housing containing the pump and drive units. A irrigation inlet hose leads from the pump unit out of the handpiece housing and is connectable to a source irrigation liquid source. An irrigation inlet hose adjacent the source and thereof and electric conductors extending along the irrigation inlet hose transfer electric power from the supply unit to the drive unit in the handpiece. Removable tips are alternatively removably attachable to the irrigation liquid outlet adjacent the front end of the handpiece.

10 Claims, 17 Drawing Sheets

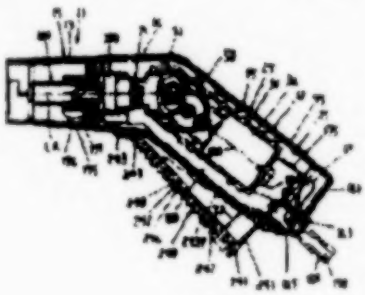

U.S. PATENT DOCUMENTS


| | | |
|---|---|---|
| 2,197,995 | 4/1940 | Crowley |
| 2,243,299 | 5/1941 | Brown |
| 2,494,088 | 1/1950 | Dalby |
| 2,531,399 | 11/1950 | Sokol |
| 3,595,494 | 3/1952 | Schroeder |
| 3,634,885 | 4/1953 | Heath |
| 3,682,489 | 12/1972 | Riley |
| 2,684,049 | 7/1954 | Hollis |
| 2,727,678 | 12/1955 | Henderson |
| 2,753,113 | 2/1956 | Kalbach |
| 2,781,134 | 2/1957 | Meredith |
| 2,802,666 | 8/1957 | Thorne |
| 2,847,087 | 8/1958 | Fox |
| 2,874,886 | 2/1959 | Bond |
| 2,908,371 | 10/1959 | Hearne |
| 2,993,654 | 7/1961 | Nestor |
| 3,004,288 | 9/1961 | Pendleton |
| 3,014,627 | 12/1961 | Hines et al. |
| 3,039,372 | 6/1962 | Peck |
| 3,066,663 | 7/1962 | Anderson et al. |
| 3,048,121 | 8/1962 | Sweeney |
| 3,078,089 | 12/1962 | Dark |
| 3,135,259 | 6/1964 | Brown |
| 3,227,138 | 1/1966 | Montagh |
| 3,237,388 | 3/1966 | Stuart |
| 3,263,643 | 8/1966 | Carpenter |
| 3,270,571 | 1/1967 | Smith |
| 3,316,845 | 5/1967 | Schneider |
| 3,373,557 | 11/1967 | Kaye et al. |
| 3,399,599 | 12/1967 | Johnson et al. |
| 3,393,671 | 7/1968 | Montagh |
| 3,416,387 | 12/1968 | VanDenkel et al. |
| 3,425,410 | 2/1969 | Dunsmuir |
| 3,438,743 | 2/1969 | Clawson et al. |
| 3,448,746 | 6/1969 | Schmidt |
| 3,452,746 | 7/1969 | Blankenship |
| 3,464,121 | 12/1969 | Quarton |
| 3,508,548 | 6/1970 | Rogers et al. |
| 3,515,130 | 6/1970 | Teague |
| 3,561,433 | 2/1971 | Kovach |
| 3,601,464 | 8/1971 | Brown |
| 3,675,556 | 09/1971 | Bohannon |
| 3,675,607 | 1/1972 | Opsvig |
| 3,653,377 | 4/1972 | Rebold |
| 3,702,141 | 11/1972 | Whitehouse |
| 3,713,339 | 1/1973 | Runnells |
| 3,731,641 | 5/1973 | Lloyd et al. |
| 3,731,876 | 5/1973 | Rebold |
| 3,762,641 | 10/1973 | Lloyd et al. |
| 3,765,602 | 10/1973 | Lowenstein et al. |
| 3,768,472 | 10/1973 | Richards et al. |
| 3,771,522 | 11/1973 | Wagner et al. |
| 3,784,235 | 1/1974 | Kessler et al. |
| 3,790,031 | 2/1974 | Nixon |
| 3,857,345 | 12/1974 | Bonah |
| 3,864,383 | 1/1975 | Kovach |
| 3,883,074 | 5/1975 | Lambert |
| 3,888,743 | 5/1975 | Wagner |
| 3,940,753 | 4/1976 | Dunkleman |
| 3,949,934 | 4/1976 | Rosenberg |
| 3,982,549 | 9/1976 | Ross |
| 3,988,566 | 10/1976 | Wilmoth |
| 3,993,884 | 11/1976 | Nemeth |
| 4,007,750 | 2/1977 | Ross et al. |
| 4,018,695 | 4/1977 | Yang |
| 4,020,998 | 5/1977 | Troughton |
| 4,044,342 | 12/1977 | Tuttle |
| 4,111,391 | 9/1978 | Pfeifle |
| 4,123,594 | 10/1978 | Chesebro et al. |
| 4,205,876 | 6/1980 | Humphrey et al. |
| 4,213,476 | 7/1980 | Armstrong |
| 4,248,569 | 2/1981 | Lewis |
| 4,259,879 | 2/1981 | Tassel |
| 4,257,416 | 3/1981 | Prager |
| 4,257,547 | 3/1981 | Wennemann |
| 4,253,726 | 6/1981 | Sokol |
| 4,256,025 | 6/1981 | Phillips et al. |
| 4,270,078 | 5/1981 | Smith |
| 4,282,847 | 8/1981 | De Toni |
| 4,288,454 | 9/1981 | Binder |
| 4,294,251 | 10/1981 | Cannavedi et al. |
| 4,308,748 | 11/1981 | Kendry |
| 4,313,099 | 2/1982 | Smith |
| 4,334,540 | 2/1982 | Phillips et al. |
| 4,348,869 | 9/1982 | Mayfield |
| 4,358,477 | 9/1982 | Bond |
| 4,395,289 | 7/1983 | McCullough |
| 4,434,010 | 1/1984 | McCullough |
| 4,434,035 | 1/1984 | Hanson |
| 4,438,345 | 1/1984 | Burbach et al. |
| 4,438,348 | 1/1984 | Peyton et al. |
| 4,438,495 | 3/1984 | McCullough |
| 4,440,819 | 3/1984 | Walling |
| 4,449,827 | 5/1984 | Kuhlmann |
| 4,451,599 | 5/1984 | Mahon |
| 4,468,258 | 7/1984 | Bonneville et al. |
| 4,468,225 | 8/1984 | Mayfield |
| 4,472,120 | 9/1984 | McCullough |
| 4,483,345 | 11/1984 | Chow et al. |
| 4,484,909 | 11/1984 | Leroy |
| 4,489,720 | 12/1984 | Rehring |
| 4,493,684 | 1/1985 | Wentworth |
| 4,502,588 | 3/1985 | Ross |
| 4,508,532 | 4/1985 | Brown et al. |
| 4,509,507 | 4/1985 | Yoho |
| 4,512,668 | 4/1985 | McCullough |
| 4,515,532 | 5/1985 | Walling |
| 4,519,505 | 5/1985 | Adkisson et al. |
| 4,526,572 | 7/1985 | Lanier et al. |
| 4,535,773 | 8/1985 | Yoon |
| 4,537,182 | 8/1985 | Glass |
| 4,551,389 | 8/1985 | Jain |
| 4,552,120 | 11/1985 | Kinsdale |
| 4,558,457 | 11/1985 | Williams et al. |
| 4,561,431 | 12/1985 | Adkisson |
| 4,561,856 | 12/1985 | Coulson |
| 4,588,336 | 4/1986 | Campbell et al. |
| 4,593,331 | 6/1986 | Monahan |
| 4,598,749 | 6/1986 | Rheng et al. |
| 4,596,388 | 6/1986 | Smith et al. |
| 4,604,719 | 7/1986 | Moll |
| 4,604,089 | 8/1986 | Bomengale et al. |
| 4,634,420 | 1/1987 | Spinosa et al. |
| 4,636,197 | 4/1987 | Adkisson |
| 4,655,366 | 4/1987 | Thistle et al. |
| 4,660,724 | 4/1987 | Richmond |
| 4,665,705 | 4/1987 | Bond |
| 4,669,320 | 5/1987 | Mahong |
| 4,667,655 | 5/1987 | Ogle et al. |
| 4,682,643 | 5/1987 | Chow |
| 4,686,648 | 8/1987 | Monhanan |
| 4,700,580 | 10/1987 | Bulanda et al. |
| 4,744,878 | 5/1988 | Mahong |
| 4,748,970 | 6/1988 | Mahgoun |
| 4,784,668 | 8/1988 | Bulanda et al. |
| 4,788,668 | 8/1988 | Bonanda et al. |
| 4,795,040 | 10/1988 | Pyatov et al. |
| 4,799,481 | 1/1989 | Thomas, et al. |
| 4,817,588 | 4/1989 | Dunn |
| 4,872,837 | 10/1989 | Isaacson et al. |
| 4,890,600 | 1/1990 | McCullough et al. |
| 4,941,481 | 7/1990 | McCullough et al. |

| | | | |
|---|---|---|---|
| 4,925,450 | 5/1990 | Inoue et al. | |
| 4,927,340 | 5/1990 | McCullough | |
| 4,995,889 | 6/1990 | Hanna | |
| 4,941,872 | 7/1990 | Pollis et al. | |
| 4,957,483 | 9/1990 | Gonzalez et al. | |
| 4,973,302 | 12/1990 | Pu et al. | |
| 4,982,739 | 1/1991 | Hausmann et al. | |
| 5,015,235 | 5/1991 | Landis | |
| 5,046,486 | 9/1991 | Chaffee et al. | |
| 5,049,671 | 9/1991 | Davis et al. | |
| 5,053,008 | 10/1991 | Bodicker | |
| 5,098,387 | 3/1992 | Hlavin et al. | |
| 5,120,305 | 6/1992 | Bontempo et al. | |
| 5,147,323 | 9/1992 | Lasting | |
| 5,190,779 | 12/1992 | Glucksberg | |
| 5,176,627 | 1/1993 | Kalfas et al. | |
| 5,186,714 | 2/1993 | Bonnebaum et al. | |
| 5,188,591 | 2/1993 | Dorsey, III | |
| 5,195,959 | 3/1993 | Smith | |
| 5,197,649 | 3/1993 | Bessler | |
| 5,209,709 | 4/1993 | Clement et al. | |
| 5,234,409 | 7/1993 | Bonnebaum et al. | |
| 5,261,905 | 11/1993 | Doresqe, III | |
| 5,269,730 | 12/1993 | Gaither et al. | |
| 5,295,956 | 3/1994 | Baker et al. | |
| 5,308,318 | 5/1994 | Weldon | |
| 5,322,503 | 6/1994 | Desai | |
| 5,336,230 | 8/1994 | Hollister et al. | |
| 5,391,145 | 2/1995 | Dorsey | |
| 5,470,305 | 11/1995 | Aznoni et al. | |
| 5,484,402 | 1/1996 | Saravia et al. | |
| 5,544,649 | 8/1996 | Wallstein et al. | |
| 5,562,640 | 10/1996 | McCabe et al. | |
| 5,573,508 | 11/1996 | Dorsey, III | |
| 5,584,577 | 12/1996 | Dorsey, III | |
| 5,711,668 | 2/1998 | Azzoni et al. | |

OTHER PUBLICATIONS

Davol Instruction for Use, Simpulse™ Suction/Irrigator (2 sheets) Davol Inc. 800 Sockanosett Crossroad Cranston, R I 02920 Jan. 1995.

Copy of photos of Bibicon, photos of Pfizer, Valley Lambs (10 photos) Jan. 25, 1993.

Duo-™ Minimal Access Surgery System, Introducing the VAC-™ Handcontrolled Suction Irrigation Instrument. Combined Aspen Surgical Systems. Created Jul. 1992, 10M

DAVOL—Hydro-Flo™ Irrigator Bard, Davol Inc.; instruction booklet 004102-0, 9811R, Nov. 1998.

Peristalic Lavage Debridement System, brochure No. 82-010-5150-0346/2.5M CESS Zimmer Inc., Snyder Labs Inc. 1982

Suction/Irrigation Is No Longer An Issue. Hydro-Dissection System. 556529 PP 8/34 Jul. 1992. Karl Storz Lambda & Co. Tuttlingen West Germany.

A Fully Integrated Laparoscopic Irrigation and Instrumentation System, Cabot Medical, Langhorne PA Apr. 1992. 10M L/T (4 sheets)

Advances in Pulsatility, The Irrigation Pump System, Cabot Medical Langhorne, PA Apr. 1990 (3 sheets).

InteSERT™, Fluid Management System User's Manual, Smith & Nephew Dyonics Inc. copyright 1992, PN10080170

Davol, Arthro-Flo®, Instructions For Use, 020457-0 9018, C.R. Bard, Inc. Cranston RI. Jan. 1990.

Davol, Arthro-Flo High-Flo Irrigator, Bard, (IP--AF0015080 Aug. 1992 5M C.R. Bard Inc. Cranston, RI.

3M Fluid Control System, For Precise Control of all Arthroscopic Procedures, 70-2006-5458-9, 1992 3M.

Davol Simpulse-™ Suction/Irrigator, BARD, 054089-0 (2 sheets) Jan. 1985.

U.S. Patent Feb. 8, 2000 Sheet 1 of 17 6,022,329

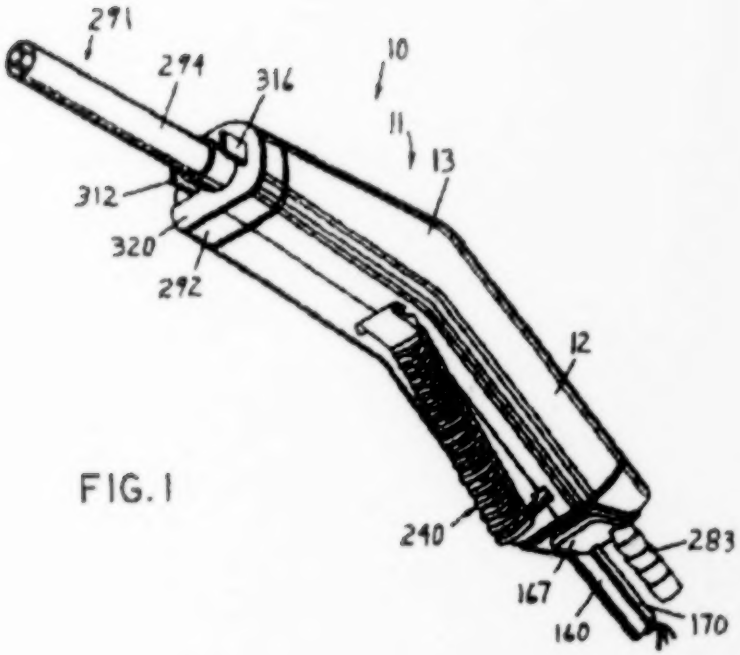


FIG. 1

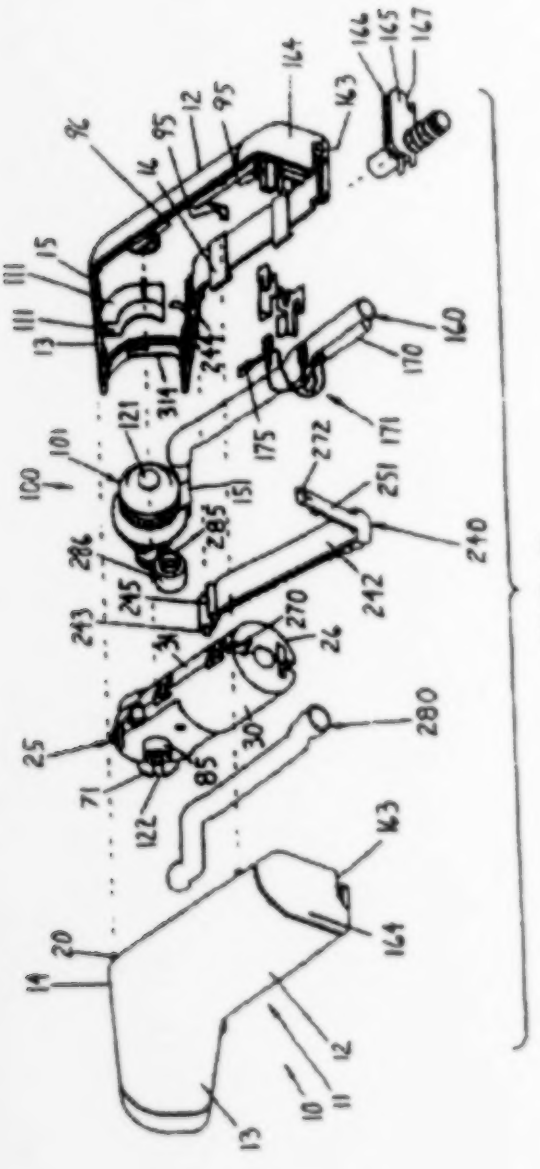

96
16
95
12
95
164
163
166
165
167
15
111
111
13
244
314
160
170
171
175
121
101
100
151
272
251
240
285
286
245
242
243
270
26
31
25
30
85
71
122
280
163
164
20
14
12
11
10
13


FIG. 2

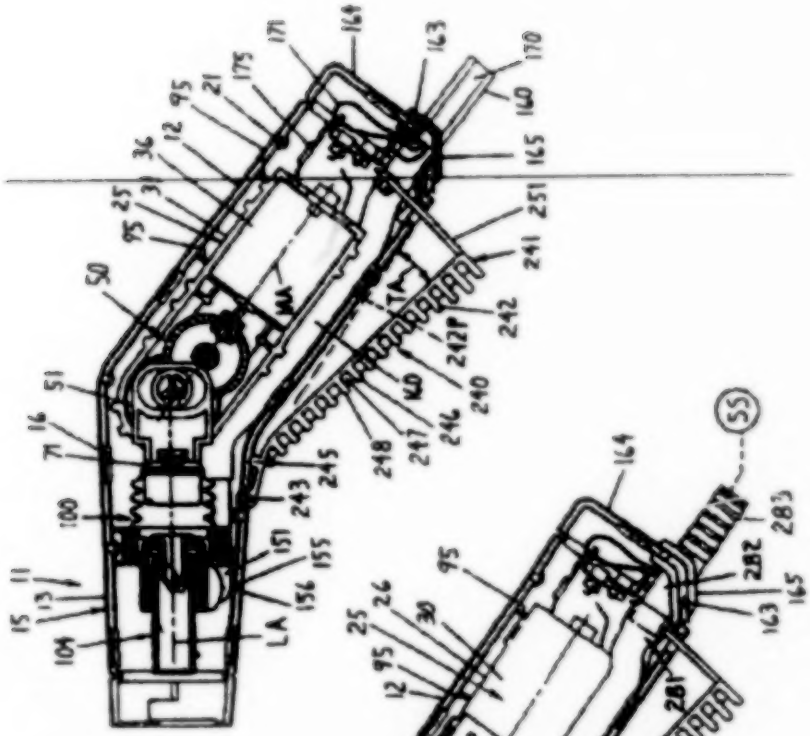

FIG. 4

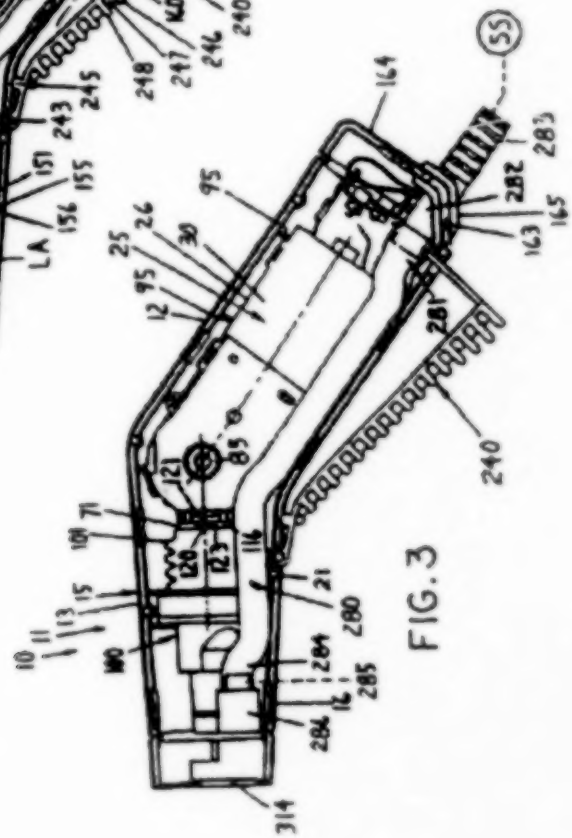

FIG. 3

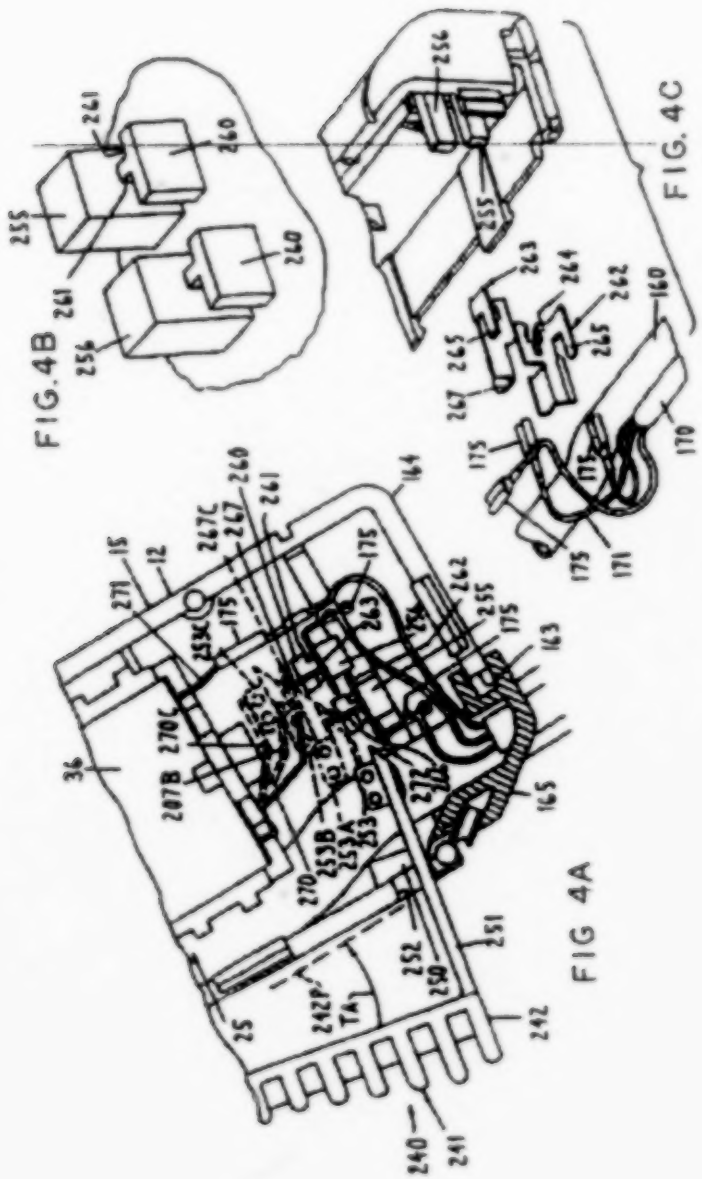
FIG. 4B
FIG. 4C
FIG 4A

FIG. 5

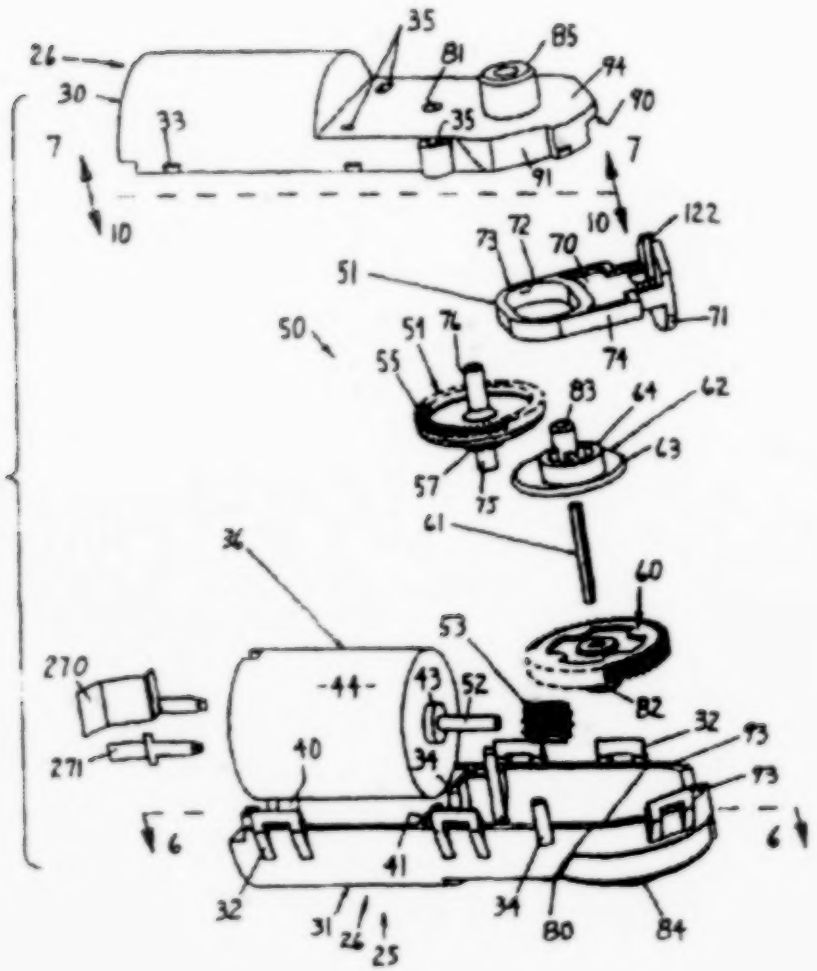
26
30
33
35
81
85
94
90
35
91
7
7
10
10
122
73
72
70
51
71
74
50
51
76
55
83
64
62
63
57
75
61
36
60
53
82
270
-44-
43
52
32
93
271
40
34
93
6
6
41
32
31
26
25
34
80
84

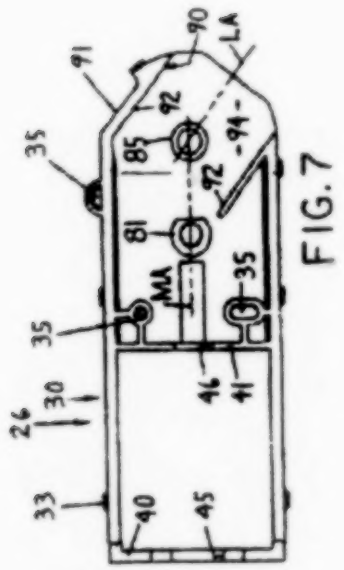


FIG. 7

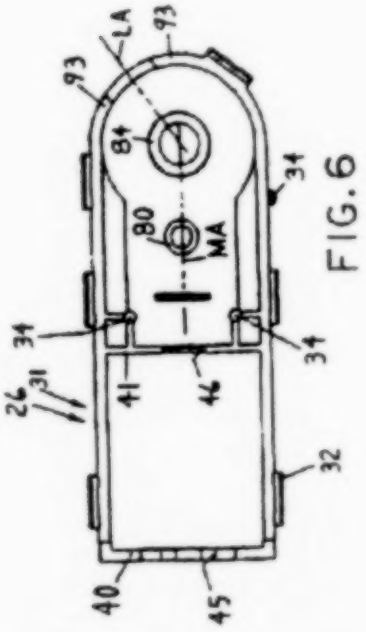


FIG. 6

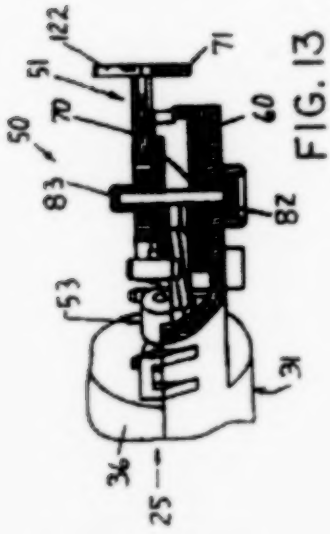


FIG. 13

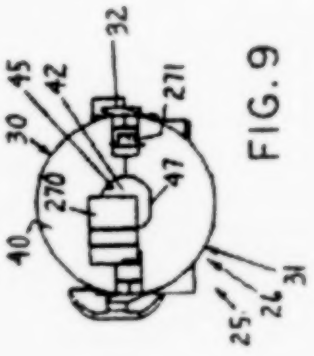


FIG. 9

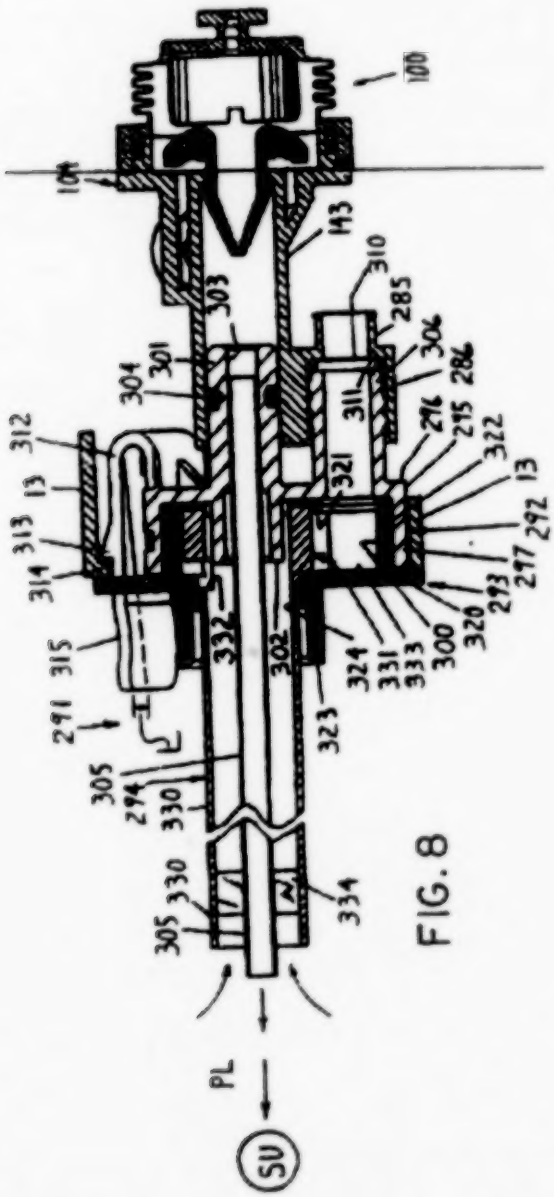
100
104
143
310
285
306
286
311
296
295
322
13
292
297
293
320
300
333
331
324
323
302
332
321
303
301
304
312
13
313
314
315
291
305
294
330
330
305
334
PL
SU

FIG. 8

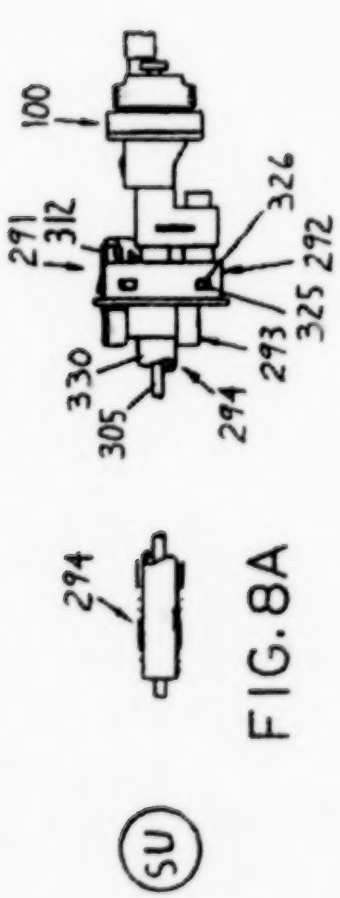
100
291
312
326
292
325
293
330
305
294
294
SU

FIG. 8A

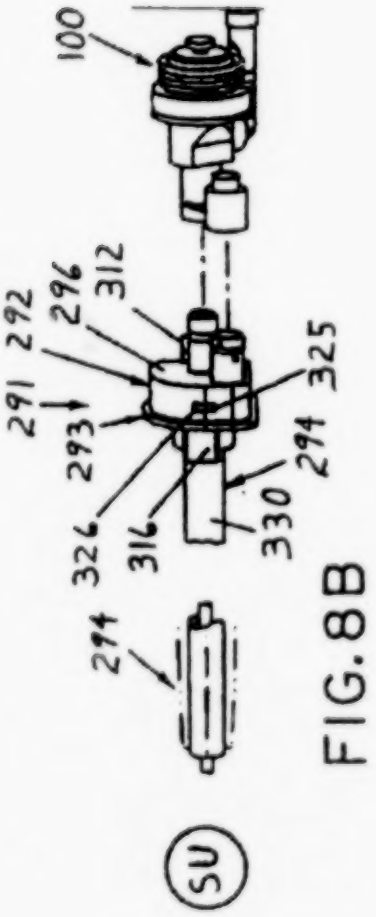
100
291
292
296
312
325
293
294
326
316
330
294
SU

FIG. 8B

U.S. Patent Feb. 8, 2000 Sheet 9 of 17 6,022,329

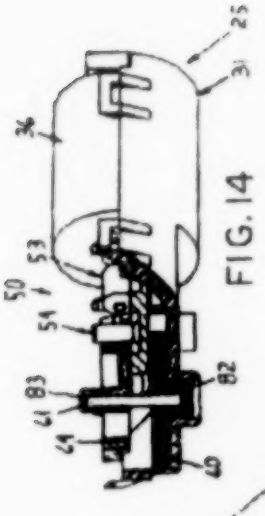

FIG. 14

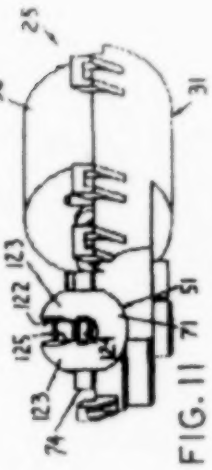

FIG. 11

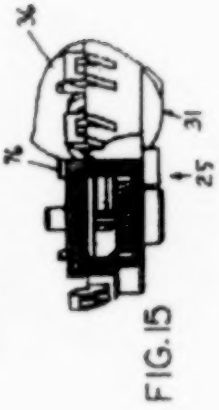

FIG. 15

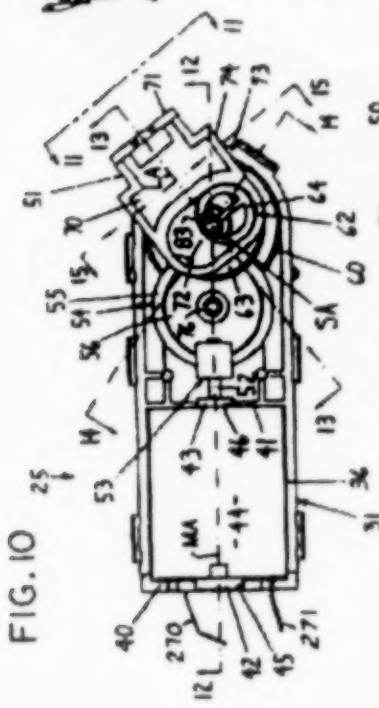

FIG. 10

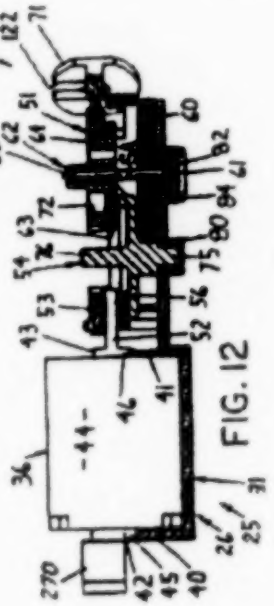

FIG. 12

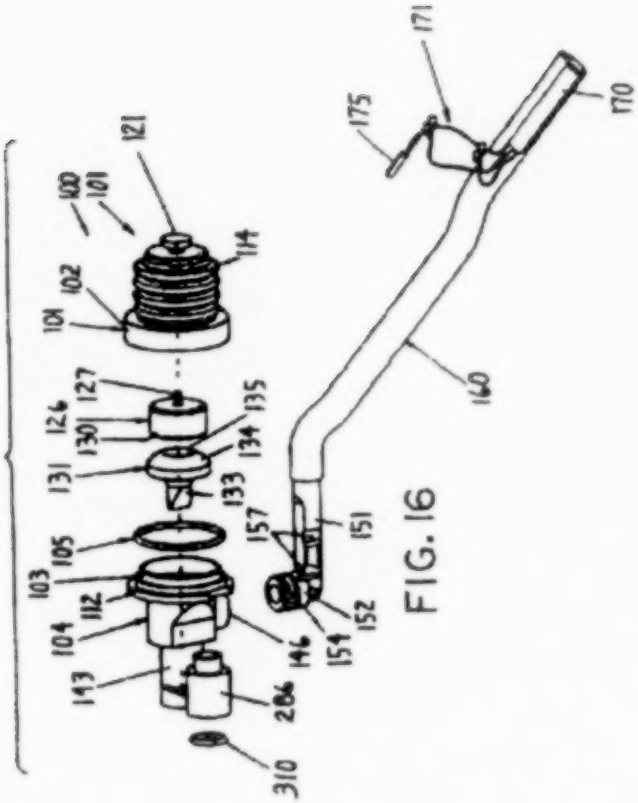
171
175
170
121
400
101
114
102
101
140
127
126
135
130
134
131
133
157
151
105
103
112
152
104
154
146
143
286
310

FIG. 16

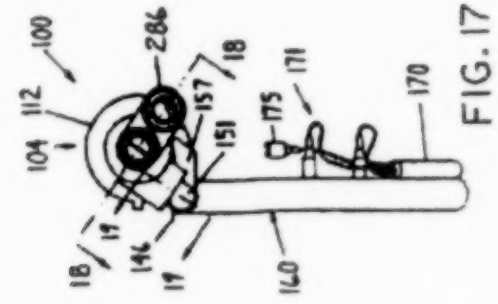
100
286
18
112
157
171
104
151
175
170
19
146
18
19
140

FIG. 17

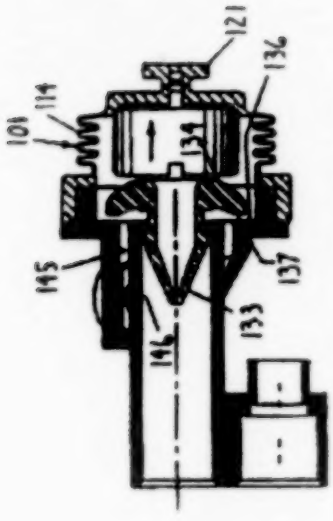


FIG. 18A

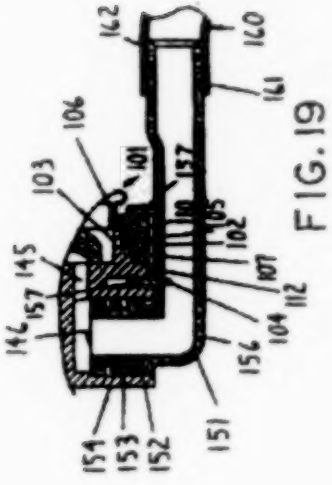


FIG. 19

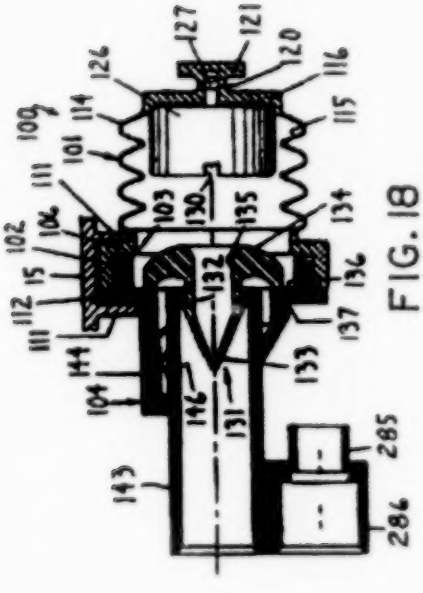


FIG. 18

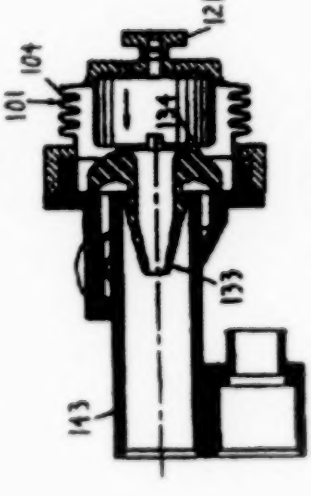


FIG. 18B

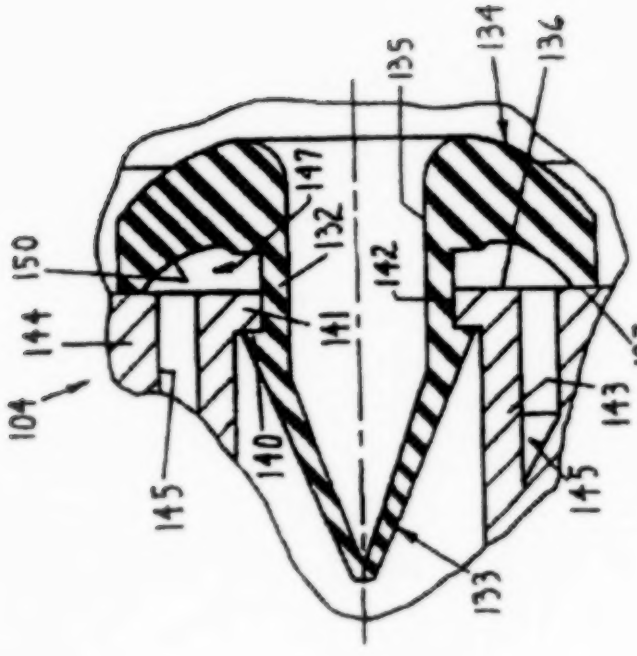


FIG. 18C

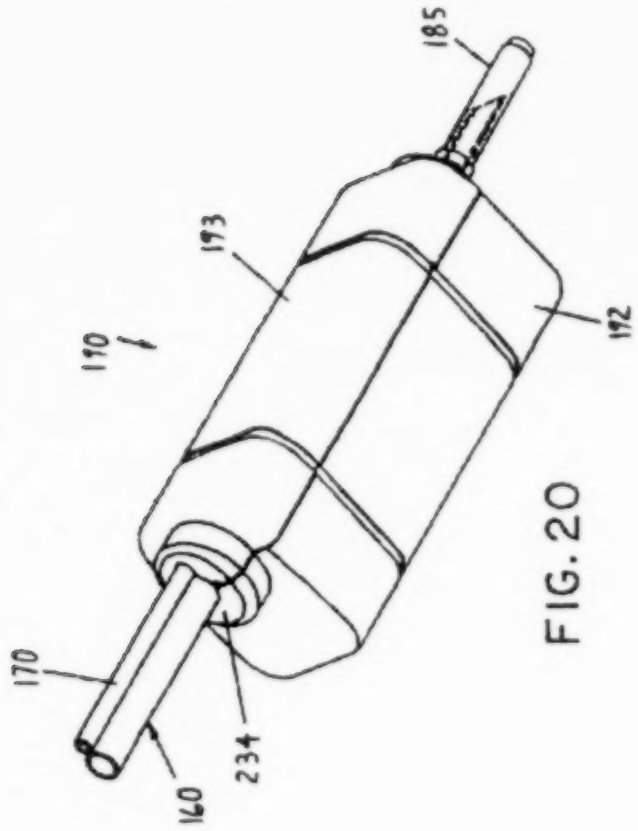


FIG. 20

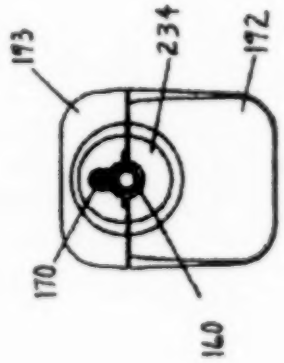


FIG. 21

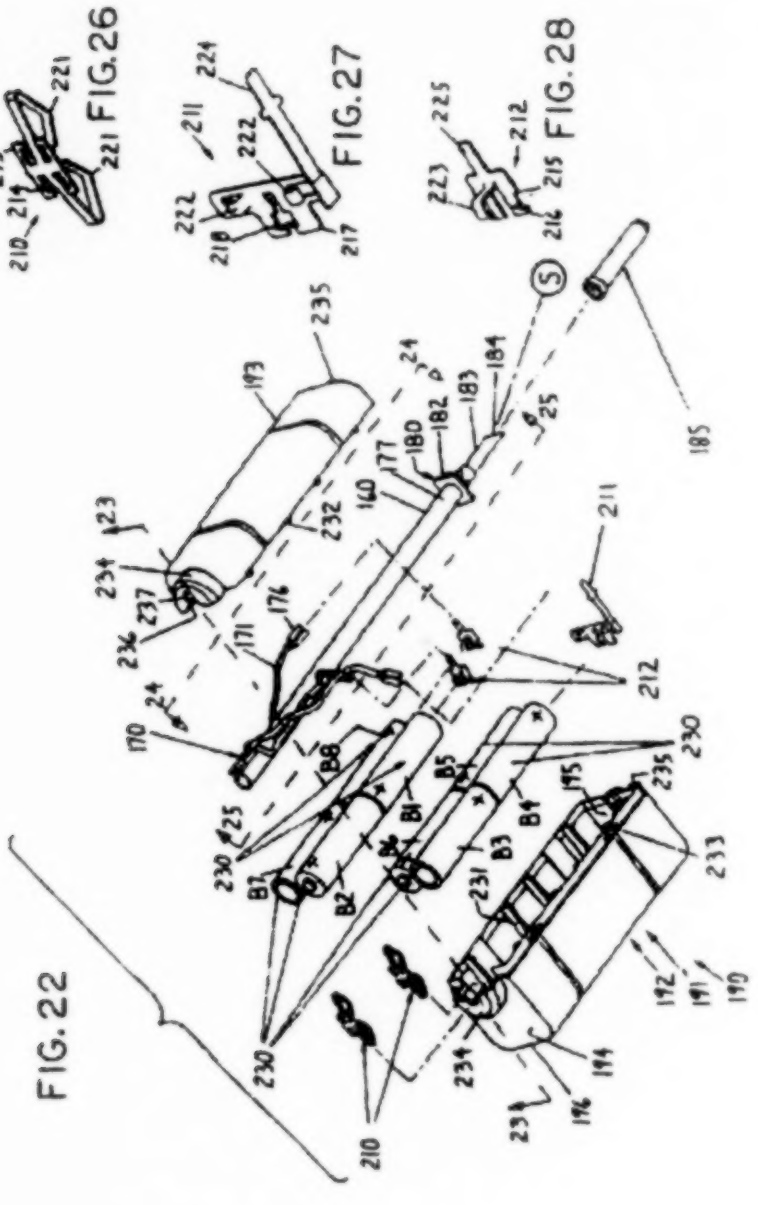
FIG.26
FIG.27
FIG.28
FIG. 22

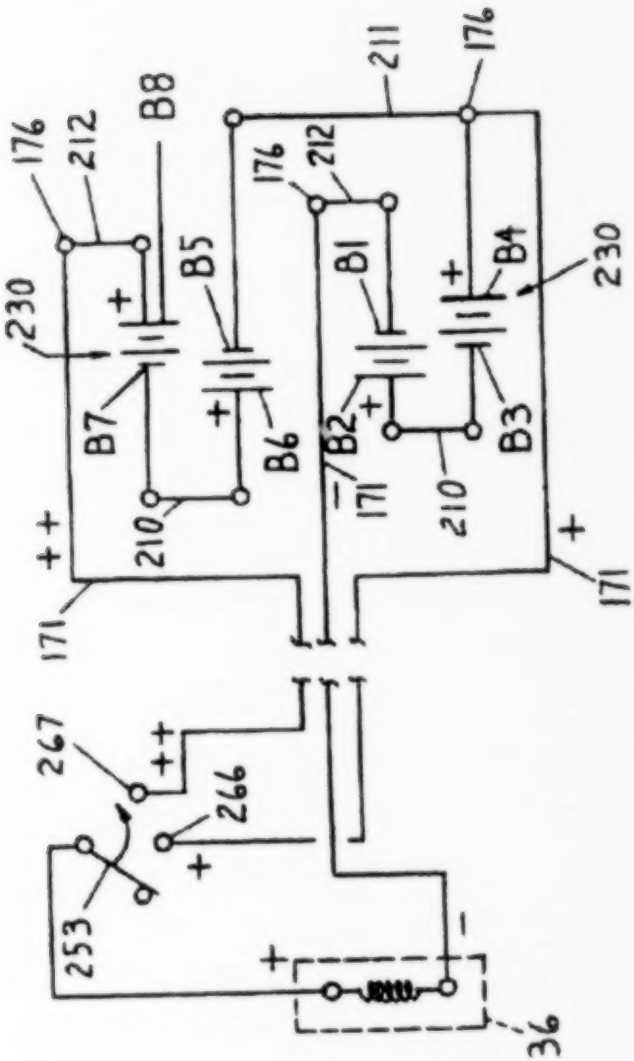
176
212
B8
230
B7
B5
B6
210
211
176
212
B1
B2
B4
B3
230
210
171
171
171
267
266
253
36

FIG. 22A

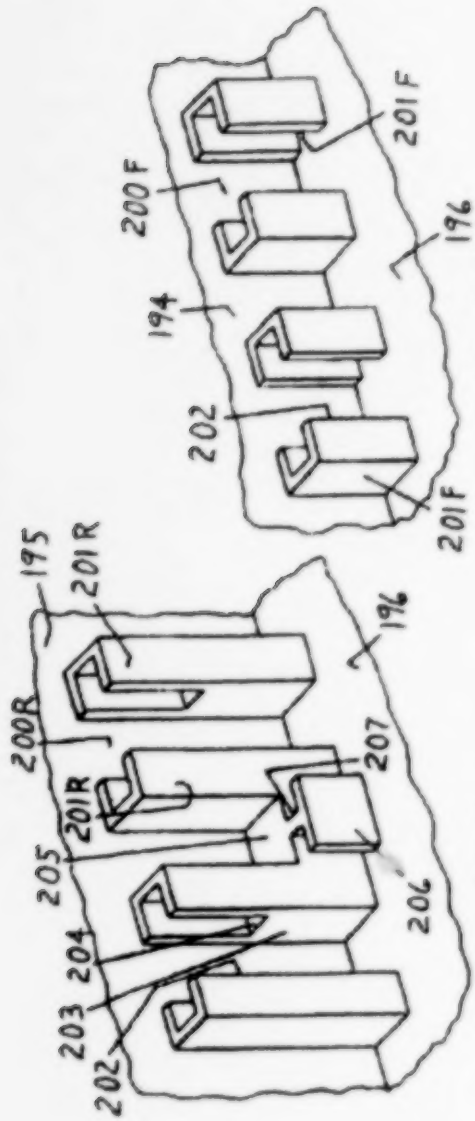


FIG. 23A

FIG. 23B

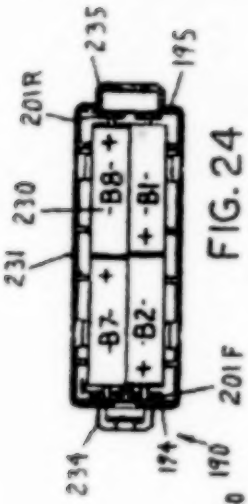


FIG. 24

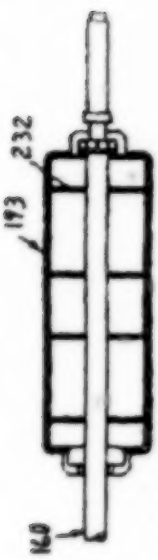


FIG. 25

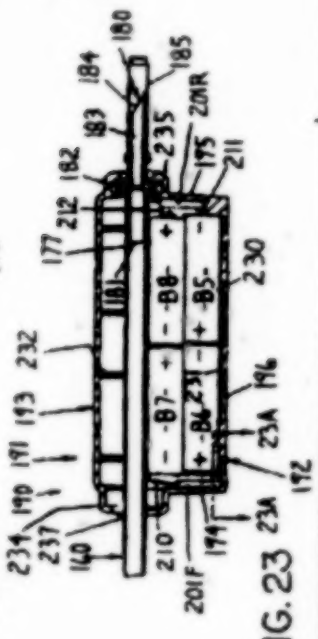


FIG. 23

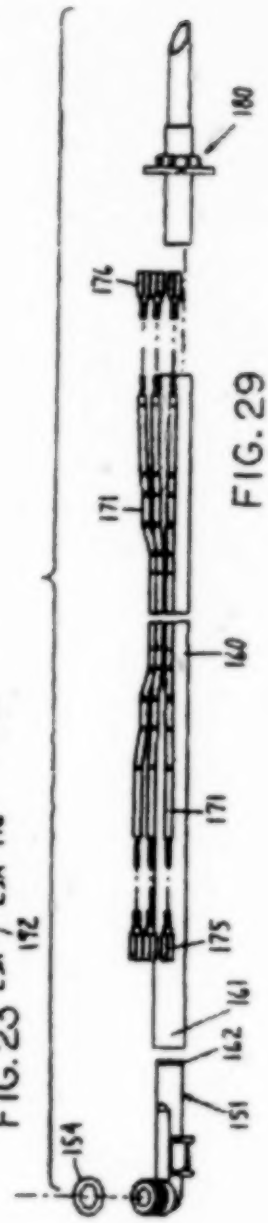


FIG. 29

# IRRIGATION HANDPIECE WITH BUILT IN PULSING PUMP

This is a continuation of Ser. No. 08/559,133, filed Nov. 17, 1995, now U.S. Pat. No. 5,718,668, which is a continuation of Ser. No. 08/049,144, filed Apr. 19, 1993 now U.S. Pat. No. 5,470,305.

## FIELD OF THE INVENTION

This invention relates to a surgical irrigation with a built in pulsing pump.

## BACKGROUND OF THE INVENTION

Grulke et al U.S. Pat. No. 5,046,486, assigned to the Assignee of the present invention, discloses a surgical pulsed irrigation handpiece which produces a pulsed irrigation liquid output capable of loosening and floating debris at a surgical site for subsequent removal (as by suction). This prior pulsed irrigation handpiece has been on the market for several years and has proved generally effective for its intended use and hence has been popular in the surgical community.

However, in a continuing effort to improve on existing devices of this general kind, the present invention has been developed. As compared to the above-mentioned prior device, a pulsed irrigation handpiece embodying the present invention is producible at lower cost, produces sharper liquid pulse transients (particularly the pulse "off" transient), requires no connection to any operating room power source (e.g. compressed air) or to an external pump, and instead is self-contained, requires only external connection to a irrigation liquid source (e.g. conventional irrigation liquid bag), provides better suction (when suction is

required), is more compact, and is conveniently shaped to be held either as a pistol or a wand (by the handle or barrel).

Other objects, purposes and advantages of the invention will be apparent to those acquainted with apparatus as general kind upon reading the following description and inspecting the accompanying drawings.

## SUMMARY OF THE INVENTION

A pulsed irrigation handpiece comprises pulsed irrigation liquid outlet means for applying liquid pulses to a surgical site, pump means reciprocatingly drivable for pumping pulses of irrigation liquid through said outlet means, powered drive means for reciprocatingly driving said pump means and housing means containing said pump means and drive means.

## BRIEF DESCRIPTION OF THE DRAWINGS

FIG. 1 is a pictorial view of a handpiece embodying the invention.

FIG. 2 is a laterally exploded pictorial view of the FIG. 1 handpiece.

FIG. 3 is an enlarged elevational view of the FIG. 1 handpiece with the leftward housing part removed.

FIG. 4 is a view similar to FIG. 3 but with the suction hose removed, the left drive unit shell part removed and the drive unit exposed in central cross-section, such that FIG. 4 approximates a central cross-sectional view of the FIG. 1 handpiece.

FIG. 4A is an enlarged fragment of FIG. 4 detailing the rearward portion of the handle.

FIG. 4B is an enlarged fragmentary pictorial view, taken from the front, of the electrical contact support posts seen in FIG. 4A.

FIG. 4C is an enlarged fragmentary exploded pictorial view of the electrical contacts, associated with the FIG. 4B posts and associated electrical conductors from the battery supply.

FIG. 5 is an enlarged, exploded, pictorial view of the drive unit of FIG. 2.

FIG. 6 is a sectional view substantially taken on the line 6–6 of FIG. 5, and provides a top view of the bottom drive unit shell part of FIG. 5 (the rightward one of FIG. 2) with the drive components removed to show the interior configuration of that shell part.

FIG. 7 is a sectional view substantially taken on the line 7–7 of FIG. 5, and provides a view similar to FIG. 6 but showing the interior configuration of the other drive unit shell part (the upper one in FIG. 5 and leftward one in FIG. 2).

FIG. 8 is an enlarged central cross-sectional view of a tip unit usable with the handpiece of FIG. 2 and showing same installed in a pump unit shown in central cross-section substantially as in FIG. 4.

FIG. 8A is a reduced size, fragmentary, side elevational view of the apparatus of FIG. 8.

FIG. 8B is a pictorial view of the apparatus of FIG. 8A.

FIG. 9 is an end elevational view of the drive unit, taken from the right end in FIGS. 2 and 3.

FIG. 10 is a sectional view substantially taken on the line 10–10 of FIG. 5 and showing the drive unit with one shell part (the left one in FIG. 2 and top one in FIG. 5) removed to show the motor and transmission.

FIG. 11 is an elevational view of the drive train substantially taken on the line 11–11 of FIG. 10.

FIG. 12 is a central cross-sectional view substantially taken on the line 12–12 of FIG. 10.

FIG. 13 is a fragmentary cross-sectional view substantially taken on the line 13–13 of FIG. 10.

FIG. 14 is a cross-sectional view substantially taken on the line 14–14 of FIG. 10.

FIG. 15 is a sectional view substantially taken on the line 15–15 of FIG. 10.

FIG. 16 is an exploded pictorial view of the pump unit of FIG. 2 in an enlarged scale.

FIG. 17 is a front end elevational view of the pump unit of FIG. 16 taken substantially from the left side of FIGS. 2–4 and 16.

FIG. 18 is a central cross-sectional view of the pump unit of FIG. 17 taken substantially on the line 18–18 of FIG. 17.

FIG. 18A is a fragment of FIG. 18 showing the pump unit at the beginning of an intake stroke.

FIG. 18B is a fragment of FIG. 18 showing the pump nearing the end of an output pulse.

FIG. 18C is a fragmentary enlargement of FIG. 18 showing the valve member.

FIG. 19 is a fragmentary cross-sectional view showing the connection of the pump unit to the liquid supply hose.

FIG. 20 is a pictorial view of the electric power supply unit connected to the FIG. 2 handpiece.

FIG. 21 is a left end view of the FIG. 20 electric power supply unit.

FIG. 22 is an exploded pictorial view of the electric power supply unit of FIG. 20.

FIG. 22A is an electrical schematic of the FIG. 2 handpiece and FIG. 20 electric power supply unit.

FIG. 23 is a central cross-sectional view taken substantially on the line 23–23 of FIG. 22.

FIG. 23A is an enlarged fragmentary pictorial view of the support structure for battery contacts at the forward (left in FIG. 23) end of the electric power supply casing.

FIG. 23B is an enlarged pictorial view similar to FIG. 23A but showing the support structure for battery contacts at the rearward (rightward in FIG. 23) end of the power supply casing.

FIG. 24 is a sectional view substantially taken on the line 24–24 of FIG. 22 and showing the electric power supply unit with its top cover removed.

FIG. 25 is a sectional view substantially taken on the line 25–25 of FIG. 22 and showing the underside of the cover of the power supply casing.

FIGS. 26, 27 and 28 are enlarged pictorial views of battery contacts of FIG. 22.

FIG. 29 is an enlarged fragmentary pictorial view of an embodiment of the liquid supply and electric wiring harness of the apparatus of FIGS. 2 and 20 but showing a modification in the attachment of the electrical and liquid handling components.

In the following detailed discussion the terms "up", "down", "right" and "left", and variations thereon, refer to structural elements in their positions in specified drawing figures.

## DETAILED DESCRIPTION

A pulsed irrigation handpiece 10 (FIGS. 1 and 2) embodying the invention comprises a hand-held housing 11 having a handle 12 and a barrel 13 which extends forward from the upper end of the handle 12 at about a 130° to 150° (here about 145°) angle thereto.

The housing 11 is hollow and, for convenience in assembling the handpiece 10, is constructed as laterally opposed concave left and right housing parts 14 and 15 (FIG. 2). The housing parts 14 and 15 are preferably molded rigid plastic elements held together rigidly by any convenient means, here comprising undercut snap fit tabs 16 protruding from the top and

bottom edges of the right housing part 15 to snap over an interior edge flange (not shown) on the top and bottom edge of the left housing part 14. If desired, precise registry together of the two housing parts can be assisted by laterally projecting pins 20 distributed along the edges of one housing part (here the left housing part 14) piloted in holes 21 (FIG. 4) in the opposed edges of the other housing part (here 15). Upon completion of assembly of the handpiece 10, the two housing parts 14 and 15 may be adhesively bonded together. The handpiece is intended to be a disposable item and therefore access to the interior of the housing for purposes of repair is not needed.

Drive Unit

The drive unit 25 (FIGS. 2-15) is self contained in its own shell 26 (FIG. 2). For convenience in assembly, the shell 26 comprises two opposed concave shell parts 30 and 31 respectively disposed to the left and right in FIG. 2. The shell parts 30 and 31 are preferably of rigid molded plastics material. When the drive unit 25 has been assembled, as in FIGS. 2 and 9, the shell parts 30 and 31 are held fixedly together by any convenient means, here by resilient snap connection of generally U-shaped clips 32, molded in spaced relation along the perimeter edge of the shell part 31 which overlap the perimeter edge of the shell part 30 and snap over tabs 33 protruding therefrom, as seen in FIGS. 5-7. Precise location of the shell parts 30 and 31 with respect to each other is assisted by locator pins 34 fixedly protruding from the shell part 31 and holes 35 in the opposed portions of the shell part 30.

A conventional DC energizable electric motor 36 (FIGS. 4 and 5) is snugly housed in the space between

the left and right (FIG. 2) shell parts 30 and 31 at the rear (left in FIGS. 5-7, 10 and 12) thereof. The motor 36 is snugly axially located between the rear end wall 40 and a transverse internal bulkhead 41 of the shell 26 (FIGS. 5-7, 10 and 12). The rear end wall 40 and bulkhead 41 have opposed parts in the left and right shell parts 30 and 31, as seen in FIGS. 6 and 7.

Rear and front bosses 42 and 43 respectively extend rearward and forward from the cylindrical casing 44 of the motor 36, as seen in FIGS. 10 and 12, and are supported in corresponding coaxial recesses 45 and 46 in the rear end wall 40 and bulkhead 41 respectively, so as to support the motor casing 44 with respect to the shell 26. A flat 47 on the rear boss 42 (FIG. 9) co-acts with a corresponding flat in the surrounding recess 45 to prevent rotation of the motor casing 44 with respect to the shell parts 30 and 31, such that the motor 36 is antirotationally fixed within the shell 26.

The drive unit 25 further includes a transmission 50 (FIG. 5) coaxial with and forward of the motor 36. The transmission includes a reciprocating link member 51 and is driven from the forward extending, rotating output shaft 52 of the motor 36. The shaft 52 extends coaxially forward through the front boss 43 (FIG. 12) of the motor 36.

The transmission 50 (FIGS. 5 and 12) includes a pinion gear 53 fixed on the motor shaft 52 for rotation thereby, and a face gear 54 which, as seen in FIG. 12, underlies the pinion gear 53. The face gear 54 has a relatively large diameter central disk 56 carrying upward facing teeth 55 engaging corresponding teeth on the pinion gear 53 for rotation thereby. The face gear

54 includes a secondary pinion gear 57 fixed coaxially beneath the disk 56, and of substantially lesser diameter, which in turn drives a relatively large diameter output gear 60.

It will be understood that the pinion gear 53, face gear 54, secondary pinion 57 and output gear 60 are all provided with a full circumferential (360°) set of teeth, so that continuous rotation of the motor shaft 52 results in continuous rotation of the output gear 60. For convenience in drawing, some or all the gear teeth are not shown in various of the drawings, the toothed meshing connection of the gears therein thus being only schematically shown. See for example FIGS. 4, 10, 12, 13 and 14.

An output shaft 61 is fixed to and coaxially upstanding from the output gear 60 (FIG. 12) and fixedly rotatably drives an eccentric member 62 (FIGS. 5, 10 and 12) spaced above the output gear 60. In this embodiment, the output shaft is of rectangular cross-section to maximize its torque transmitting capability.

The eccentric member 62 comprises a radially extending disk 63 (FIG. 5) coaxial with the output shaft 61 and fixedly surmounted by an eccentric circular cylinder 64 eccentrically rotatable with the output shaft 61.

The link member 51 is generally T-shaped, as seen in FIG. 13, having a plate-like body 70 overlying the disk 63 of the eccentric member 62 and lying at right angles to the output shaft 61, and further having a plate-like fork 71 fixed at the rightward (FIGS. 5, 10, 12 and 13) end of the plate-like body 70 and extending in a plane substantially parallel to the output shaft 61.

The plane of the plate-like fork 71 is perpendicular to the intended direction of reciprocating movement of the link member 51. The body 70, at its end portion remote from the fork 71, has an oblong through opening 72 snugly radially receiving the rotating eccentric cylinder 64 of the eccentric member 62, as seen in FIG. 10. More particularly, the length direction of the oblong opening 72 extends parallel to the plane of the fork 71 and is of sufficient length to accommodate 360° rotation of the eccentric cylinder 64 without movement of the body 70 parallel to the plane of the fork 71. On the other hand, the width of the oblong opening 72, namely in a direction perpendicular to the plane of the fork 71, corresponds substantially to the diameter of the eccentric cylinder 64, providing a sliding clearance between the body 70 and eccentric cylinder 64, so that rotation of the eccentric cylinder 64 will result in reciprocation of the link member 51 in a direction perpendicular to the plane of the fork 71.

The plate-like body 70 includes a thickened rim 73 (FIG. 5) around the oblong opening 72 and may thus be said to form a yoke for coaction with the eccentric cylinder 64. The side edges of the body 70 are preferably also thickened to form parallel longitudinal guide rails 74 (FIG. 10).

The above discussed moving elements of the transmission 50 are located and movably supported within the shell 26 as follows. The face gear 54 has coaxial downward and upward (FIGS. 5-7, 10 and 12) extending stub shafts 75 and 76 respectively rotatably supported in coaxial bearing bosses 80 and 81 respectively fixed on the opposing faces of the shell parts 31 and 30 (FIGS. 6, 7 and 12). Similarly, the output gear 60 and the eccentric member 62 have respective

downward and upward extending stub shafts 82 and 83 coaxial with the output shaft 61 and rotatably supported in respective cylindrical bearing bosses 84 and 85 in the respective shells 31 and 30 (FIGS. 5-7 and 12). The link member 51 is slidably guided for reciprocation in a notch 90 (FIGS. 5 and 7) in the peripheral wall 91 of the left (upper in FIG. 5) shell part 30. The notch 90 has parallel opposed guide faces 92 (FIG. 7) spaced apart to snugly slidably guide therebetween the opposite guide rails 74 of the link member 51, and thus spaced at substantially at the maximum width of the link member. The thickness of the link member is guided for reciprocation between the peripheral edge 93 of the right (lower in FIG. 5) shell 31 and the width wall 94 (FIGS. 5 and 7) of the other shell part 30.

The central length axis LA (FIG. 10) of the link member intersects the central length axis MA of the motor shaft 52 at the axis SA of the output shaft 61 and stub shaft 83 (FIGS. 10 and 12), at an angle equal to the angle between the central length axis of the handle 12 and barrel 13 of the housing 11. Moreover, the length axes of the handle and barrel also intersect at the axis SA of the output shaft 61 when the drive unit 25 is installed in the handpiece housing 11 as hereafter discussed. In effect then, the link member longitudinal axis LA and motor shaft axis MA define the length axis of the barrel 13 and handle 12, respectively, when the drive unit 25 is installed in the handpiece housing 11.

The drive unit 25 is located within the handle 12, as follows. As seen in FIGS. 3 and 4, transverse ribs 95 are molded into the interior surface of the handle 12 at opposing locations in the left and right housing

parts 14 and 15 (FIGS. 2-4). For drawing convenience, only the ribs in the right housing part 15 are shown, the ribs in the left housing part 14 being compatible. The ribs 95 locate the drive unit 25 in the rightward/leftward direction in FIG. 2. Further, the drive unit shell bosses 84 and 85 (FIG. 5) protrude sideways from the drive unit shell and are pivotally received in corresponding hollow cylindrical bosses, one of which is shown at 96 in FIG. 2, and which extend toward each other from the interior of the left and right housing parts 14 and 15. The hollow cylindrical boss 96 of the left housing part 14 is not shown but is opposed to and compatible with the housing part 96 shown in the right housing part 15 of FIG. 2. The drive unit 25 is thus, except for the lateral positioning defined by the ribs 95, pivotally located within the handpiece housing 11 and is thus capable of some pivotal floating in the housing to achieve proper alignment of the longitudinal movement axis LA (FIGS. 7) of the link member 51 with respect to the barrel 13 and a pump unit 100 (FIGS. 2–4 and 16–18) located in the barrel 13 as hereafter discussed.

Pump Unit

Turning now to the pump unit 100, attention is directed to FIGS. 2-4 and 16-18. The pump unit 100 includes a bellows 101 including an axially expandable and contractible flexible bellows wall 114 (FIG. 18) and a forwardly extending, rigid, annular flange wall 102. Such flange wall 102 is loosely telescoped over a rigid rearwardly extending annular flange 103 of a rigid, forwardly extending coaxial bellows housing 104.

The bellows 101 and bellows housing 104 are preferably of molded plastics material. A resilient O-ring 105 (FIGS. 16 and 19) is snugly radially disposed between the radially opposed, axially extending annular flanges 102 and 103, to create a fluid seal therebetween and hence between the bellows 101 and bellows housing 104, to prevent fluid leakage therebetween. The bellows 101 and bellows housing 104 have respective axially spaced radially extending steps 106 and 107 joined to the respective annular flanges 102 and 103 and axially spaced apart at a distance substantially greater than the diameter of the O-ring 105, as seen in FIG. 19. The axial extending flanges 102 and 103 and radially extending steps 105 and 106 define an annular chamber 110 in which the O-ring 105 is axially loosely, and radially snugly and sealingly, disposed. Note that the radially opposed surfaces of the axially extending annular flanges 102 and 103 are cylindrical, such that neither has an annular groove in which the O-ring seats. Thus, the O-ring is free to roll on the radially opposed cylindrical surfaces of the axially extending flanges 102 and 103 and the O-ring 105 does not significantly interfere with axial separation of the bellows 101 and bellows housing 104 from each other.

Instead, such axial separation is prevented, as hereinafter further discussed, by a forwardly-rearwardly (leftwardly-rightwardly in FIG. 2) spaced pair of ribs 111 (FIG. 2) extending radially inward from the interior wall of the right housing part 15 and a corresponding, laterally opposed pair of mirror imaged ribs (not shown) extending laterally inward from the interior wall of the left housing part 14. Such ribs 111 are also schematically indicated in FIG. 18.

The rear (right in FIG. 19) end of the bellows housing axial flange **103** abuts the radially extending step **106** of the bellows **101** and the forward (leftward in FIG. 19) end of the bellows axial flange **102** axially abuts a radial flange **112** which extends radially outward from and forwardly from the bellows housing step **107**. The forward end of the bellows axial flange **102** thus radially overlaps the bellows housing step **107** in snug but axially slidable relation thereto. A small forwardly extending annular rib **113** protrudes forwardly from the bellows radial step **106** toward the O-ring **105** to prevent rearward escape of the O-ring **105** from the space between the axially extending flanges **102** and **103**, in the event of slight axial shifting of the bellows **101** and bellows housing **104** away from each other.

The above mentioned radially inward extending ribs **111** of the handpiece housing **11** snugly axially oppose and sandwich therebetween the bellows radial step **106** and bellows housing radial flange **112** to positively prevent axial separation of the bellows **101** from the bellows housing **104**, when the pump unit **100** is installed in the housing **11**.

The above-mentioned bellows wall **114** extends rearward from the inner periphery of the radially extending annular step **106** of the bellows **101** (FIG. 18) and consists of an axially collapsible and extensible, flexible, wave cross-section, peripheral wall **114**. The bellows wall **114** surrounds an axially expansible and contractible pumping chamber **115**. At the rear end of the bellows **101**, a radially extending drive end wall **116** closes the rear end of the bellows wall **114** and pumping chamber **115**. A stub **120**, having a radially

enlarged head 121, is fixed to and extends coaxially rearwardly from the drive end wall 116.

To axially reciprocatingly drive (repetitively axially contract and expand) the bellows 101, the above discussed link member 51 (FIG. 5) of the drive unit 25 has its fork 71 provided with a central, radially opening, generally U-shaped slot 122 (FIGS. 11–13). The slot 122 divides the fork 71 into a pair of tines 123 (FIG. 11). The slot 122 opens leftwardly in FIG. 2, namely away from the rightward housing part 15 and toward the leftward housing part 14. Thus, with the drive unit 25 located in the right housing part 12 as seen in FIG. 3, the pump unit 100 can be inserted into the rightward housing part 15, with the stub 120 (FIG. 18) inserted in the slot 122 of the fork 71 (FIG. 11) so as to trap the tines 123 axially between the drive end wall 116 and head 121 of the bellows 101, as generally indicated in FIGS. 3 and 4. To prevent the bellows stub 120 from accidentally radially escaping out the open end of the slot 122 in the fork 71, the central portion 124 (FIG. 11) of the slot 122 is undercut by inward tapering of an intermediate portion 125 of the slot 122 as seen in FIG. 11. The tapered portion 125 of the slot 122 (FIG. 11) defines a snap fit detente for resiliently trapping the bellows stub 120 in the drive unit slot 122. Thus, to install the bellows stub 120 in the slot 122, the bellows stub 120 must be resiliently forced through the tapered portion 125 of the slot 122 and upon passing the latter, the stub resiliently snaps into the central portion 124 of the slot. The inner ends of the tapered portion 125 of the slot resiliently maintain the stub radially inboard thereof, in the central portion 124 of the slot 122.

The stub **120** and hence the bellows **101**, and indeed the entire pump unit **100**, is thus freely rotatable about its length axis with respect to the fork **71**, so that the circumferential orientation of the drive unit **25** and the pump unit **100** is determined by the location thereof in the housing. The drive unit **25** and pump unit **100** are thus, to an extent, free to circumferentially float with respect to each other, about the connection of the stub **120** and fork **71**, without interfering with the circumferential location of the drive unit **25** and pump unit **100** in the housing **11**. Further, the edges of the slot **122**, in particular of the central portion **124** thereof, are rounded in cross-section, as is the stub **120**, to permit a modest amount of angular adjustment between the length axes MA and LA of the drive unit **25** and pump unit **100** and to allow the drive unit **25** and pump unit **100** to easily settle into their proper operating positions in the housing **11**.

A cylindrical plug **126** is coaxially fixed to the interior side (left side in FIG. **18**) of the bellows drive end wall **116** by a coaxial, rearward extending, undercut pin **127** snap fitted in a forwardly (leftwardly in FIG. **18**) opening recess in the stub **120**. The plug **126** has a diametral slot **130** opening forward from its front end and which faces forward toward a resilient valve member **131** (FIGS. **16** and **18**) to maintain liquid communication between the central and radially outer portions of the pumping chamber **115**.

The bellows **101** is thus a single element which carries out four different functions, namely sealing at the forward end, changing the pump chamber size in the middle thereof, the rearend acts as a piston and as a drive point. In addition, the front annular flange **102**

helps locate the pump unit with respect to the housing barrel.

The pump unit **100** further includes a valve member **131**, which is a one piece member of suitable resilient material and which by itself constitutes the entire moveable inlet and outlet valve system for the pump unit **100**. More particularly, the valve member **131** comprises a short tubular central portion **132** (FIG. 18) which coaxially connects a forward (leftward in FIG. 18) tapering, duck bill type, outlet valve **133** and a rearwardly and radially outwardly extending umbrella type, inlet valve **134**. The umbrella valve **134** is annular and has a central opening **135** which communicates coaxially from the pumping chamber **115** in the bellows **101** forwardly through the tubular central portion **132** and outlet duck bill valve **133** of the valve member **131**.

The bellows housing **104** comprises a rear (right in FIGS. 18 and 18C) facing recess having a perimeter defined by the annular flange **103** of the bellows housing **104** and a rear facing radial wall **136** which defines the front end of the pumping chamber **115**. The umbrella valve **134** lies coaxially in the resulting recess **103, 136**. The forward facing perimeter **137** of the umbrella valve **134**, in its closed condition shown in FIGS. 18 and 18C, presses forward against the radial wall **136** to seal thereagainst. The valve member **131** is held against the right (rearward) movement away from the bellows housing wall **136** by axial interference between a rightward facing, radially outward extending, annular step **140** (FIG. 18C) at the rear (right) end of the duck bill valve **133**, and a radially inward extending, leftward facing, annular flange **141** of the bellows housing **104**. The radially inward di-

rected, annular flange 141 is axially interposed between, and forms a port 142 between, the rear facing recess 103, 136 and a coaxial, forwardly extending, cylindrical, irrigation liquid outlet conduit 143 (FIGS. 18 and 18C). The tubular central portion 132 of the valve member 131 extends snugly axially through the port 142.

To install the valve member 131 in the bellows housing 104, the tapered outlet duck bill valve 133 is pushed forward through the port 142, the bellows valve step 140 snaps forwardly (leftwardly in FIG. 18C) past the bellows housing flange 141, and the sealing perimeter 137 of the umbrella valve 134 is thereby pulled forwardly resiliently against the rearward facing bellows housing wall 136, leaving the valve member 131 with its duck bill valve 133 and umbrella valve 134 both in their closed condition shown in FIGS. 18 and 18C.

The bellows housing 104 further includes an annular liquid jacket 144 (FIGS. 18 and 18C) surrounding the rear portion of the liquid outlet conduit 143 and defining radially therebetween an annular liquid inlet chamber 145 (FIGS. 18, 18C and 19). The inlet chamber 145 communicates between a radial inlet port 146 (FIGS. 16 and 19), which opens radially outward through the side of the bellows housing 104, and an annular space 147 (FIG. 18C). The annular space 147 is bounded by the forward face 150 and tubular central portion 132 and sealing perimeter 137 of the umbrella valve 134 and the radial face 136 of the recess 103, 136 of the bellows housing 104.

Thus, a rightward pullback of the bellows head 121 axially expands the bellows, from its FIG. 18A posi-

tion towards its FIG. 18 position. This reduces the pressure within the bellows. This in turn keeps the duck bill valve 133 closed and pulls the sealing perimeter 137 of the umbrella valve 134 rightwardly away from the bellows housing recess radial wall 136 and draws liquid from the port 146 through the annular inlet chamber 145, around the perimeter 137 of the open umbrella valve and into the interior of bellows.

On the other hand, a leftward push forward of the bellows head 121 axially compresses the bellows from its FIG. 18 position toward its FIG. 18B position and raises the pressure in the bellows, to close the umbrella valve 134 and open the duck bill valve 133 and force a pulse of liquid out of the bellows forwardly through the duck bill valve 133 and liquid outlet conduit 143.

Irrigation liquid is drawn to the inlet port 146 of the bellows housing 104 through an elbow 151 (FIG. 19). The outlet end 152 of the elbow and the inlet port 146 are cylindrical, with the elbow outlet end 152 being a snug axially sliding fit in the inlet port 146. An axially elongate, annular groove 153 in the outer periphery of the elbow outlet 152 houses a seal ring, here an O-ring, 154 which bears sealing and rollingly on the radially opposed and surrounding surface of the inlet port 146 to prevent liquid leakage out of the elbow 151 at its interface with the inlet port 146. The elbow 151 is not mechanically interlocked with the inlet port 146 but can slide in and out with respect thereto. The elbow 151 is held in place with its outlet end 152 sealingly within the port 146 by bearing of a portion 155 (FIG. 4) of the handpiece housing barrel 13 against the outboard surface 156 of the elbow 151, with the pump unit installed in the handpiece housing

11. The elbow 151 here fixedly carries a pair of parallel fins 157 (FIGS. 16, 17 and 19). The fins 157 extend radially from the rear inlet end portion of the elbow 151 and axially sandwich therebetween the flanges 106 and 112 of the bellows 101 and bellows housing 104, at least to help the housing ribs 111 (FIG. 18) fins 157 prevent axial separation of the bellows and bellows housing. The housing ribs 111 and fins 157 are more or less evenly circumferentially located around the bellows 101 and bellows housing 104.

An elongate flexible irrigation liquid supply hose 160 (FIGS. 2, 4, 16, 17, 19, 22, 23, 25 and 29) has a forward end 161 which telescopes sealing and fixedly over the rear end 162 of the elbow 151 as seen in FIGS. 19 and 29. Although an annular barb is shown at 162 (for example in FIG. 19) a barbless, cylindrical end 162 is satisfactory. In the assembled handpiece, the irrigation liquid hose 160 extends rearward from the elbow 151 (FIG. 4) in the barrel 13 of the housing and angles downwardly and rearwardly along the bottom of the handpiece handle 12 to exit rearwardly and downwardly through a hole 163 (FIG. 2) in the bottom end wall 164 of the handpiece housing 11. A clamp plate 165 (FIGS. 2, 3 and 4) of bent cross-section has a perimeter groove 166 for receiving the edges of the hole 163 in the housing bottom end wall 164, such that the clamp plate 165 is trapped in and partly closes the hole 163 in the bottom end 164 of the housing handle 12 when the housing is fully assembled. A notch 167 (FIG. 2) in the rightward end of the clamp plate 165 permits exit therethrough of irrigation liquid supply hose 160 from the handpiece housing 11 and snugly and frictionally grips such hose, without crushing or collapsing it, so that such hose 160 cannot easily be pulled out of the housing 11 or off the elbow 151.

The irrigation liquid hose **160** has fixed on the outside thereof, as by extruding or molding integrally therewith, a smaller diameter rib **170** (FIGS. **2**, **16** and **17**). A plurality (here three) of insulated electrical conductors (wires) **171** have intermediate portions contained within and extending the length of the rib **170**. Forward end portions of the insulated wires **171** emerge from the forward end of the rib **170** and carry conventional electrically conductive connectors **175**. The forward end of the rib **170** extends through the notch **167** (FIG. **2**) and ends just inside the bottom portion of the handle **12** of the housing **11**, as seen in FIG. **4**. The forward ends of the conductors **171**, carrying the connectors **175**, extend into the lower portion of the handpiece handle **12** for purposes appearing hereinafter.

The insulated electrical conductors **171** extend along the length of the central portion of the liquid supply hose **160** and have rear ends provided with respective electrically conductive connectors **176** (FIGS. **22** and **29**), such that electric current can flow from a given rear connector **176** through its corresponding insulated electrical conductor **171** and to its corresponding front electrically conductive connector **175** in a conventional manner. Short rear portions of the conductors **171** are loose and moveable with respect to the liquid supply hose **160** as seen in FIGS. **22** and **29**.

The electrical connectors **175** and **176** are conventional crimp type connectors.

Instead of being molded in or otherwise constrained within the generally circular cross section rib **170** in FIG. **2**, the elongate central portion of the insulated electrical conductors **171** may be fixed side by

side, in a flat array, to the outside of the liquid hose **160**, as shown in FIGS. **22** and **29**, and such can be accomplished by adhesive bonding or by any other convenient means.

The hose **160, 170** thus serves the dual use of conveying both irrigation liquid and electric operating power.

The length of the central portion of the liquid hose **160**, to which the insulated conductors **170** are fixed, preferably extends several feet (for example 8 to 10 feet) from the handpiece **10**. The rear end **177** (FIGS. **22** and **23**) of the liquid hose is here provided with a fitting **180** of hollow tubular construction open to axial liquid flow therethrough. The fitting **180** comprises a forward end portion **181** (FIG. **23**) fixed sealingly telescoped in the rear end **177** of the liquid hose **160**, a square central flange **182** (FIG. **22**) and a rear end portion (or "spike") **183** having a sharpened tip **184**. The tip **184** is capable of conventional insertion into a conventional source S (FIG. **22**) of irrigation liquid, for example a conventional supply bag, for conveying irrigation liquid therefrom forward into the hose **160**. The square flange **182** prevents rotation of the fitting **180** in the casing **191**, which helps when removing the spike **183** from the liquid supply bag. In the embodiment shown, the rear end portion **183** is covered by a protective cap **185** prior to use so that the sharpened tip **184** will not accidentally be dulled.

Thus, the length of the liquid supply hose **160** allows the irrigation liquid source S to be located at a distance from the handpiece and thus out of the way of the surgical personnel at the operating table where the handpiece **10** is to be used.

Electrical Power Supply Unit

To provide operating electrical power to the motor **36**, a compact, self contained electrical power supply unit **190** (FIGS. **20–25**) is fixed on the rear end portion **177** of the liquid hose **160**, and is thus located remotely from the handpiece **10**, adjacent to the source S of irrigation liquid.

The power supply unit **190** comprises a casing **191** preferably of rigid molded plastics material. The casing **191** here comprises a relatively deep, substantially rectangular pan **192** (FIG. **2**) whose top (as oriented in FIGS. **22** and **23**) is fixedly closed by a cover **193**. The pan **192** has front and rear end walls **194** and **195** (FIGS. **23**, **23A** and **24**) having fixed upward opening slots **200** each defined by a laterally spaced, opposed pair of U-shaped flanges **201** (FIGS. **23A** and **23B**). The slots **200** are undercut in that each has a mouth **202** laterally narrower than the remainder of the slot **200** and communicating between the remainder of the slot **200** and the interior cavity of the pan **192**. The undercut slots **200** are of constant cross-sectional size and shape vertically (i.e. into and out of the page in FIG. **24** and up and down in FIG. **23**).

For convenient reference in the drawings, the reference numerals **200** and **201** are suffixed, so that the undercut slots and U-shaped flanges on the front pan wall **194** are indicated by the reference characters **200F** and **201F** and the undercut slots and U-shaped flanges on the rear pan wall **195** are indicated at **200R** and **201R**.

The U-shaped flanges **201F** defining the slots **200F** on the forward end wall **194** start substantially from

the pan bottom wall **196** and extend a bit less than half way up the front end wall **194**.

On the other hand, the U-shaped flanges **201R** of the slots **200R** on the rearward end wall **195** of the pan are spaced above the bottom wall **196** of the pan upon respective block-like pillars **203** which define an up-facing bottom **204** for each of the U-shaped flanges **201R** on the rear pan wall **195**.

Rising from bottom wall **196** of the pan between the two central pillars **203** to a height below the bottoms **204** of the slots **200R** thereof, is a central block **205** from which forwardly extends, along the pan bottom wall **196**, a T-shaped flange **206** (FIG. **23B**) of constant cross section vertically and defining a pair of vertically open and laterally oppositely opening grooves **207** disposed immediately forward from the two central pillars **203** on the rear pan wall **195**.

Two such undercut slots **200F** are spaced symmetrically side by side on the front pan wall **194**. Similarly, and at the same effective lateral spacing, two such slots **200R** are spaced laterally side by side on the pan rear wall **195**.

Springy, electrically conductive sheet metal battery contacts of three different kinds are indicated at **210** and **211** and **212** and FIGS. **26**, **27** and **28** respectively.

A pair of such contacts **210** are provided and each comprises a generally rectangular foot **213** adapted to snugly slide down into a respective undercut slot **200F** at the pan front wall **194**. Each foot **213** is provided with resilient toes **214** angled out of the plane of the

foot 213 and adapted to bite against the interior of the corresponding undercut slot 200F to fix the corresponding battery contact 210 in place therein.

Similarly, each of a pair of battery contacts 212 (FIG. 28) has a resilient fork-shaped foot 215 adapted to fit snugly and slidingly down into the corresponding undercut groove 200R at the rear wall 195 of the pan 192 and with springy toes 216 for fixedly gripping the interior of the corresponding undercut slot 200R.

In a generally similar manner the single, low speed battery contact 211 (FIG. 27) has a resilient U-shaped foot 217 for sliding down over the T-shaped flange 206 (FIG. 23B), with springy toes 218 bent out of the plane of the foot 217 for bitingly engaging the walls of the grooves 207 of the T-shaped flange 206.

Each of the battery contacts 210, 211 and 212 thus slides with its corresponding foot into the desired location with respect to the grooves 200F, 200R and 207 and locks fixedly therein. This is generally indicated in FIGS. 22–24. The battery contacts 210, 211 and 212 have respective resilient fingers 221, 222 and 223 (FIGS. 26, 27 and 28 respectively), two each for the battery contacts 210 and 211 and one each for the battery contacts 212. Such fingers 221, 222 and 223 protrude from the respective slots 200F, 200R and 207 into the interior of the pan 192 for electrically contacting batteries 230 (FIG. 22) to be housed in the pan 192. Further, the battery contact 211 and each of the battery contacts 212 (FIGS. 27 and 28 respectively) have an upstanding terminal (224 and 225 respectively) of simple rectangular shape for releasable telescoped engagement within a respective one of the

connectors **176** at the rear ends of the three insulated electrical conductors **171** (FIG. **22**).

Turning now to the arrangement of the batteries **230** within the pan **192**, one embodiment according to the invention advantageously uses batteries of a kind widely available in retail stores, namely AA size alkaline batteries. In addition to their wide availability to the public, these batteries advantageously are inexpensive, have a long shelf life and provide full operating voltage until almost fully discharged. In the embodiment shown, eight such batteries **230** are provided and are individually indicated at **B1**, **B2**, **B3**, **B4**, **B5**, **B6**, **B7** and **B8**. As shown in FIGS. **22–24**, ribs **231** extending circumferentially within the pan **192** cradle the batteries **230** fixedly but removably within the pan **192**. The polarity of the eight batteries is indicated by "plus" signs marked thereon. As seen in the drawings, the batteries **230** are arranged in four rows of two head-to-tail batteries each. Four of the batteries **230** lie in the bottom (FIGS. **22** and **23**) of the pan in two rows of two each and the remaining four batteries **230** lie on top of those.

The ends of the battery rows bear variously on the above discussed battery contacts **210**, **211** and **212** as generally indicated for example in FIG. **22** and also in the schematic circuit drawing in FIG. **22A**. More particularly, the four batteries **B1**, **B2**, **B3** and **B4** defining a vertical plane nearest to the viewer in FIG. **23** are connected in series from the near connector **212** leftwardly through the top row of batteries, down through the near upstanding connector **210** and thence rightwardly through the bottom pair of batteries to the lower rear connector **211**. The remaining four batteries **B5–B8** are arranged in a vertical plane

behind above-mentioned batteries **B1–B4**. More particularly, the batteries **B5–B8** connect in series from the far side of the lower rear connector **211** forwardly (leftwardly in FIG. **22**) to the far connector **210**, upwardly therethrough, and then rearwardly back to the far upper connector **212**.

The cover **193** (FIGS. **23** and **25**) has plural, laterally extending, depending ribs **232** (FIGS. **23** and **25**) intended to seat upon the uppermost batteries **B1**, **B2**, **B7** and **B8** and fix the batteries **B1–B8** in the pan with the cover **193** fixed in its normal closed position atop the pan **192**. The cover is fixedly securable atop the pan by any convenient means, such as snap fit connectors, a portion of which are generally shown in **233** in FIG. **22**, and generally like those discussed above with respect to the handpiece housing **11**, as at **16**, and as generally discussed with respect to the drive unit shell **26**, as at **32**, **33**.

The aforementioned rear end **177** of the hose **160** extends through the casing **191** along the horizontal parting plane between the pan **192** and cover **193**, and so lies close adjacent the topmost batteries **B1**, **B2**, **B7** and **B8**.

Hollow front and rear bosses **234** and **235** (FIGS. **23** and **25**) extend forward and rearward respectively, from the casing **191**. At the parting plane between the pan **192** and cover **193**, the bosses **234** and **235** are notched (for example at **236** in FIG. **22**) for extension therethrough of the rear end **177** of the liquid hose **160**. The rear hollow boss **235** is sized and shaped to receive radially therein the square flange **182** (FIG. **23**) on the rear end of the liquid hose **160**, and thereby axially fix the rear end of the liquid supply hose **160**

within the casing 191 and nonrotatably fix the fitting 180 to the battery casing 191. The notch 236 in the front boss portion 234 on the cover 193 is indented by one or more small recesses 237 for receiving axially therethrough the rib 170 containing the insulated electrical conductors 171, whose rear end connectors 176 are respectively fixed to the terminals 224 and 225 of the battery contacts 211 and 212.

Trigger Unit

The handpiece 10 further includes a trigger unit 240 (FIGS. 2–4) for controlling actuation of the motor 36. The trigger unit 240 comprises a generally L-shaped trigger member 241 (FIGS. 2, 4 and 4A) comprising an elongate trigger lever 242. The upper, forward (leftward in FIGS. 2 and 4) end of the trigger lever is pivoted by laterally extending integral pins 243 pivotally receivable in suitable holes in laterally opposed bosses 244 (one of which is shown in FIG. 2) in the opposing lower edges of the housing parts 14 and 15, near the rear end of the barrel 13. Snapping together of the two housing parts 14 and 15 thus captures the pivot pins 243 and pivotally mounts the trigger with respect to the handpiece housing 11.

The trigger lever 242 includes a transverse ridge 245 (FIG. 4) near to but spaced rearwardly from the pivot pins 243 and facing the underside of the barrel 13 and adapted to bear on the underside thereof in the manner of a fulcrum. By far the major length 246 of the trigger lever 242 is to the rear (right in FIG. 4) of the fulcrum ridge 245. This rearward trigger part 246 is relatively rigid in the portion thereof spaced at least somewhat to the rear of the fulcrum ridge 245. Such rigidity is assisted by a forward facing longitu-

dinal reinforcement rib 247 extending rearward along the front face of the trigger lever 242 from a point near the fulcrum ridge 245. The front of the trigger lever 242, to the rear of the fulcrum ridge 245 is, in the embodiment shown, provided with transversely extending ribs 248 to provide the user with a non-slip grip of the trigger lever 242.

The trigger lever 242 is bendable near the fulcrum ridge 245, both to the front and rear thereof, in a resilient manner. In this way, the resilience of the trigger lever tends to hold it in its forward, inactive position shown in FIG. 4, with the fulcrum ridge 245 bearing on the underside of the handpiece barrel 13. On the other hand, when the user grips the handle 12 and squeezes the trigger lever 245 toward it, in the direction indicated by the arrow TA in FIG. 4, the trigger lever bends in the region of the fulcrum ridge 245, tending to straighten from its relaxed convexly forwardly curved configuration of FIG. 4, so that the rear face of the trigger lever can be pulled into the dotted line position 242P, substantially against the front face of the handle 12. Upon release of the trigger by the user, the natural resilience of the trigger lever 242 unbends it back to its solid line forward position shown in FIG. 4. Accordingly, the trigger naturally returns forward to its non-operative position without need for a separate return spring.

The trigger arm 251 fixedly carries a thumb 250 (FIG. 4A) intermediate it ends in the housing handle 15 and which interferes with the housing wall adjacent the hole 252, to prevent the resilient restoring force of the trigger lever 242 from pulling the trigger arm 251 leftwardly (FIG. 4A) out of the housing handle 12.

A plank-like switch contact support arm **251** (FIGS. **2**, **4** and **4A**) protrudes substantially at a right angle from the rear, or bottom, end of the trigger lever **242** and extends upwardly and rearwardly (in FIG. **4**) into the lower portion of the handle **12**, loosely through a hole **252** (FIG. **4A**) in the opposing bottom wall of the handle. A plate-like electrically conductive contact blade **253** fixedly extends through the thickness of the arm **251**, and has a front portion exposed towards said motor and a rear portion exposed toward the bottom end **164** of the handpiece handle.

A pair of rectangular posts **255** and **256** protrude fixedly into the interior of the handle **12** from the inside of the right housing part **15**, about midway between the drive unit **25** and the housing bottom end **164** (FIGS. **4A** and **4B**). Each post **255** and **256** includes a T-shaped flange **260** extending substantially forward toward the drive unit **25**. Each T-shaped flange **260** defines a pair of oppositely facing grooves **261** (FIG. **4C**).

Electrically conductive, spring-like metal contacts **262** and **263** (FIGS. **4A** and **4C**) each have a substantially U-shaped foot **264** for reception on the T-shaped flange **260** of the corresponding posts **255** and **256**. The contacts **262** and **263** further each have a substantially rectangular, projecting terminal **265** for telescopic fixing thereon, in electrically connected relation, a corresponding one of the front connectors **175** of the three insulated electrical conductors **171**. The electrical contacts **262** and **263** further have respective, generally L-shaped, plate-like, flexible contact leaves **266** and **267** (FIG. **4C**). The contact leaves **266** and **267** extend toward the drive unit **25** as seen in FIG. **4A**.

Protruding rearwardly from the motor **36** are a pair of electrically conductive contacts **270** and **271** (FIGS. **4A** and **9**). The contact **271** is a conventional terminal (like those at **224**, **225** and **265**) for receiving one of the front connectors **175** in fixed and electrically conductive relation thereon.

In contrast, the contact **270** is an elongate, springy rectangular piece, bent intermediate its ends in dog-leg fashion, and angling from the rear end of the motor **36** rearwardly and somewhat rightwardly (in FIG. **4A**) to a free end portion spaced near the contact leaves **266** and **267**.

Gradual pressing of the trigger lever **242** toward the handle housing (rightwardly in FIGS. **4** and **4A**) moves the arm **251** and hence the contact blade **253** progressively further into the handle **12** through a series of positions, three of which are indicated in broken lines at **253A**, **253B** and **253C** in FIG. **4A**.

The free (rightward in FIG. **4A**) end of the arm **251** is beveled at **272** to help it ride over the contacts **266** and **267** as the trigger lever **242** is sequentially squeezed more and more toward the handle **12**. The arm **251** is progressively resiliently bent, like a leaf-spring, as its free end rides over the fixed contacts **266** and **267**, to firmly press its contact blade **253** against the latter.

Thus, as the trigger lever **242** is pressed toward the handle **12**, the beveled free end of the arm **251** rides over the contact leaf **266** past its dotted line position **253A** and toward its dotted line position **253B**. As the free arm end approaches position **253B**, the contact blade **253** slides into electrical contact with

the contact leaf **266** and the motor contact **270** to establish electrical connection therebetween. The motor contact **270** resiliently bends to allow continued travel of the contact blade **253** and arm **251** further into the handle, as indicated in dotted line at **270B**, and to press firmly against the contact blade **253**. Given only a light pull on the trigger lever **242**, the arm **251** and contact blade **253** tend to stop in the position indicated in dotted lines at **253B**, by reason of the free end of the arm **251** colliding with the contact leaf **267**. In this "B" position, electric current is fed to the motor **36** only from half the battery collection, namely batteries **B1**, **B2**, **B3** and **B4** in FIG. **22A**. The motor **36** thus runs at only a preselected fraction of its full speed and the pump unit **100** outputs irrigation liquid pulses at a desired frequency and amplitude, which are less than the maximum available. The apparatus is thus operated in its low output mode. The colliding of the free end of the trigger arm **251** with the contact leaf **267** gives tactile feedback to the user, that the low output mode of the handpiece has been selected.

Further pulling in of the trigger lever **242** by the user causes the beveled free end of the arm **251** to bend rightwardly (FIG. **4A**) the contact leaf **267** to a dotted line position indicated at **267C**, allowing the free end of the arm **251** to override the contact leaf **267**, such that the contact blade **253** moves into its "full-pull" dotted line position **253C** and further bends the motor contact **270** its dotted line position **270C**. In this final position, the contact blade **253** establishes electrical contact between the motor contact **270** and the contact leaf **267**, thereby applying the full series voltage of all eight of the batteries **B1-B8** to the motor **36** to operate the latter at its full speed and thereby drive the pump unit **100** at its full output, namely

to provide irrigation liquid pulses out of the pump unit **100** at maximum pulse amplitude and frequency.

When the user releases the trigger lever **242**, the resiliently bent trigger lever **242**, due to its inherent resilience, springs back from its fully pulled-in position indicated in broken lines at **242P**, to its solid line rest position indicated at **242** (FIG. 4A).

Suction Hose

A flexible suction hose **280** (FIGS. 2 and 3) is led along within the housing (within the lower part of the housing in FIG. 3) past the drive unit **25** and pump unit **100**. The above-mentioned clamp plate **165** includes a tubular structure molded thereinto and defined by a forward nipple **282** in the handle **12** and, in coaxial fluid communicating relation therewith, a rearward nipple **283** which extends rearwardly out of the bottom end **164** of the handpiece handle **12**. The rear end portion **281** of the suction hose **280** is sealingly and fixedly telescoped over the front nipple **282**. A conventional flexible hose, not shown, is conventionally and sealing telescopable over the rear nipple **283** for connecting same to a conventional suction source, as schematically indicated at SS in FIG. 3.

The front end portion **284** of the suction nose **280** is sealingly telescoped over a rearward opening nipple **285** on a short suction conduit **286** (FIGS. 2, 3, 16, 17 and 18). The suction conduit **286** (FIG. 18) is fixed side by side, in piggyback fashion, on the periphery of the irrigation liquid conduit **143** and hence is a part of (preferably an integral plastic molded part of) the bellows housing **104**.

The clamp plate **165** serves several purposes. It provides a suction hose connection, bears on the irrigation liquid hose where it enters the handpiece housing, and helps align the rear (rightward in FIG. 4) end wall portions of the housing halves as they are assembled together, and in so doing, is itself fixed on the housing. In addition, the clamp plate **165** is of one piece, preferably a plastic molding, and is partially recessed into the handpiece so that it does not make the handpiece look any bigger.

Tip Unit

A tip unit **291** (FIGS. 8, 8A and 8B) is releasably fixable on the front end of the handpiece **10** and extends forward therefrom for applying irrigation liquid pulses and/or suction to a surgical site indicated schematically at SU in FIGS. 8 and 8B. The tip unit **291** (FIG. 8) comprises a coupling **292**, a front cover **293** fixed to the front of the coupling **292**, and an elongate hollow wand **294** extending forwardly from the coupling and front cover for aiming at a surgical site SU. The coupling **292**, cover **293** and wand **294** are preferably one piece molded plastic units. The wand **294** is preferably of clear plastics material.

The tip unit **291**, and more specifically the coupling **292**, is releasably fitted in fluid tight relation to the front of the bellows housing **104** of the pump unit **100** and is releasably latched within the open front end of the handpiece housing barrel **13** as hereinafter discussed.

More particularly, the coupling **292** (FIG. 8) comprises a shallow, forward opening cup **295** having a flat base wall **296** from which forwardly extends a

shallow peripheral wall **297**, thereby defining a forward opening recess **300**. Coaxial irrigation liquid nipples **301** and **302** extend fixing rearwardly and forwardly, respectively, from the base wall **296** and together define a coaxial bore **303** therethrough and through the base wall **296**. The rear nipple **301** is snugly but slidably receivable rearwardly into the open front portion of the liquid outlet conduit **143** of the bellows housing **104**. An O-ring **304** seats in an annular groove outward facing on the rear nipple **301** and sealingly engages the interior of the liquid outlet conduit **143** to prevent irrigation liquid leakage therebetween.

The wand **294** includes a coaxial, relatively small diameter, irrigation liquid outlet tube **305** which at its rear end is telescoped fixedly and sealingly within the bore **303** of the front and rear nipples **301** and **302** for receiving a pulsed flow of irrigation liquid from the irrigation liquid outlet conduit **143** of the bellows housing **104**.

The coupling **292** further includes a suction nipple **306** fixedly extending rearward from the base wall **296** in spaced parallel relation with the irrigation liquid nipple **301**. The suction nipple **306** is snugly insertable rearwardly coaxially into the front opening suction conduit **286** of the bellows housing **104**. An O-ring **310** is axially sandwiched between the rear end of the suction nipple **306** and a front facing annular step **311** at the rear end of the suction conduit **286** to prevent leakage therebetween.

The coupling **292** further includes a leaf spring-like, generally U-shaped latch arm **312** which extends rearward from the peripheral portion of the base wall

296, curves radially outwardly and forwardly, and extends forward past the front cover 293, in radially outwardly spaced relation from the wand 294. A wedge-shaped, transverse ridge 313 on the exterior base of the latch arm 312 is approximately centered between the front and rear ends of the latch arm. A circumferentially extending, radially inward protruding rib 314 (FIGS. 2, 3 and 8) on the interior face and at the open front end of the right housing part 15 (at the front end of the barrel 13) opposes the latch arm 312, immediately ahead of the ridge 313, with the tip unit 291 installed on the front end of the handpiece 10 as shown in FIG. 8. The ridge 313 has a front facing step which abuts interferingly with the housing rib 314 to releasably block removal of the tip unit from its installed condition shown in FIG. 8. To remove the tip unit from the front end of the handpiece, the user simply presses radially inward against the forward protruding end portion 315 of the springy latch arm 312, sufficient to radially inward displace the ridge 313 out of interfering relation with the rib 314 and thereby unlatch the tip unit from the front end of the handpiece. This allows forward removing the tip unit 291 from the open front end of the handpiece barrel 13 and removing of the irrigation liquid and suction nipples 301 and 306 from the liquid outlet conduit 143 and suction conduit 286 of the bellows housing 104.

The tip unit 291, or any alternative tip unit having a substantially identical coupling and front cover, can be installed operatively on the front end of the handpiece 10 by inserting same into the open front end of the handpiece barrel 13 so that the nipples 301 and 306 enter the liquid and suction conduits 143 and 286 respectively, to their position shown in FIG. 8. During this installation, the forward facing slope of the wedge

cross-section transverse ridge **313** slides rearwardly past the housing rib **314**, bending the springy latch arm **312** radially inward as generally indicated by the arrow L in FIG. 8, so that the wedge cross-section ridge **313** can snap rearwardly past the rib **314** at the open front end of the housing barrel **13**. Thus, the tip unit **314** can be slid axially into the front end of the barrel **13** and upon reaching its innermost position latches itself against unintended removal. In its installed condition of FIG. 8, the tip unit is substantially rigidly fixed with respect to the front end of the bellows housing **104** and hence with respect to the handpiece barrel **13**.

The front cover **293** (FIG. 8) comprises a plate **320** which extends radially of the wand **294** and of the length axes of the barrel **13** and the pump unit **100**. The peripheral shape of the plate **320** conforms to the cross-sectional shape of the front end of the barrel **13**, so that the perimeter of the plate **320** is substantially flush with the outer periphery of the open front end of the barrel **13**, and so that the plate **320** effectively covers the open front end of the barrel **13**. The peripheral shape of the plate **320** and cross-sectional shape of the front end of the barrel **13** in one embodiment is generally D-shaped, with a generally flat underside and a convexly curved top and sides. The plate **320** is not intended to seal the open front end of the barrel **13** and so need not tightly abut same. Since the peripheral wall **297** of the cup **295** fits easily within the open front end of the barrel **13**, the plate **320** extends radially outwardly beyond the cup **295**, as seen in FIGS. 8, 8A and 8B.

The front cover **293** includes an annular flange **322** extending axially rearwardly therefrom, radially

snugly into the cup **295** of the coupling **292** to bottom rearwardly and sealingly against a resilient gasket **321** which is disposed against the front face of the base wall **296** of the cup **295**. Respective holes in the gasket **321** loosely surround the front nipple **302** and leave fully open the communication between the interior of the suction nipple **306** and the interior of the cup **29**. The front cover **293** further includes a further annular flange **323** extending fixedly and forwardly from the plate **320** in coaxial alignment with the through hole **324** in the plate **320**.

The rearward annular flange **322** of the front cover **293** is fixedly secured within the cup **295** of the coupling **292** by any convenient means, for example by snap fit connectors on the opposing faces of such flange **322** and the peripheral wall **297** of the cup **295**. For example, the cup peripheral wall **297** may be provided with several circumferentially spaced rectangular holes **325** (FIGS. 8A and 8B) for snap fit reception therein of small radially outward extending protrusions schematically indicated at **326** on the outside of the rearward annular flange **322**.

The wand **294** further includes a relatively large diameter elongate suction tube **330** (FIGS. 8A and 8B) which loosely coaxially surrounds the irrigation liquid outlet tube **305** (FIG. 8) and extends substantially to the front end of the latter. The rear end portion **331** of the suction tube **330** is radially enlarged to provide a radially shallow, axially elongate flange protruding radially outward therefrom and which is axially trapped between the plate **320** and the gasket **321** backed by the base wall **296**. This serves to rigidly fix the suction tube **330** with respect to the coupling **292** and front cover **293**. A port **332** in the sidewall of the

suction tube 330 near its rear end communicates with a loosely surrounding annular chamber 333 defined between the plate 320 and base wall 296 of the front cover 293 and coupling 292 respectively.

The front end of the irrigation liquid tube 305 is held coaxially fixed within the front end portion of the surrounding suction tube 330 by any convenient means, such as radial, circumferentially spaced, webs 334 (FIG. 8). Accordingly, with a tip unit 291, of the general type above described, installed on the front end of the handpiece, as shown in FIG. 8, irrigation liquid pulses from the pump 100 pass forwardly within the liquid tube 305 and are projected from the front (left in FIG. 8) end thereof, as schematically indicated by the arrows PL. At the same time, liquid and particulate debris at the surgical site SU are drawn into the front (left in FIG. 8) end of the suction tube 330, pass rearwardly along the length thereof, through the port 332 into the chamber 333 and rearwardly through the nipple 306 and suction nipple 285.

With the exception of a few components such as the motor 44, the various electrically conductive contacts, the elongate insulated conductors, the various seal rings (for example 105, 154, 304 and 310, the gasket 321, as well as the suction and irrigation liquid hoses, the remaining major components, while possibly manufacturable of a variety of materials, are economically manufacturable of available molded plastics materials. For example, the valve member 131 may be of rubber or a synthetic substitute or similar resilient plastic. Similarly, the bellows 101 is preferably molded of a suitable resilient plastic material capable of the bellows expansion and contraction movements shown the drawings. The trigger unit 240 and the latch arm 312,

while of substantially rigid plastics material, are elastically bendable to the extent required to suit the present description. Similarly, components to be snap-fitted together are substantially rigid but have sufficient resilience to permit the required described snap fitting.

The present invention can be constructed at relatively low cost and is thus practically manufacturable as a disposable tool, both the handpiece **10** itself and the accompanying electric power supply unit **190** being disposable after use with a single surgery patient.

## OPERATION

The apparatus is quickly and easily assembled. The drive unit **25** (FIG. **12**) is assembled by, in effect, "dropping in" elements in proper sequence into the right (lower in FIG. **12**) shell **31** and covering same with the other shell **30**. More particularly, output gear **60**, face gear **54** and motor **36** (with attached pinion gear **53** and electric contacts **270** and **271**) are "dropped" into their respective locations in the upturned shell part **31**, in that sequence. The rectangular shaft **61**, topped by the eccentric member **62**, drops into the corresponding hole in the output gear **60** and the link member **51** drops onto the eccentric member. The other shell part **30** is then snap fitted over the filled shell part **31**, completing the drive unit **25**.

The pump unit **100** is assembled by coaxially-telescoping together its elements shown in FIG. **18** and then plugging into the inlet port **146** (FIG. **19**) the elbow **151** with the O-ring **154** and hose **160** assembled thereon.

The stub 120 (FIG. 18) of the drive unit 100 can then be snapped into the slot 122 of the drive unit fork 71 (FIG. 2) to connect the drive unit 25 operatively to the pump unit 100. The suction hose 280 can then be connected to the pump unit nipple 285 and to the nipple 282 on the clamp plate 165. Thereafter, the two assemblies above described can be laid into the rightward (FIG. 2) housing part 15 in the following order, namely liquid hose 160 (FIG. 4), drive unit 25 and pump unit 100 (FIG. 3) and, last, suction hose 280 and clamp plate 165.

The trigger unit 240 is then placed, with its rightward (FIG. 2) pivot stub 243 located in the corresponding boss 244 in the rightward housing part 15, and its arm 251 inserted through the hole 252 (FIG. 4A) into the interior of the handle portion of the rightward housing part 15, as seen in FIGS. 4 and 4A. The trigger arm 251 is "covered" by the rear portion 281 of the suction hose 280 in FIG. 3. The electrical contacts 262 and 263 are placed on their respective posts 255 and 256 in the rear portion of the rightward housing part 15 and the three forward electrical connectors 175 are secured respectively to the mentioned contacts 262 and 263 and the motor contact 271 (FIG. 4A). Thereafter, the leftward (FIG. 2) housing part 14 can be snap fitted to the rightward housing part 15 to close same and enclose the above mentioned apparatus, shown in FIG. 3, therein.

In the thus assembled handpiece, the drive unit is fixedly located by engagement of its drive axis bosses 84 and 85 (FIG. 5) in corresponding bosses in the housing parts 14 and 15 (see for example at 96 in housing part 15 in FIG. 2). Location of the drive unit 25 is assisted by the ribs 95 within the housing parts

14 and 15 and by snug resilient engagement of the drive unit 25 by the hoses 160 and 280 which flank it.

The drive unit shell 26 is configured to maintain the proper tolerances between meshing gears and related parts. Location of all the drive unit parts in the drive unit shell 26 reduces the need to maintain close tolerances in the larger and less specialized handle housing 11. Even the housing tolerances, for locating the pump unit 100 with respect to the drive unit 25 in the housing 11, need not be close since the bellows 101 are flexible enough to bend or otherwise distort to absorb minor mis-alignment or angulation of the reciprocation axis of the link member 51 with respect to the length axis of the pump unit 100. Indeed, the ribs 95 in the housing 11 permit pivoting of the drive unit 25 about the axis of the bosses 96 to allow the drive unit 25 and pump unit 100 to settle into their own working relative orientation. Accordingly, the precision in the handpiece housing 11 can be concentrated in aspects of fitting together of the two housing halves.

The electric power supply unit 190 (FIG. 22) is quickly and easily assembled. More particularly, the feet of the respective battery contacts 210, 211, 212 (FIGS. 26–28) are slid downward into their respective grooves (FIGS. 23A and 23B) in the pan 192 (FIG. 22) with their protruding toes resiliently gripping the sides of the grooves. The rear connectors 176 are connected to the battery contact fingers 224 and 225 in the order shown in FIG. 22A. The batteries B1-B8 are then slipped down into the pan in the orientation shown in FIG. 22 and into electrically conductive engagement with the battery contacts 210, 211 and 212 indicated in FIG. 22A. The rear portion of the liquid

hose **160** is laid atop the batteries as indicated in FIG. **23**, with the square flange **182** nonrotatable in the boss **235**, and the cover **193** is snap fitted atop the liquid hose **160** and battery filled pan **192**, as shown in FIG. **23**, to complete assembly of the power supply unit. The cap **185** is pressed onto the sharpened tip **184** to protect it prior to use.

The result is a disposable pulsed irrigation handpiece unit which is entirely self-contained, including its own power supply, and which is ready for use upon having its sharpened tip **184** plugged into a conventional irrigation liquid supply bag or the like, and a conventional manner.

It should be noted that virtually the entire handpiece **10** and power supply unit **190** can be assembled without need for any adhesives, the parts going together with friction or snap fits or, in the case of the joinder of the bellows housing **104** to the bellows **100** and elbow **151**, by being held together by surrounding structure which in turn is snap fitted together. This greatly eases and speeds assembly. A minor exception is that the fitting **180** is here adhesively fixed to the hose **160**.

To use the handpiece assembly in surgery, the cap **185** (FIG. **23**) is removed from the pointed tip **183**, which is then plugged into a standard output fitting on a conventional irrigation liquid supply bag. The power supply unit **190**, being fixed to the rear end of the irrigation liquid hose **160**, can be allowed to simply hang from the irrigation liquid supply bag (not shown but schematically indicated at S in FIG. **22**). By providing a substantial length of irrigation liquid hose **160** (for example **10** feet), the liquid supply bag S and

power supply unit **190** can be located well out of the way of the surgical team during use of the handpiece **10** at the surgical site. Even then, the power supply unit **190** is compact as compared to the adjacent conventional irrigational liquid supply bag (being very little larger than the eight conventional double AA batteries that it houses).

If suction will be desired at the surgical site, the handpiece nipple **283** (FIG. 3) can be connected by a conventional hose not shown to a conventional suction source SS (FIG. 3).

A variety of tip units **291** of differing characteristics (e.g. differing irrigation liquid spray patterns, etc.) may be made available for alternative mounting on the handpiece **10**. One example is shown in FIGS. 8, 8A and 8B.

In any event, the user selects a tip unit **291** having a wand **294** of desired configuration, and rearwardly inserts its coupling **292** into the front end of the handpiece **11**. More particularly, the nipples **301** and **306** of the tip unit are inserted coaxially rearwardly, in sealed relation (see FIG. 8) in the conduits **143** and **286** respectively of the bellows housing **104**. The resilient latch arm **312** enters the barrel **13** of the handpiece housing **11** adjacent to the bellows housing **104** until the plate **320** of the front cover **293** abuts the front end of the handpiece housing barrel **13**. In the last part of this tip installation movement, the wedge shaped ridge **313** (FIG. 8) on the latch arm **312** snaps past the rib **314** of the housing barrel **13** to positively prevent forward removal of the tip unit from the handpiece.

To use the apparatus for irrigation of a surgical site, the user grips the handpiece, either by the handle **12**, in a pistol-like manner, or where the barrel **13** joins the handle **12**, in a wand like manner. In either position, the user has one or more fingers that can bear on and press inwardly the trigger lever **242** from its inoperative rest position shown in solid line in FIG. **4A** forward and through its low speed and high speed positions indicated in broken lines at **253B** and **253C** in FIG. **4A**. In the first operative position **253B**, the blade **253** connects the low speed (here six-volt) contact **266** to the motor contact **270**. On the other hand, in the fully depressed condition of the trigger, indicated at **253C**, the blade **253** connects the high speed, **12** volt contact **267** with the motor contact **270**. Accordingly, the user can select between "off", lower power pulsing and high power pulsing.

In one embodiment pump stroke was about ¼". In one embodiment shown, the motor speed was about 15,000 rpm and the speed reduction afforded by the transmission was about 15-1, providing the eccentric with about 1,000 rpm speed.

Depending on the flow resistance of the particular tip unit attached to the handpiece, the liquid pulse frequency may change. In one example, a handpiece according to the invention produced about 1200 pulses per minute, dispensing about 1600 ml per minute of irrigation liquid in about 1.3 ml liquid pulses. The positive drive of the pump unit by the drive unit and the location of the pump unit, near the front end of the barrel **13** and in direct engagement with the tip unit, provides liquid pulses at the output of the tip unit which have sharp rise and fall slopes. Thus, the relationship of liquid pulse amplitude to time approxi-

mates a square wave form, more so than for example, the aforementioned device of U.S. Pat. No. 5,046,486. Further, the force applied to the pulses by the present apparatus is higher (somewhat above one Newton) than in that prior art device, at the full power position of the trigger.

In one embodiment according to the invention, a tab **316** (FIGS. **1** and 8B) extends forward from the front plate **320** of the front cover **293**, on the opposite side of the wand **294** from the latch arm **312**. To release the latch arm **312** from the housing **11**, the user can thus simply simultaneously grip with opposite fingers and pinch toward each other the latch arm **312** and tab **316**. In other words the tab **316** provides base toward which to pinch, or pull, the latch arm **312** to release the tip unit **291** from the handpiece **11**.

In the present invention, the liquid and suction nipples of the tip unit connect directly to the pump unit **100**, and do not contact any part of the handpiece housing **11**. Accordingly, neither the pump unit **100** nor tip unit **291** need fit with close tolerances the handpiece housing **11**. The connection of the tip unit to the handpiece housing is merely to latch the tip unit against loss from the handpiece housing and to casually cover the open front end of the handpiece housing. Accordingly, the liquid tight fit is between the nipples of the tip unit and conduits of the pump unit, not with the housing.

Although a particular preferred embodiment of the invention has been disclosed in detail for illustrative purposes, it will be recognized that variations or modifications of the disclosed apparatus, including the re-

arrangement of parts, lie within the scope of the present invention.

The embodiments of the invention in which an exclusive property or privilege is claimed are defined as follows:

1. A pulsed irrigation surgical handpiece, comprising:

a hollow housing comprising a handle;

an elongate trigger extending along the front part of the handle;

an irrigation liquid tube extending within said handle from the bottom of said handle along the front part of said handle to the top of said handle;

an electric motor spaced between the top and bottom of said handle and located in the rear portion of said handle behind said irrigation tube;

a pump comprising an axially expandable and contractible bellows driven by said electric motor and connected to said irrigation liquid tube for pumping irrigation liquid for delivery to a surgical site, said motor having top and bottom ends and a rotatable shaft extending longitudinally from said top end toward the top of said handle, said motor bottom end being spaced above the bottom of said housing, a first electrical connector extending from the bottom end of said motor toward said housing bottom, said electrical connector being for connection to an electric battery, a portion of said trigger lying adjacent

said motor and being responsive to movement of said trigger for effecting an electrical connection from said motor to an electric battery for electrically energizing said motor.

2. A pulsed irrigation surgical handpiece, comprising:

a hollow housing comprising a handle;

an elongate trigger movably mounted on said housing;

an irrigation liquid tube extending along said handle;

an electric motor spaced between the top and bottom of said handle and located in said handle adjacent said irrigation tube;

a pump comprising a member driven by said electric motor, said pump being connected to said irrigation liquid tube for pumping irrigation liquid for delivery to a surgical site, said motor having a rotating pinion gear rotatably engagable with and driving a face gear, said face gear being operatively drivingly coupled to an eccentric member for rotation of said eccentric member by said motor, said driven member opposing said eccentric member, and a yoke located between a portion of said driven member and said eccentric member for converting rotation of said eccentric member to reciprocation of said portion of said driven member.

3. The apparatus of claim 2 in which said motor has top and bottom ends and a rotatable shaft extending

longitudinally from said top end toward the top of said handle, said motor bottom end being spaced above the bottom of said housing, a first electrical connector extending from the bottom of said motor toward said housing bottom, said electrical connector being for connection to an electric battery, a lower portion of said trigger lying adjacent said motor and being responsive to pull in of said trigger for effecting a further electrical connection from said motor to an electric battery for electrically energizing said motor.

4. The apparatus of claim 2 including a suction adapter comprising a tubular structure and an engaging member fixed transversely thereon for fixedly engaging a free end wall of said handle bottom, said tubular structure having interior and exterior ends respectively extending into and out of said housing, said housing including a barrel extending forward from the top portion of said handle and a tip on the front end of said barrel, said suction tube being connected to said interior end of said tubular structure and running in said handle and barrel to a portion of said tip, said irrigation liquid tube being clamped to said handle bottom free end wall by said engaging member.

5. A pulsed irrigation handpiece, comprising:

a handheld handpiece housing and an associated pulsed irrigation liquid outlet for applying liquid pulses to a surgical site;

a powered driver in said housing;

a reciprocatingly driveable, expansible chamber pump in said housing connected to said driver

and outlet for pumping pulses of irrigation liquid through said outlet, said pump having a bellows, said pump having a hollow body with an end toward said bellows, said end having a first annular flange, said bellows being cup shaped and having an end open toward said body and defined by a second annular flange, said flanges being substantially coaxially telescoped one over the other;

a resilient O-ring seal radially resiliently pressed between radially spaced annular surfaces of said telescoped annular flanges, said radially spaced annular surfaces being of axial length exceeding the diameter of said O-ring, said bellows having an expandable and contractible bellows wall and a radially outward extending annular portion defining an annular groove therebetween, said second annular flange extending forward beyond said radially outward extending annular portion, said handpiece housing having spaced inward projecting ribs fixed therein, said ribs respectively engaging said body and entering said annular groove to fixedly grip therebetween said body and bellows and so positively prevent axial separation of said telescoped annular flanges of said body and bellows.

6. The apparatus of claim 5 in which said pump body has a cylindrical irrigation liquid inlet port, said handpiece containing an irrigation liquid supply tube slidably fitted to said body irrigation liquid inlet port, said handpiece housing surrounding said body and liquid supply tube.

7. A pulsed irrigation handpiece, comprising:

a handheld handpiece housing and an associated pulsed irrigation liquid outlet for applying liquid pulses to a surgical site;

a powered driver in said housing;

a reciprocatingly driveable, expansible chamber pump in said housing connected to said driver and outlet for pumping pulses of irrigation liquid through said outlet, said pump having a bellows, said pump having a hollow body with an end toward said bellows, said end having a first cylindrical flange, said bellows being cup shaped and having an end open toward said body and defined by a second cylindrical flange, said flanges being substantially coaxially telescoped one over the other;

a resilient O-ring seal radially resiliently pressed between radially spaced cylindrical surfaces of said telescoped cylindrical flanges, said radially spaced cylindrical surfaces being of axial length exceeding the diameter of said O-ring and said O-ring being of circular cross-section and thereby free to roll axially between said radially spaced cylindrical surfaces in response to relative axial movement between said telescoped flanges without loss of sealing between said cylindrical surfaces.

8. The apparatus of claim 7 in which said body and bellows have radially outward extending annular end portions carrying said axially telescoped cylindrical flanges, said handpiece housing having radially inward projecting ribs fixed therein and axially spaced to fixedly grip axially therebetween said telescoped

annular ends of said body and bellows to positively prevent axial separation of said body and bellows.

9. The apparatus of claim 7 in which said pump has a rear end portion driven by said driver and a front end portion, said liquid outlet comprising an elongate tubular tip having a front end for delivering irrigation liquid pulses to a surgical site and a rear end releasably connected directly and in liquid pulse receiving relation to said pump front end portion and releasably mechanically latched directly to said handpiece housing.

10. The apparatus of claim 7 in which said pump body has a cylindrical irrigation liquid inlet port, said handpiece containing an irrigation liquid supply tube having an elbow slidably fitted into said body irrigation liquid inlet port, said elbow carrying a surrounding seal ring bearing rollingly and sealing on the surrounding surface of said inlet port, said handpiece housing loosely surrounding said body and liquid supply tube and elbow and backing said elbow against sliding out of said inlet port.

* * * * *

# The United States of America

## The Director of the United States Patent and Trademark Office

*Has received an application for a patent for a new and useful invention. The title and description of the invention are enclosed. The requirements of law have been complied with, and it has been determined that a patent on the invention shall be granted under the law.*

*Therefore, this*

## United States Patent

*Grants to the person(s) having title to this patent the right to exclude others from making, using, offering for sale, or selling the invention throughout the United States of America or importing the invention into the United States of America for the term set forth below, subject to the payment of maintenance fees as provided by law.*

*If this application was filed prior to June 8, 1995, the term of this patent is the longer of seventeen years from the date of grant of this patent or twenty years from the earliest effective U.S. filing date of the application, subject to any statutory extension.*

*If this application was filed on or after June 8, 1995, the term of this patent is twenty years from the U.S. filing date, subject to any statutory extension. If the application contains a specific reference to an earlier filed application or applications under 35 U.S.C. 120, 121 or 365(c), the term of the patent is twenty years from the date on which the earliest application was filed, subject to any statutory extensions.*

Bruce A. Lehman

*Acting Director of the United States Patent and Trademark Office*

Brenda Moore

NOTICE

*If the application for this patent was filed on or after December 12, 1980, maintenance fees are due three years and six months, seven years and six months, and eleven years and six months after the date of this grant, or within a grace period of six months thereafter upon payment of a surcharge as provided by law. The amount, number of timing of the maintenance fees required may be changed by law or regulation. Unless payment of the applicable maintenance fee is received in the United States Patent and Trademark Office on or before the date the fee is due or within a grace period of six months thereafter, the patent will expire as of the end of such grace period.*

US006179807B1

(12) United States Patent
Henniges et al.

(10) Patent No.: US 6,179,807 B1
(45) Date of Patent: Jan. 30, 2001

(54) SURGICAL/MEDICAL IRRIGATOR WITH REMOVABLE TIP AND INTEGRATED SUCTION CONDUIT

(75) Inventors: Bruce B. Henniges, Kalamazoo; Kris D. Eager, Richland; David A. Burke, Portage; Douglas L. Tyler, Sr., Paw Paw; David H. Grafke, Battle Creek, all of MI (US)

(73) Assignee: Stryker Corporation, Kalamazoo, MI (US)

(*) Notice: Under 35 U.S.C. 154(b), the term of this patent shall be extended for 0 days.

(21) Appl. No.: [illegible]

(22) Filed: Oct. 22, 1999

Related U.S. Application Data

(62) Division of application No. [illegible], filed on Aug. 28, 1997

(51) Int. Cl.[7] ..... A61M 3/32

(52) U.S. Cl. ..... 604/38; 604/39

(58) Field of Search ..... 604/35, 39, 43, 604/21, 66, 67, 151, 902, 151

(56) Reference Cited

U.S. PATENT DOCUMENTS

| | | |
|---|---|---|
| D. 281,535 | 11/1985 | Addison et al. |
| D. 356,146 | 3/1995 | Palmerstone |
| 4,489,750 | 12/1984 | Helsing |
| 4,519,585 | 5/1985 | Addison et al. |
| 4,555,045 | 11/1985 | Addison |
| 4,561,451 | 12/1985 | Addison |
| 4,583,531 | 4/1986 | Blanchard |
| 4,635,631 | 1/1987 | Addison |
| 4,682,809 | 5/1987 | Helsing |
| 4,692,148 | 9/1987 | Olson |
| 4,741,678 | 5/1988 | Helsing |
| 4,770,640 | 10/1988 | Frazier et al. |
| 4,941,872 | 7/1990 | Sulis et al. |
| 4,957,483 | 9/1990 | Gasser et al. |
| 5,046,486 | 9/1991 | Grafke et al. |
| 5,269,750 | 12/1993 | Grafke et al. |
| 5,470,305 | 11/1995 | Azam et al. |
| 5,484,402 | 1/1996 | Saurus et al. |

OTHER PUBLICATIONS

Zimmer, The Zimmer Ver-A-Pulse Wound Debridement System, Dec., 1996, 2 pgs.

Zimmer, It's a Matter of Time The Pulsevac System, Dec., 1994, 6 pgs.

Zimmer, Pulsevac Wound Debridement System for Power and Control, Dec., 1996, 8 pgs.

Devol, *To Pulsed Lavage, The Choice Is Remarkably Simple*, Jan., 1995, 4 pgs.

Devol, *Performance Irrigation™ Systems, Pulsed Lavage for Wound Management*, Dec., 1995, 2 pgs.

Devol, *To Pulsed Lavage, The Choice Is Simple*, Sep., 1994, 3 pgs.

*Primary Examiner*—John D. Yasko
(74) *Attorney, Agent, or Firm*—Hyon, Theil, Bennett & Tanis, PC

(57) ABSTRACT

An irrigator (20) useful for surgical and medical procedures. The irrigator includes a handpiece (22) to which a tip assembly (30) is attached. The handpiece (22) includes a drain tube (50) that extends through the body of the handpiece and outside of the handpiece to the complementary vacuum system. The tip assembly includes a discharge tube (32) that is snap secured into the front of the handpiece and a suction tube (48) that mates to the open front end of the drain tube. A removable splash shield (101) is attached to the front end of the tip assembly. A trigger (44) allows one-handed control of, the position of the handpiece, the on/off state of the irrigator and the rate at which fluid is discharged from the irrigator. A rechargeable power pack (222) can be used to supply the compression current needed to activate a number of different handpieces at different speeds.

54 Claims, 15 Drawing Sheets

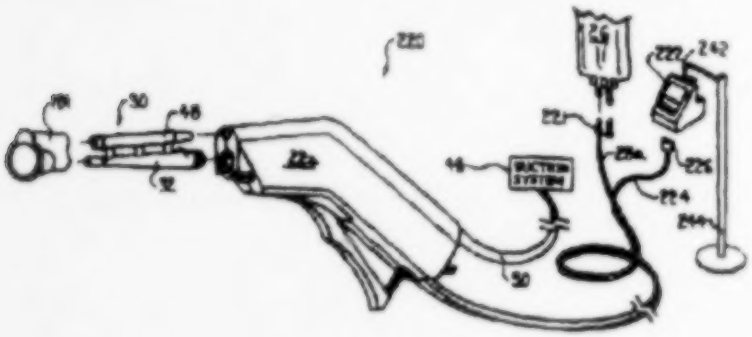

U.S. Patent Jan. 30, 2001 Sheet 1 of 15 US 6,179,807 B1

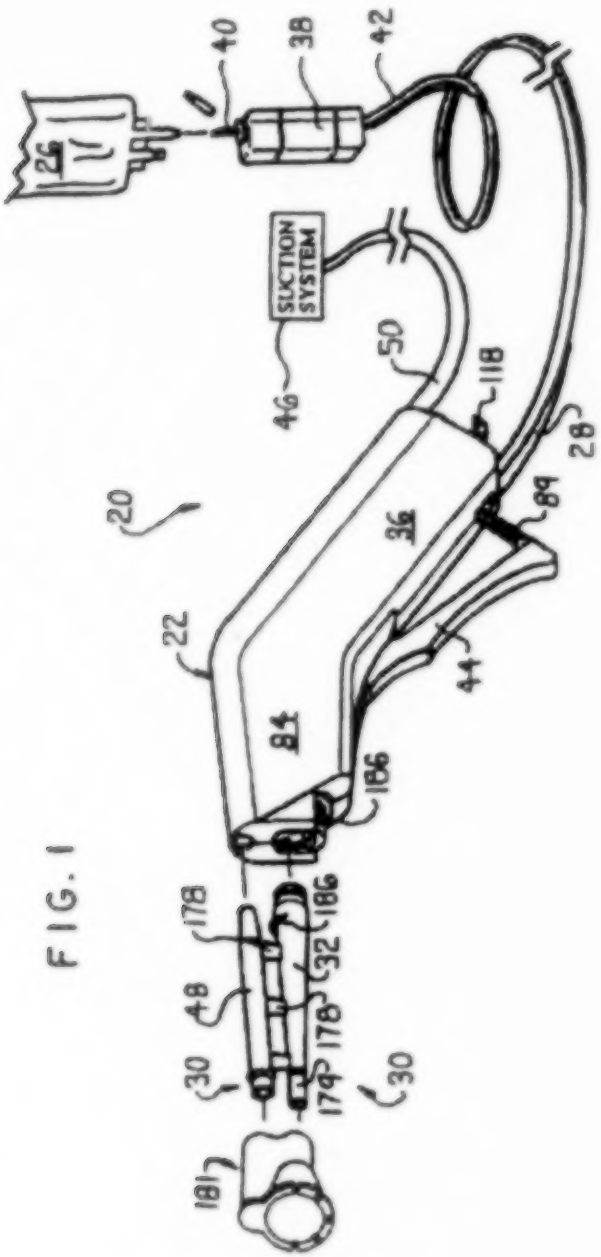


FIG. 1

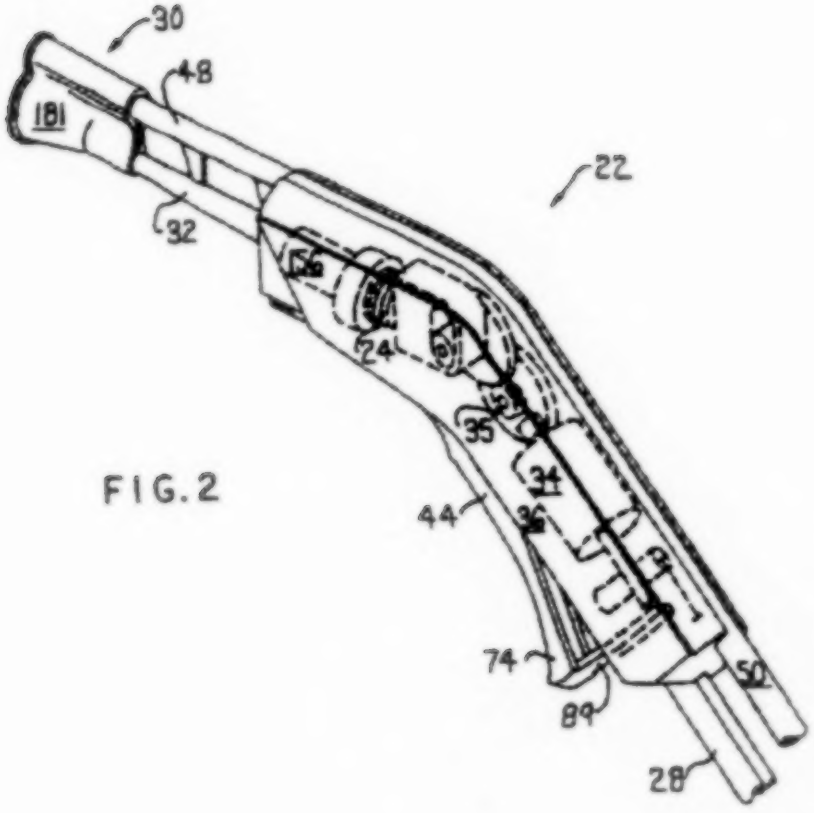


FIG. 2

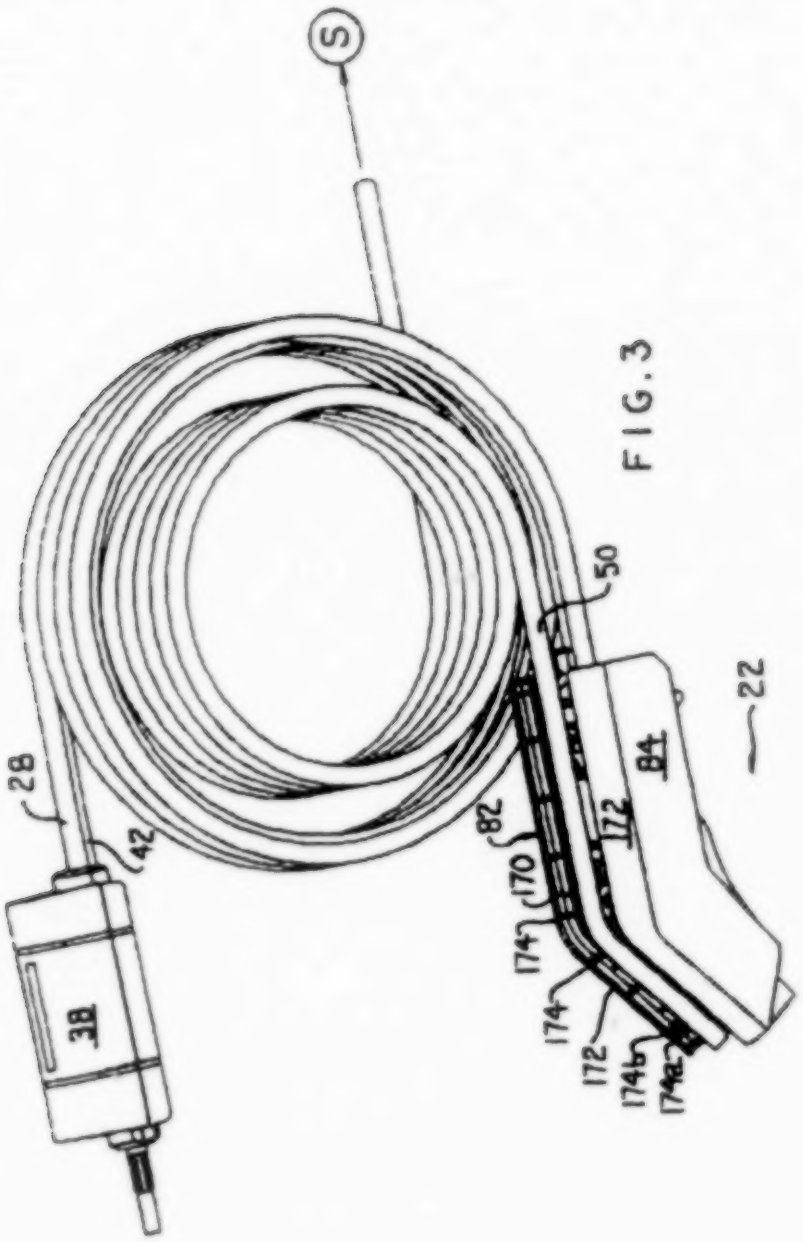


FIG. 3

U.S. Patent Jan. 30, 2001 Sheet 4 of 15 US 6,179,807 B1

FIG. 4

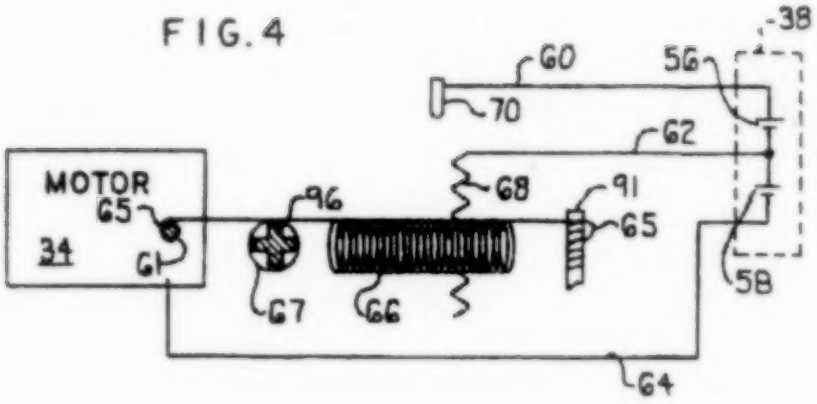


FIG. 14

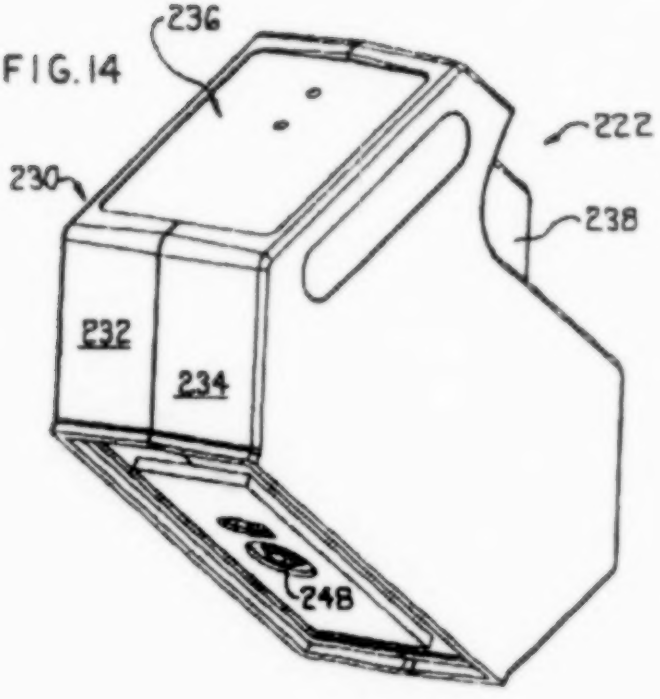

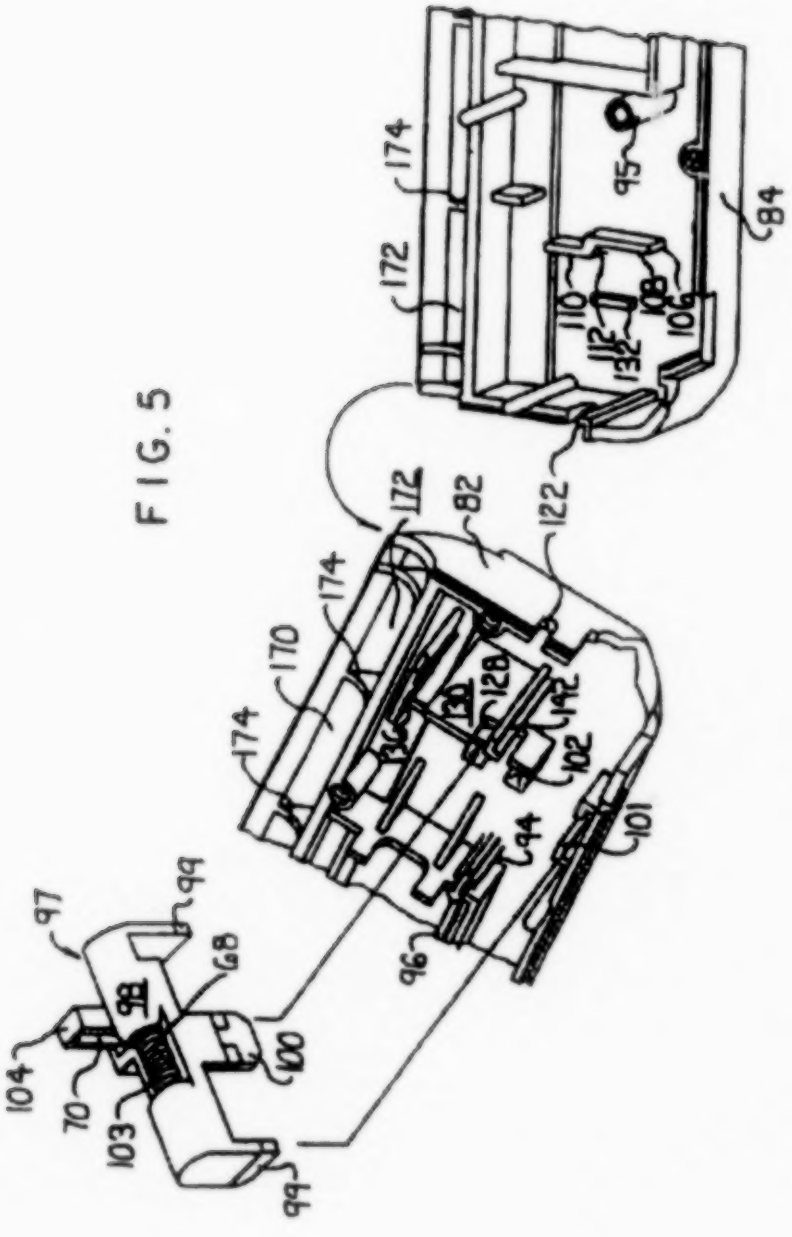
174
172
95
84
110
112
132
108
106
122
172
82
174
170
174
128
130
136
142
102
94
101
96
97
99
68
98
104
70
103
100
99

FIG. 5

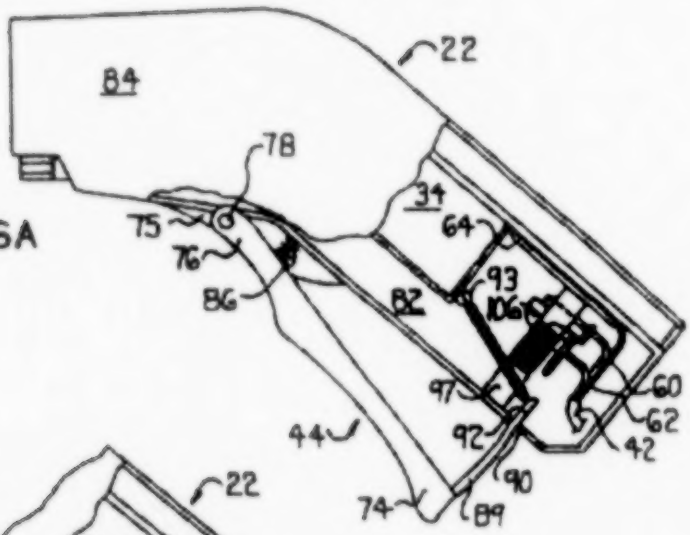


FIG. 6A

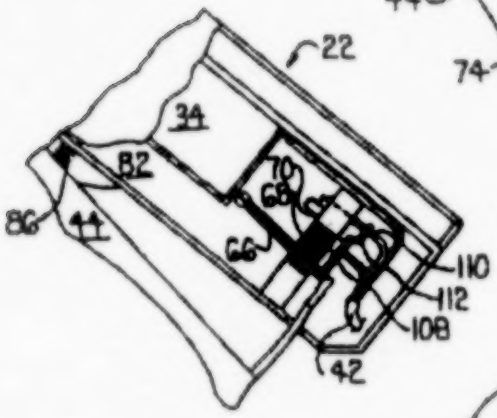


FIG. 6B

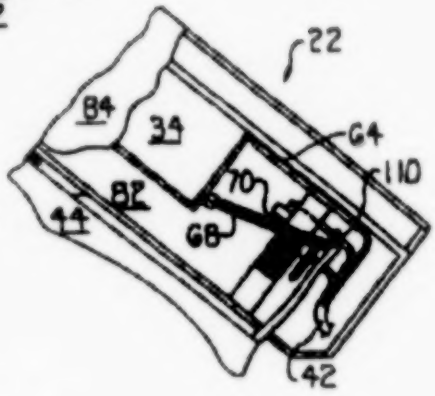


FIG. 6C

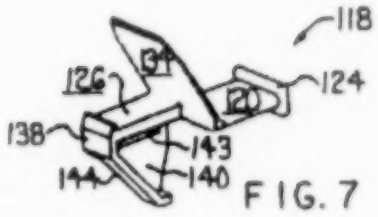


FIG. 7

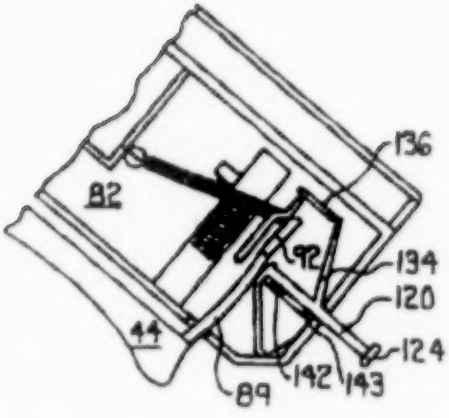


FIG. 7A

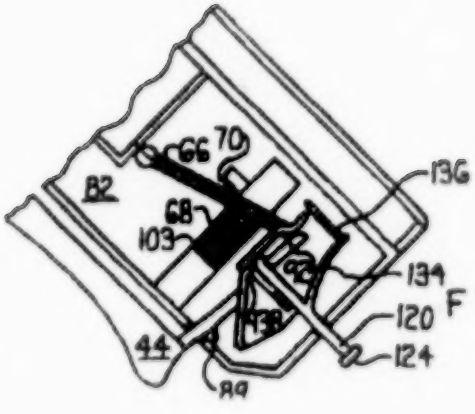


FIG. 7B

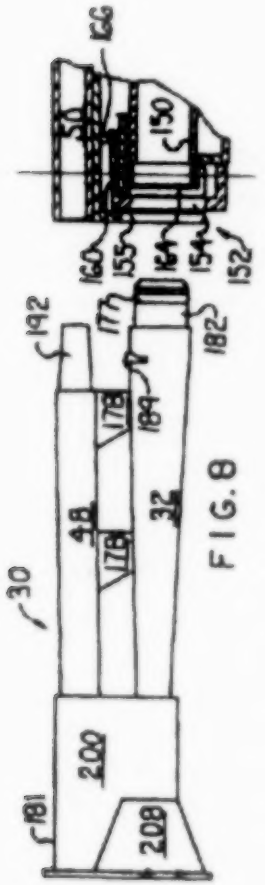


FIG. 8

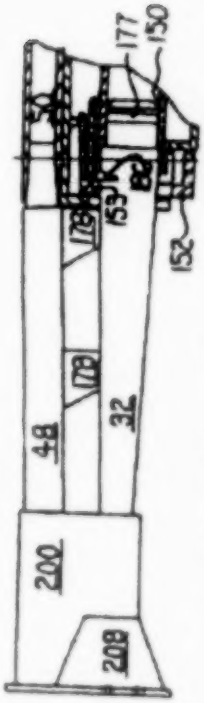


FIG. 11

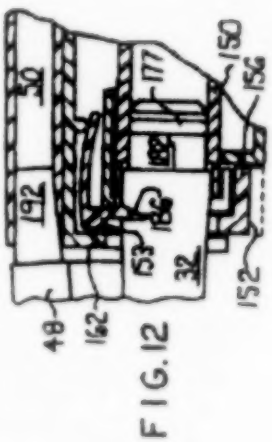


FIG. 12

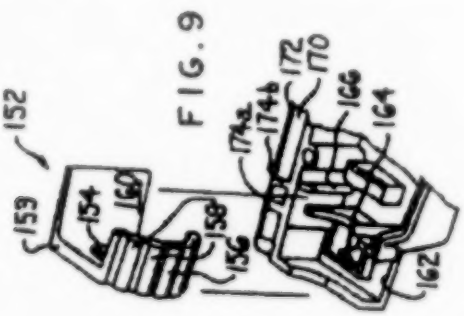


FIG. 9

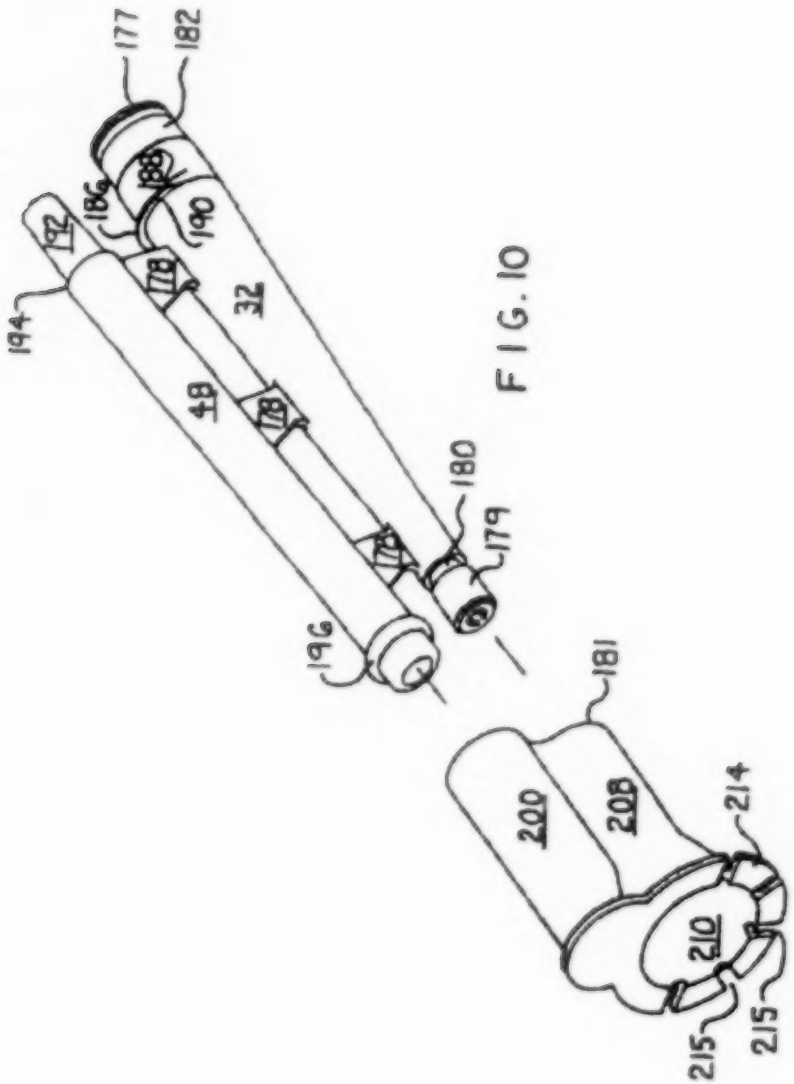
177
182
186
188
190
192
194
178
32
48
180
179
196
181
200
208
214
210
215
215

FIG. 10

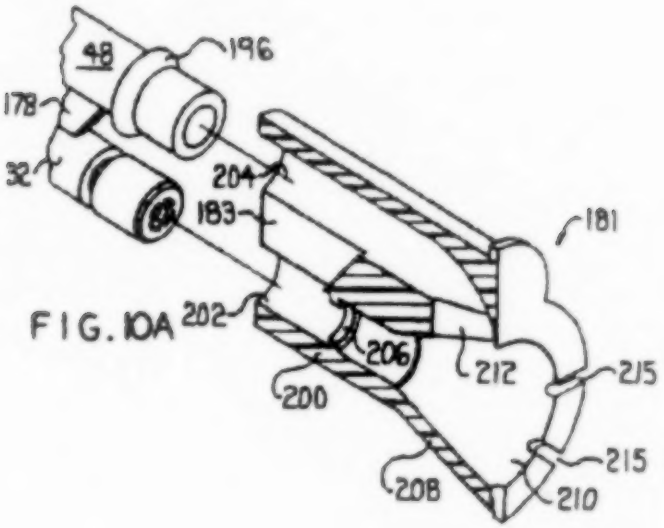


FIG. 10A

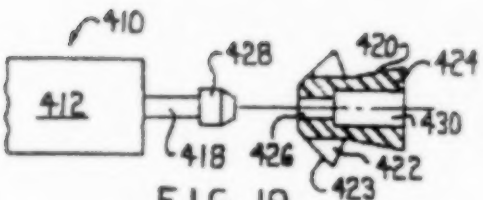


FIG. 19

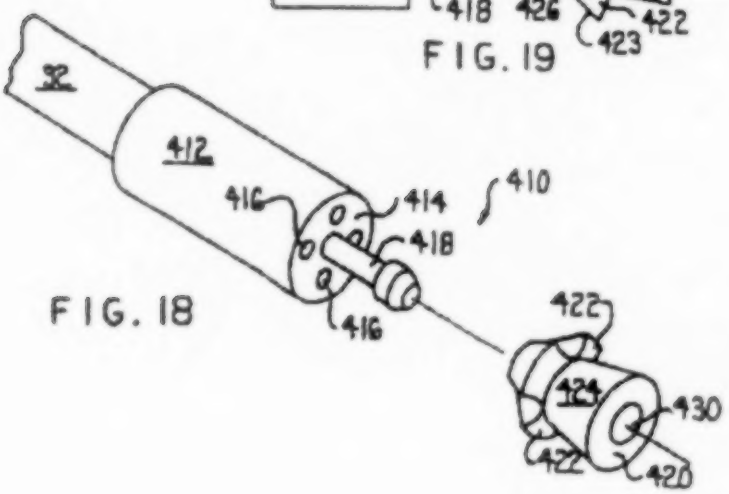


FIG. 18

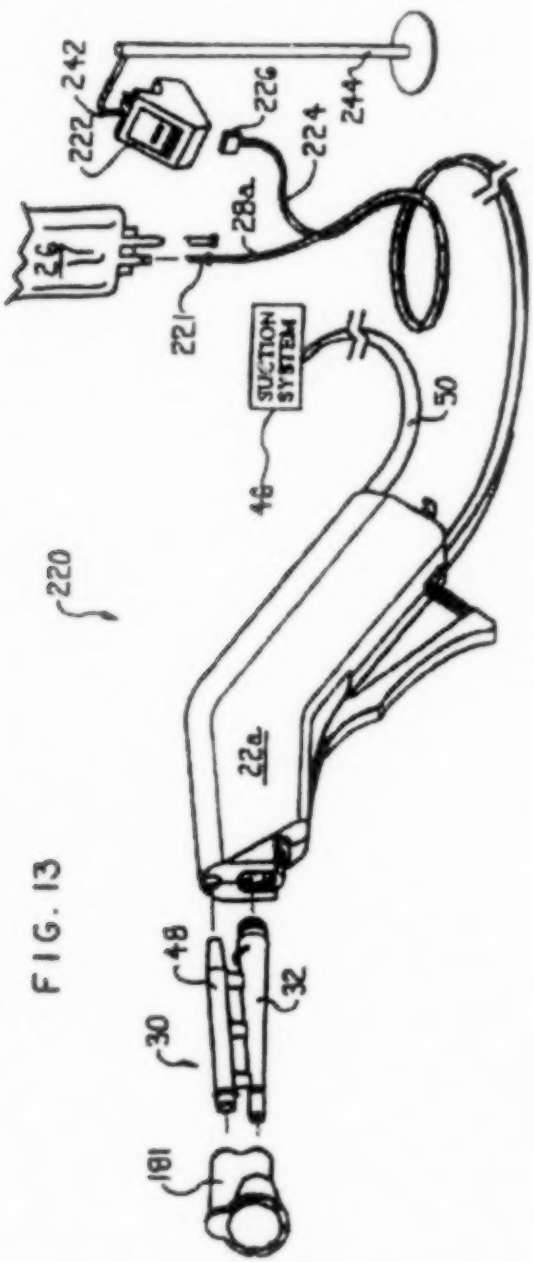
242
222
226
224
244
28a
26
221
SUCTION SYSTEM
50
46
220
22a
48
32
30
181

FIG. 13

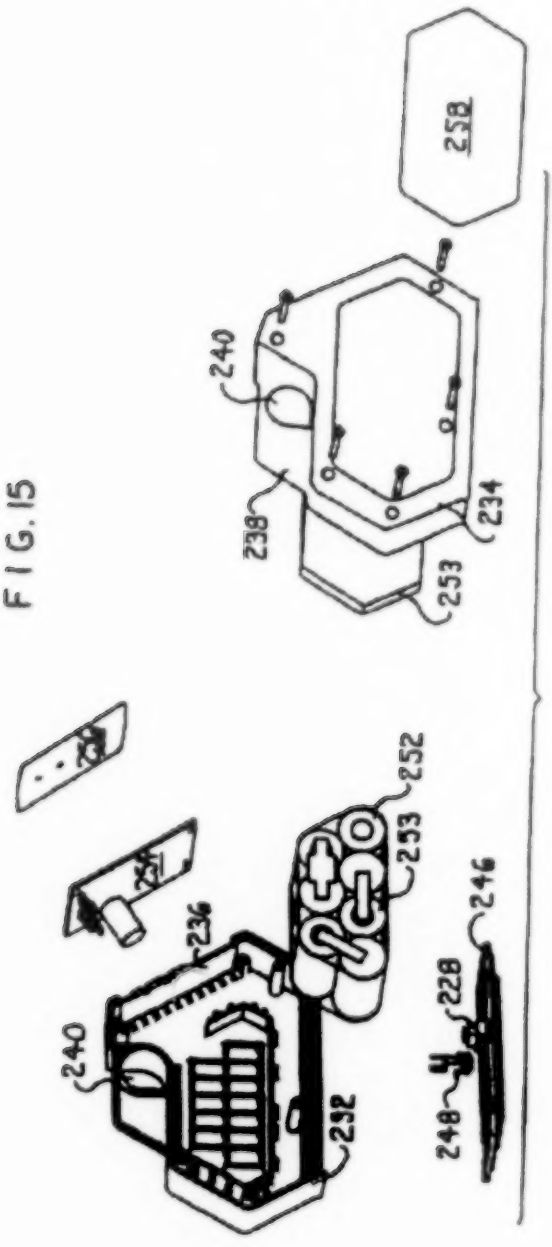


FIG. 15

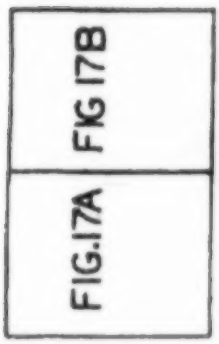
FIG.17A
FIG 17B

FIG.17

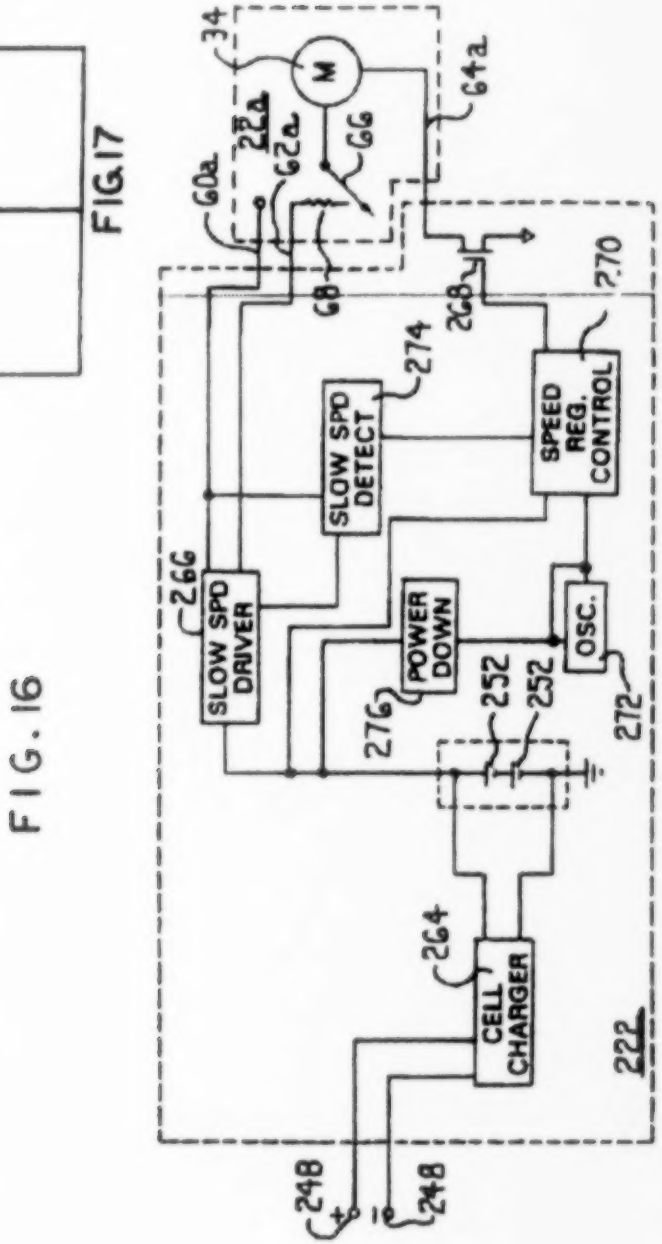
34
M
64a
22a
62a
66
60a
68
268
270
274
SLOW SPD DETECT
SPEED REG. CONTROL
266
SLOW SPD DRIVER
POWER DOWN
OSC.
276
252
252
272
264
CELL CHARGER
222
248
248

FIG. 16

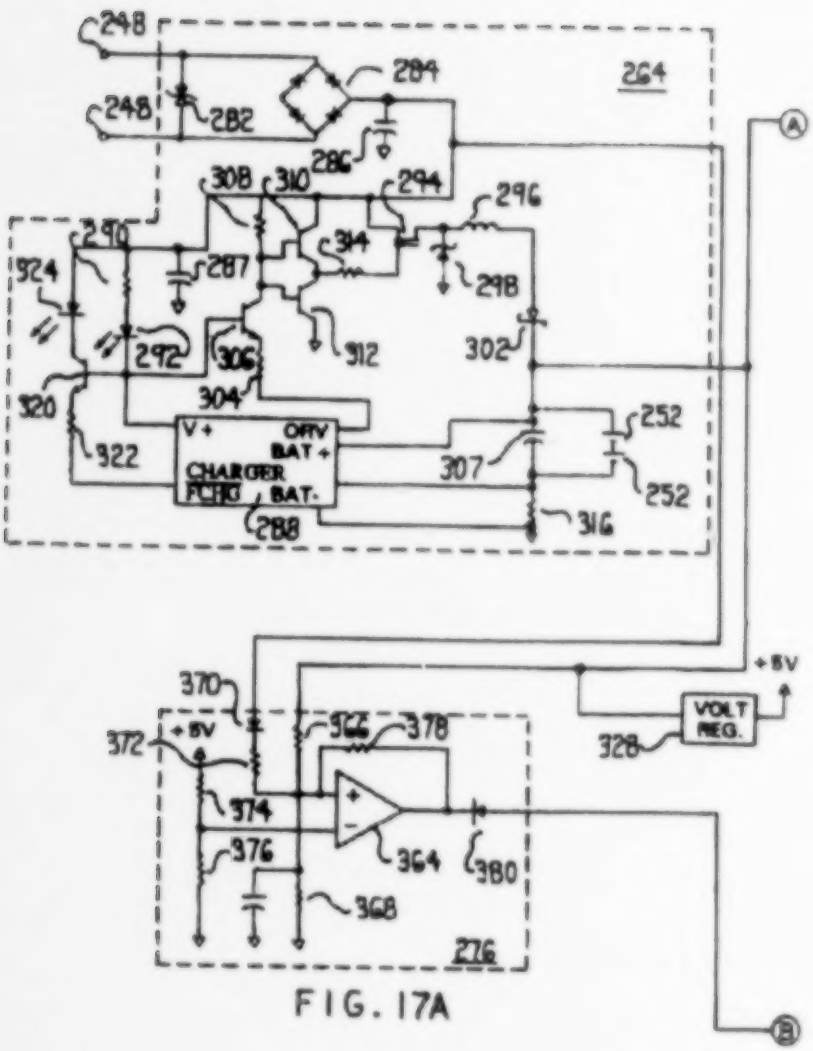
248
248
282
284
264
286
308
310
294
296
290
314
324
287
298
292
306
312
302
320
304
V+
OFFV
BAT+
CHARGER
FCHG
BAT-
322
307
252
252
288
316
A
+5V
370
VOLT REG.
328
372
+5V
366
378
374
376
364
380
368
276
B

FIG. 17A

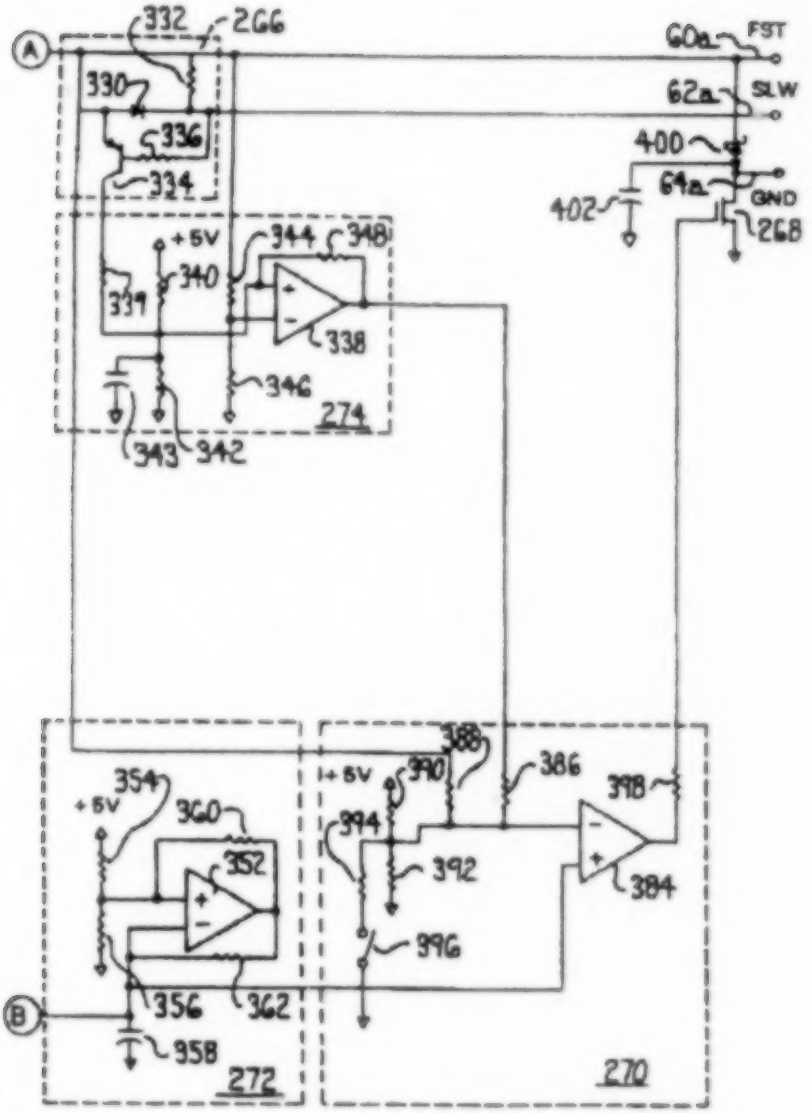
A
332
266
330
336
334
60a
FST
62a
SLW
400
64a
GND
402
268
+5V
344
348
340
339
338
346
274
343
342
B
354
+5V
360
352
356
362
958
272
388
390
386
398
394
392
384
396
270

FIG. 17B

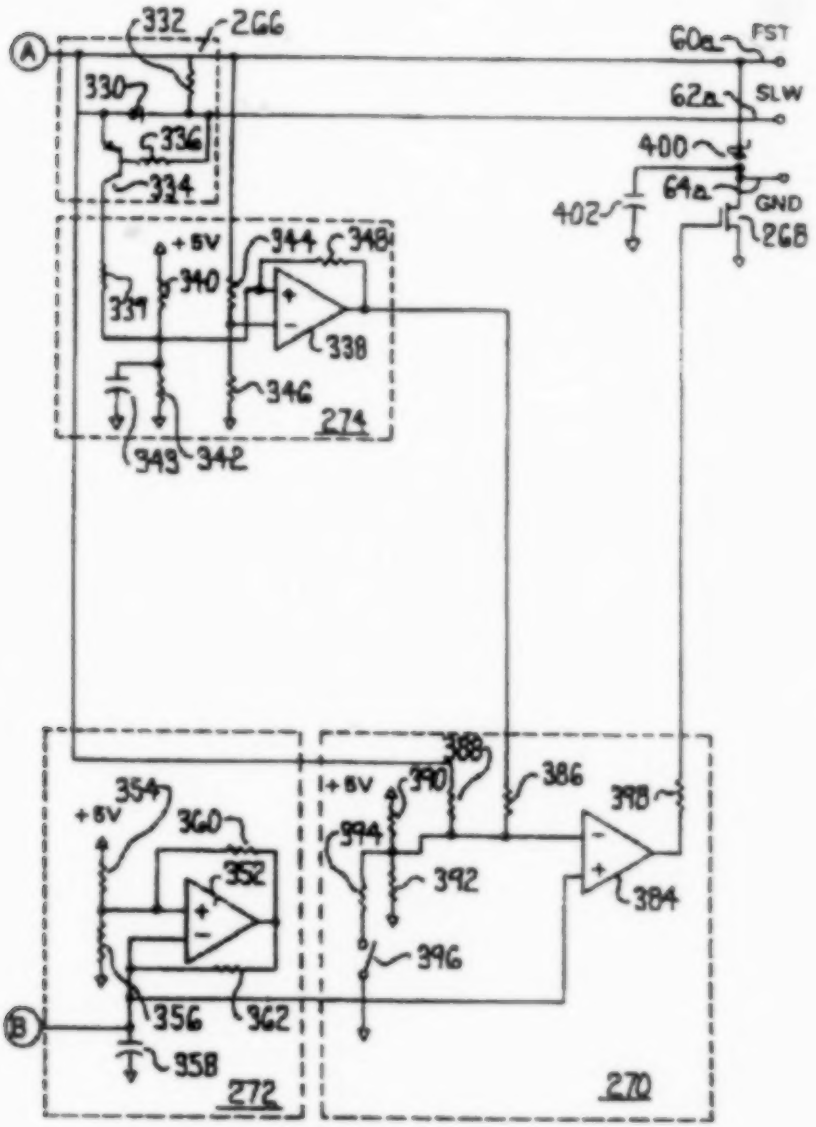
A
332
266
330
336
334
+5V
340
339
344
348
338
346
274
349
342
60a
FST
62a
SLW
400
64a
GND
402
268
B
354
+5V
360
352
356
362
358
272
388
390
386
398
394
392
384
396
270

FIG. 17B

# SURGICAL/MEDICAL IRRIGATOR WITH REMOVABLE TIP AND INTEGRATED SUCTION CONDUIT

This is a division of Ser. No. 08/915,431, filed Aug. 20,1997 pending.

## FIELD OF THE INVENTION

This invention relates generally to an irrigator useful for surgical and medical procedures and, more particularly, to an irrigation handpiece to which complementary tips can be readily coupled.

## BACKGROUND OF THE INVENTION

In many surgical and medical procedures, an irrigator is employed to deliver pulses of fluid to a particular location on or in the body of a person receiving medical attention. For example, during orthopedic surgery, an irrigator may be employed to deliver pressurized pulses of water or saline solution to an exposed surface of the bone in order to clean the bone. There are also some non-surgical procedures performed which likewise make it desirable to apply pulses of water to a specific site on an individual's skin. Thus, if an individual is suffering from some type of bed sore or some other type of skin wound, it is a common practice to use an irrigator to clean the wound prior to applying a dressing to the wound.

A common type of medical/surgical irrigator includes a handpiece to which a tip assembly is selectively attached. Often, inside the handpiece is a small pump that periodically delivers a quantity of pressurized fluid. Alternatively, the pressurized fluid is delivered to the handpiece from an external pump. The fluid is discharged through a discharge tube integral

with the tip assembly to the selected site on or in the patient. These irrigators deliver fluid in pressurized pulses for two reasons. One reason is that fluid pulses quickly strike the site to which they are applied and leave the site; this action serves to foster the desirable removal of debris from the site. Secondly, the discrete fluid pulses do not obstruct the view of the site as much as it can be obstructed when exposed to a continuous flow of pressurized fluid.

Most irrigator handpieces, in addition to having a conduit through which the sterile fluid is discharged, have a conduit through which the discharged fluid is removed from the site to which it is applied. Typically the fluid is initially withdrawn from the site through a suction tube, also part of the tip assembly. The fluid, as well as any debris in the fluid stream, then flow through a conduit integral with the handpiece. The handpiece suction conduit is connected to a second suction tube that is connected to a suction system separate from the irrigator. Thus, given their ability to essentially simultaneously clean a site on a patient and remove the debris generated by the cleaning process it should be readily apparent why irrigators have become useful tools for facilitating many medical and surgical procedures.

There are, however, some disadvantages associated with current surgical irrigators. One particular disadvantage associated with some known irrigators is how the tip assembly is connected to the handpiece. When these components are coupled together there should be two leakproof seals: a first seal between the handpiece and the discharge tube through which the irrigating fluid is discharged; and a second seal between the suction tube and the complementary hand-

piece conduit. Some tip assemblies sometimes do not properly mate with their complementary handpieces so as to result in a leaks. Leakage around a tip assembly suction tube-handpiece joint is especially prone to occur when the tip assembly is exposed to side loading. This side loading occurs when the tip assembly is pressed against tissue and flexes relative to the handpiece.

Still another problem associated with some irrigators is that the suction conduits integral to the handpieces occasionally clog. This clogging occurs because the material drawn away from the site to which the irrigator is applied is often in solid or semi-sold form. Sometimes, especially if this material is relatively large in size, the material will clog the suction conduit in the handpiece so as to significantly reduce the utility of the irrigator.

Moreover, it is desirable to provide medical personnel with some ability to control the rate at which irrigation fluid is discharged from the handpiece. Some handpieces are provided with stepped switches that are incrementally set in order to establish the voltage of the power signal applied to the motor so as to, in turn, set pump speed. One disadvantage of some known handpieces is that these switches are located in positions wherein, with a single hand, it is difficult, if not impossible, to both direct the handpiece and regulate the discharge of irrigating fluid.

Moreover, it also desirable to provide some means for controlling the pattern of the irrigating fluid discharged from the irrigator. To date, one of the more common practices is to simply provide the personnel using the irrigator with a number of different tip as-

semblies, each with its own nozzle, that causes the irrigating fluid to be discharged in a specific spray pattern. A disadvantage of this practice is that it increases the number of different tips that a medical facility is required to keep in inventory. Still another disadvantage of this practice is that if, during a procedure, a change in fluid flow patterns is desired the medical personnel must spend time switching tips.

Also, while it is common practice to provide handpieces with use-once, disposable battery packs, there are some circumstances when it may be more economical to provide a rechargeable power pack for repeatedly energizing different handpieces.

## SUMMARY OF THE INVENTION

This invention relates to a new irrigator for medical and surgical procedures with a tip assembly readily seals to the complementary handpiece, and a handpiece with a suction conduit that is not prone to clogging and a switch that allows easy control of pump speed. This invention also relates to a tip assembly for a handpiece with a nozzle that allows one to set the spray pattern of the fluid delivered by the nozzle. This invention further relates to a new irrigator with a rechargeable power pack that can provide drive signals of different potentials to the handpiece and that, even after being after discharged numerous times, can be fully recharged.

## BRIEF DESCRIPTION OF THE DRAWINGS

This invention is defined with particularity in the appended claims. The advantages of the invention may be better understood by referring to the following detailed description, in which:

FIG. 1 depicts the basic components of an irrigator of this invention;

FIG. 2 is a view of the handpiece of the irrigator that illustrates the basic components internal to the handpiece;

FIG. 3 is a perspective view illustrating the relationship of the drain tube to the handpiece;

FIG. 4 is a schematic and diagrammatic illustration of the components of the irrigator that regulate the on/off state of the irrigator as well as flow and the rate at which fluid is discharged from the irrigator.

FIG. 5 is an exploded view of some of the components internal to the handpiece that regulate the speed of the pump;

FIGS. 6A, 6B and 6C are side views illustrating the different positions of the components that regulate pump speed, depicting, respectively, their position when the irrigator is off, operated at low speed, and operated at high speed;

FIG. 7 illustrates the trigger lock employed to lock the irrigator into its high speed operating state;

FIGS. 7A and 7B illustrate how the trigger lock cooperates with the other components internal to the handpiece that lock the irrigator into its high speed operating state;

FIG. 8 is a side, partial cross-sectional view depicting how the tip assembly is inserted in the handpiece;

FIG. 9 is a perspective view of the tip lock internal to the handpiece;

FIG. 10 is a view depicting the basic components of the removable tip assembly including the detachable spray shield;

FIG. 10A is an enlarged view of the front end of the tip assembly depicting the removable shield in a cross-sectional view;

FIG. 11 is a partial cross sectional view illustrating how the tip assembly is locked into the front end of the handpiece;

FIG. 12 is a side, partial cross-sectional view depicting how the tip lock depressed to allow the removal of the tip assembly from the handpiece;

FIG. 13 is a view of an alternative irrigator of this invention wherein the handpiece is powered by a rechargeable battery pack;

FIG. 14 is an isometric, upwardly oriented view of the rechargeable battery pack;

FIG. 15 is an exploded view of the components internal to the rechargeable battery pack;

FIG. 16 is a block diagram of the electronic circuitry internal to the battery pack for both controlling the charging of the cells therein and their discharge by the handpiece;

FIG. 17 is an assembly drawing illustrating how FIGS. 17A and 17B are assembled together to form a

schematic diagram of the electronic circuitry of FIG. 16;

FIG. 18 is a view of a nozzle assembly that may be fitted to the forward end of the discharge tube of a tip assembly of the irrigator of this invention; and

FIG. 19 is a cross sectional view of the rotating head of the nozzle assembly of FIG. 18.

## DETAILED DESCRIPTION

FIGS. 1 and 2 illustrate a basic irrigator 20 of this invention. Irrigator 20 includes a handpiece 22 with a pump 24 that discharges pulses of fluid to a specific site on or in the body of the patient. The fluid is stored in a bag 26 and is gravity feed or suction drawn into the handpiece through a supply tube 28. The fluid is discharged from the front end of the handpiece 22 through a removable tip assembly 30. More particularly, tip assembly 30 has a discharge tube 32 in fluid communication with the pump 24 that is directed to the desired discharge site. The mechanical force for actuating the pump 24 comes from a motor 34. Mechanically, the rotational force developed by motor 34 is provided to pump 24 through a gear train 35. The motor 34 is mounted a lower section of the handpiece 22 hereinafter referred to as the handgrip 36.

Current for energizing the motor 34 is supplied by battery pack 38. In the depicted version of the invention, battery pack 38 is provided with a spike 40, for establishing a fluid communication path to the bag 26. The end of supply tube 28 is disposed in battery pack 38 and is connected to the base end of the spike 40, A power cord 42 extends between the battery pack 38 and the handpiece 22 for supplying the energization

current to the handpiece. The power cord 42 is shown as being adhesively secured to the outside of supply tube 28. A lever-like trigger 44 attached to the undersurface of the handgrip 36 is depressed to control the on/off state of the motor 34 and motor speed.

Irrigator 20 also presents a suction head to the discharge site so that the discharged fluid and any debris therein can be removed. The force for this suction head comes from a suction system 46 separate from the irrigator 20 and not part of this invention. The suction head is presented to the discharge site through the open end of a rigid suction tube 48 integral with tip assembly 30. Suction tube 48 is placed in fluid communication with suction system 46 through a flexible drain tube 50 that is mounted in the handpiece 22 and extends from the handpiece as a single tube so that it can be coupled to an inlet port, (not illustrated,) integral with the suction system 46.

The control of the drive signal applied to motor 34 to regulate both the on/off state of the irrigator and the rate of fluid discharge is now explained by initial reference to FIG. 4. It should be understood that internal to the battery pack 38 are two series connected cells 56 and 58. In some preferred versions of the invention, each cell 56 and 58 actually consists of four series-connected AA batteries. A circuit for supplying the energization current to the motor 34 is established by one of two power conductors 60 or 62 and a ground conductor 64 connected to the negative terminal of cell 58. Power conductor 60 is shown as being connected to the positive terminal of cell 56. Consequently, the potential across conductors 60 and 64 is the full potential developed across cells 56 and 58. Power conductor 62 is connected to the junction of cells 56 and

58; the potential across conductors 62 and 64 is just the potential developed by cell 58. Conductors 60, 62 and 64 are the conductors internal to power cord 42.

A movable spring 66 serves as the wiper that ties either conductor 60 or 62 to motor 34 to regulate the application of the energization voltage to the motor. One end of spring 66 is connected to a terminal 61 internal to motor 34 to which the positive potential is applied. Spring 66 has a first position wherein it is not connected to either conductor 60 or 62; this is the off position for the irrigator 20. When actuation of the irrigator 20 is desired, spring 66 is moved to a second position in which it is contact with the resistive wire of a wire-wound resistor 68 that is series-connected to conductor 62. In one version of the invention, resistor 68 is a 3 Ohm resistor. Resistor 68 serves as a variable load to regulate the fraction of the potential developed by cell 58 that is applied to the motor 34 When spring 66 is positioned across the full length of the resistor 68, there is the largest voltage drop across the resistor 68. Therefore, a relatively small voltage is applied to the motor 34. The motor 34 and, in turn, pump 24, operate at a relatively slow speed so as to result in the relatively slow discharge of fluid by the irrigator. When faster operation of the irrigator 20 is desired, spring 66 is repositioned along the length of resistor 68 to reduce the voltage drop across the resistor and increase the voltage applied to the motor 34.

When operation of the irrigator 20 at still higher speed is desired, spring 66 is reset to a third position wherein it is spaced from resistor 68 and abuts a fixed contact 70. Contact 70 is connected to the end of conductor 60. Consequently, when spring 66 abuts con-

tact 70, the full potential developed across cells 56 and 58, a high speed drive signal, is applied to motor 34 so as to result in the highest speed operation of the irrigator 20.

Spring 66 is from a conductive material such as plated beryllium copper. The position of spring 66 is set by the selective movement of trigger 44, now discussed by reference to FIGS. 5 and 6A. More particularly, trigger 44 is shaped to have an elongated body 74 located along the lower, downward facing surface of handgrip 36. A finger 76 extends forward from the front end of trigger body 74. Opposed pins 78, (one shown,) extend laterally away from the sides of finger 76 seat in openings, (not depicted) formed in webs 75 integral with the right and left shells 82 and 84, respectively that form the body of handpiece 22. Pins 78 thus pivotally secure trigger 44 to the handpiece 22. A coil spring 86 located between a portion of the body 74 adjacent finger 76 and the opposed surface of the handpiece 22 normally biases trigger 44 so that its body 74 is positioned away from the adjacent lower surface of handgrip 36. When trigger 44 is so positioned, spring 66 is spaced from both resistor 68 and contact 70 so as to place the irrigator 20 in the off state.

Trigger 44 is further formed to have a single leg 89 that extends from the end of the main body 74 distal from finger 76 into the handpiece 22. Shells 82 and 84 are formed to define a slot 90 spaced forward of the rear ends of the handpiece through which leg 89 extends. In the illustrated version of the invention, leg 89 has an arcuate profile centered around the axis of pins 78. A foot 92 is attached to the end of leg 89 seat-

ed inside handpiece 22. Foot 92 is greater in width than leg 89.

Returning to FIG. 4 it can be seen that the opposed ends of spring 66 are provided with hooks 65 to facilitate the securement of the spring to the motor 34. Spring 66 is formed with a loop 67 that extends around a post 93 adjacent motor 34 to foot 92 of the trigger 44. Post 93 is actually formed from a first, male post 94 integral with right shell 82 and a female post 95 integral with left shell 84. Loop 67 is fitted over a reduced diameter boss 96 integral with male post 94 that seats in female post 95. The hook 65 integral with spring 66 adjacent loop 67 is secured to the terminal 61 internal to motor 34. The opposed hook 65 is fitted around slots 91, (one slot illustrated,) formed in foot 92 of the trigger 44. When this spring 66 is so positioned, it extends across a non-conductive resistor support 97 secured inside the right shell 82, best seen in FIGS. 5 and 6A. Resistor support 97 has an elongated sleeve-like main casing 98 in which resistor 68 is seated. Tabs 99 extend perpendicular away from the longitudinal axis of main casing 98 at the ends of the casing. A third tab 100 extends from the center of main casing towards the right shell 82. Lower tab 99 and center-located tab 100 seat in complementary sockets 101 and 102, respectively, formed in right shell 82 to hold resistor support 97 in position. The upper tab 99 simply abuts the inside wall of right shell 82 to provide mechanical support for the resistor support 97.

Main casing 98 is formed with a window 103 which exposes the wire coil of resistor 68. Resistor support 97 further includes a three-sided mounting bracket 104 which is integral with main casing 98. Mounting

bracket 104 is shaped to hold fixed contact 70 which is shaped as U-shaped piece of conductive metal that is compression-secured in the mounting bracket.

The position of spring 66 relative to resistor support 97 is a function of the extent to which trigger 44 is depressed. When trigger 44 is not depressed, spring 66 is located against the lower portion of the main casing 98 so as to be spaced away from both window 103 and fixed contact 70 as seen in FIG. 6A. This is the position of the spring 66 when irrigator 20 is in the off state. When low speed operation of the irrigator 20 is desired, trigger 44 is partially depressed to position spring 66; across window 103, depicted by FIG. 6B. When the spring 66 is so positioned, it abuts resistor 68 so as to allow a low voltage drive signal to be applied to motor 34. By controlling the depression of the trigger 44, the extent to which resistor 68 is placed in series with conductor 62 is controlled. This positioning allows the low speed discharge of the irrigator 20 to be selectively set over a range of operating speeds.

When operation of the irrigator at high speed is desired, trigger 44 is fully depressed. The complete depression of the trigger 44 pivots spring 66 away from resistor 68 and against fixed contact 70, as seen by FIG. 6C. Once the spring 66 and contact 70 abut, the full potential across cells 56 and 58 is applied to the motor 34 so as to cause the irrigator 20 to run at its highest speed.

It will further be observed from FIG. 5 and 6A that left shell 84 is formed with a stepped rib 106 that projects into a space inside the handpiece 22 adjacent the foot 92 of trigger 44. More particularly, rib 106 ex-

tends generally perpendicularly relative to the longitudinal axis of the handgrip 36 portion of handpiece 22. Rib 106 is shaped to have a first, lower portion 108 and a second, upper portion 110 located slightly forward of lower portion 108. An angled step 112 in rib 106 serves as the transition section between the lower and upper sections 108 and 110, respectively.

When trigger 44 is depressed to operate the irrigator 20, the forward facing surface of foot 92 presses against the rearward facing surface of rib 106. When the trigger 44 is initially depressed, operated in the low speed state, foot 92 rides against the lower portion 108 of rib 106 as seen in FIG. 6B. Further depression of trigger 44 results in foot 92 seating in the space defined by step 112. If higher speed operation of irrigator 20 is desired, further depression of trigger 44 forces foot 92 out of step 112 and against the surface of upper section 110 of the rib 106. This movement of the trigger causes spring 66 to abut contact 70.

The seating of the foot 92 of trigger 44 against step 112 performs two functions. First, it holds the trigger 44 so that spring 66 is positioned so that there is a minimum voltage drop across resistor 68 and the spring will be spaced away from fixed contact. 70. Thus, the trigger 44 and spring 66 are set to cause the highest possible low speed drive signal to be applied to the motor 34. Secondly, the seating of trigger 44 provides a tactile indication to the person using the irrigator 20 that continued depression of the trigger 44 will cause the irrigator to transition from the low speed operating state to the high speed operating state.

Handpiece 22 further includes a trigger lock 118, now described by reference to FIGS. 5, 7 and 7A, that holds trigger 44 in the fully depressed/high speed operating position. Trigger lock 118 has a flat, rectangularly shaped base 120 that extends into the handpiece 22 through a slot 122 formed rear end of the handpiece. A foot 124 extends perpendicularly across the rear end of base 120 to provide a surface against which an individual can place his/her finger. Extending forward from base 120, trigger lock 118 has a neck 126. Neck 126, while coplanar with base 120, is partially offset to one side of the base. The neck 126 is seated in an opening 128 defined in a flange 130 that extends into the center of the handpiece from right shell 82. Opening 128 is closed by a smaller flange 132 integral with left shell 84 that is aligned with flange 130.

Trigger lock 118 is further formed with a flexible, cantilever spring arm 134 that extends upwards and forwardly from the interface between base 120 and neck 126. In order to facilitate the flexible nature of spring arm 134, trigger lock 118 is formed so that spring arm is relatively thin in comparison to the thickness of base 120 and neck 126. For example, in one version of the invention, trigger lock 118 is formed from high impact polystyrene plastic, base 120 and neck 126 have a thickness of approximately 0.080 inches and spring arm 134 has a thickness of approximately 0.014 inches. The upper edge of spring arm 134 abuts a horizontally extending flange 136 that extends into the center of the handpiece from right shell 82. Owing to the flexible nature of spring arm 134, when trigger lock 118 is pressed forward, the action of the spring arm 134 abutting flange 136 places a rearward-acting force on the trigger lock.

The trigger lock **118** further includes a head **138** that is located adjacent the forward end of neck **126**. Head **138** extends perpendicularly across neck **126** to project above the upper surface of the neck. There is also a web **140** that extends downwardly from neck **126**. Web **140** is formed to define a slot **143** immediately below neck **126**. When trigger lock **118** is fitted in handpiece, a lower, horizontally aligned portion **142** of flange **130** extends through slot **143**. This horizontal portion **142** of flange **130** thus provides structural support to hold trigger lock **118** in place. Web **140** itself provides structural rigidity to the neck **126**. In the illustrated version of the invention, a flange **144** extends perpendicularly across the forward edge of web **140**. Flange **140** is integral with head **138**.

After trigger **44** is placed in the high speed operating position, trigger lock **118** is employed to lock it in this position as depicted by FIG. **7B**. The person wanting to so set the irrigator **20**, presses in on the exposed portion of the trigger lock **118** to cause its forward movement. The forward displacement of the trigger lock **118** positions its neck **126** under the foot **92** of the trigger **44**. Downward movement of the trigger **44** upon the release of an actuating grasp is stopped by the trigger lock **118**. Instead, the trigger **44** is locked in position so as to hold spring **66** against contact **70**. Irrigator **20** is unlocked from the high speed operating state by pressing upwardly on the trigger **44**. Once the foot **92** of the trigger **44** clears head **138** of the trigger lock **118**, spring arm **134** exerts sufficient force on the trigger lock **118** to move the trigger lock rearwardly, away from the trigger **44**. The return of the trigger lock **118** to its initial position allows trigger **44** and spring **66** to be returned to their low speed or off operating positions.

As seen in FIGS. 2 and 8, pump 24 has its own sleeve-like, open ended discharge head 150. Pump 24 is seated in the forward end of the handpiece 22 so that discharge head 150 is directed towards the front end of the handpiece and extends out through an opening, (not identified,) defined by shells 82 and 84. A tip lock 152, seen in FIGS. 8 and 9, is positioned in the front of the handpiece 22 immediately forward of pump discharge head 150 for securing the tip assembly 30 to the handpiece. The tip lock 152 is formed from a single piece of flexible plastic such as a high impact polystyrene. Tip lock 152 is shaped to have a flat face plate 153 that is located in front of the open end of the pump discharge head 150. Face plate 153 is provided with an oval opening 154 through which the rear end of the discharge tube 32 is inserted into the discharge head 150. It will be further noted that the portion of face plate 153 that defines opening 154 has a beveled surface 155 around the upper portion of the opening 154. Tip lock 152 further includes an arcuately shaped base plate 156 that extends perpendicularly rearward from face plate 153. In the illustrated version of the invention, base plate 156 is provided with raised members 158 to facilitate manual depression of tip lock 152. A spring plate 160 integrally formed with tip lock 152 extends rearwardly from the top edge of face plate 153. Tip lock 152 is molded so that in its unbiased state, spring plate 160 projects approximately 96° away from face plate 153.

The upper two-thirds of tip lock 152 are seated within opposed L-shaped brackets 162 that extend forward from shells 82 and 84. Brackets 162 form the most forward facial surface of the front end of handpiece 22. The tip lock 152 is held in place by opposed L-shaped three-sided ribs 164 integral with shells 82

and 84. When the handpiece 22 is assembled, ribs 164 block downward movement of the spring plate 160 so as to prevent tip lock 152 from falling out of the handpiece. The base plate 156 is, however, exposed for manual displacement. Shells 82 and 84 are further formed to define a biasing bar 166 that extends across the width of the handpiece 22. Biasing bar 166 is positioned so as to abut the rear end of spring plate 160. Biasing bar 166 is thus the component internal to the handpiece 22 that acts in opposition to spring plate 160 to urge tip lock 152 downwardly.

Drain tube 50, as seen in FIG. 3, is seated in an elongated channel 170 that extends along the top of handpiece 22. Channel 170 is formed by two external spines 172, each spine being integrally formed with a separate one of shells 82 and 84. Each spine 172 extends the length of the shell 82 or 84 above the portion of the shell 82 or 84 that forms the enclosed body of the handpiece 22. In the depicted version of the invention, spines 172 are formed as curved walls. Also integral with shells 82 and 84 are webs 174, seen in FIGS. 3 and 9, that extend from the inner walls of spines 172 to the adjacent outer surfaces of the shells. Webs 174 are formed to have curved outer surfaces that define the circular cross-sectional profile of channel 170. Spines 172 are formed so that the there are pairs of opposed webs 174 integral with the shells 82 and 84 that are in planar alignment. Spines 172 are further dimensioned so that the top surfaces thereof do not abut.

When handpiece 22 is assembled, drain tube 50 is seated between shells 82 and 84 so as to be seated in channel 170. The opposed webs 174 impose a slight inwardly directed force of the drain tube 50 so as to

compress and secure the drain tube 50 to the handpiece. When the tip assembly 30 is coupled to the handpiece 22, suction tube 48 seats in the front end of the drain tube 50. In preferred versions of the invention, shells 82 and 84 are formed so that the two most forward webs, webs 174*a* and 174*b*, are positioned rearwardly away from the portion of the drain tube 50 in which the suction tube 48 is seated. This positioning ensures that, when the tip assembly 30 is coupled to the handpiece 22, the compression force developed by webs 174*a* and 174*b* holds drain tube 50 in place.

FIGS. 1 and 10 illustrate the basic components tip assembly 30. The discharge tube 32 and the suction tube 48 are connected to each other by a set of spaced apart webs 178. A nozzle 179 is fitted over the open forward end of the discharge tube 32 to direct the stream of fluid discharged therefrom. It will be rioted that the nozzle 179 is constructed to define an annular groove 180 around the front end of the discharge tube 32. A splash shield 181 is removably fitted over the open ends of the depicted tube assembly. The rear end of the discharge tube 32, the end that is fitted into the handpiece 22, is provided with a neck 182 that has a reduced outer diameter in comparison to the immediately adjacent portion of the tube. An O-ring 177 is fitted in a groove, (not identified,) formed immediately inward of the open end of the neck 182. The rear end of discharge tube 32 is further formed so as to have an upwardly extending flange 186. Flange 186 extends from a portion of the base having the relatively large outer diameter, as opposed to the reduced diameter neck 182, and extends upwards towards suction tube 48. The flange 186 is shaped so as to have a first tapered surface 188 that extends from the portion of the tube adjacent neck 182. The opposed sur-

face of the flange extends at a right angle away from the discharge tube so as to form a 90° step **190**.

The rear end of the suction tube **48** is formed to have a neck **192** with a reduced outer diameter. More particularly, it can be seen that the neck **192** is narrowest at its open end, the end seated in drain tube **50**, and widest around the portion that is closest to the rest of suction tube **48**. In the depicted version of the invention, a pronounced circular step **194** separates neck **192** from the rest of the suction tube **48** though that may not always be the case. It should be understood that while the outer diameter of neck **192** is less than the outer diameter of the main portion of discharge tube **48**, the inside wall of the tube, including neck **192**, is of constant diameter. An annular rib **196** extends around the outer surface of suction tube **48** immediately rearward of the front end of the tube. The purpose of rib **196** will be explained hereinafter.

Splash shield **181**, now described by reference to FIGS. **10** and **10A**, is formed of flexible material such as polyvinyl chloride. The splash shield **181** is formed so as to have a base section **200** of generally oval shape. Base section **200** is formed to define two bores **202** and **204**. Bore **202** serves as the discharge bore and is the bore in which the front end of the discharge tube **32** is seated. To facilitate the securement of the splash shield to the discharge tube/suction tube subassembly, base section **200** is formed to have an annular lip **206** that extends inside bore **202**. When the splash shield **181** is fitted over discharge tube **32**, lip **206** in the annular groove **180** between the discharge tube **32** and nozzle **179**.

Bore 204 serves as the suction bore and is the bore in which the front end of suction tube 48 is seated. Bore 204 is dimensioned so that when the splash shield 181 is seated over the discharge tube 48, annular rib 196 abuts the inner wall of base section 200 that defines bore 204 to form a seal around the end of the bore 204.

The base section 200 is further formed to define a slit 183 that extends between bores 202 and 204 and opens towards the rear of the splash shield 181. When the splash shield is seated on the discharge tube-suction tube sub-assembly, the most forward web 178 seats in slit 183. In some versions of The invention, the web 178 may fully seat in slit 183.

Extending forward from base section 200, splash shield 181 is shaped to have an open-ended discharge head 208. Discharge head 208 defines a generally conically shaped discharge chamber 210. Discharge bore 202 opens into the center of discharge chamber 210, at the apex of the chamber. Suction bore 204 extends forward of the open end of discharge bore 202, curves towards the longitudinal axis of bore 202 and chamber 210 and opens into the side of discharge chamber 210. In preferred versions of the invention, suction bore 204 is in fluid communication with the chamber 210 through an opening 212 located immediately rearward of the edge of the wall defining the open end of chamber 210.

Splash shield 181 is further shaped to have an outwardly directed lip 214 around the open end of discharge chamber 210. Lip 214 is shaped so that forward surface thereof, the surface that is pressured against tissue has small channels 215. Channels 215

extend from the outer perimeter of lip 214 to the discharge chamber 210.

FIGS. 8 and 11 illustrate how the tip assembly 30 is locked to the handpiece 22. As can be seen in these Figures, tip assembly 30 is positioned towards the front end of the handpiece 22 so that the neck 182 of the discharge tube 32 is inserted through opening 154 of tip lock 152 and into the discharge head 150 of pump 24. The tip assembly 30 is pushed towards the handpiece 22 until flange 186 of the discharge tube 32 passes through opening 154. As the discharge tube passes through opening 154, tapered surface 188 of flange 186 abuts the complementary beveled surface 155 around opening 154. Further insertion of the discharge tube 32, thus serves to displace the tip lock 152 upwardly. Once flange 186 passes beyond tip lock 152, spring plate 160 forces the tip lock to return to its initial position. Thus, as depicted in FIG. 11, the inner surface of face plate 153 of tip lock 152 seats against step 190 of flange 186 to prevent unintended removal of the tip assembly 30. When the tip assembly 30 is so positioned, O-ring 177 forms a seal between discharge tube 32 and the surrounding inside wall of discharge head 150 of pump 24.

The coupling of the tip assembly 30 to handpiece 22 also results in the coupling of suction tube 48 into drain tube 50. More particularly, as the discharge tube 32 is being locked in position, neck 192 of the suction tube 48 is simultaneously seating in the open front end of drain tube 50. Owing to the outwardly directed taper of neck 192, the neck forms its own compression seal against the inside wall of drain tube 50.

It should be understood that, in some preferred versions of the irrigator **20** of this invention, handpiece **22** and tip assembly **30** are designed so that the distance between the front surface of the handpiece and the trailing edge of the closest web **178** is between 0.015 and 0.075 inches. In still more preferred versions of the invention, this distance is approximately 0.030.

Tip assembly **30** is uncoupled from the handpiece **22** by the simple upward depression of base plate **156** of tip lock **152**. This action causes the tip lock **152** to move upwardly relative to the handpiece as illustrated in FIG. **12**. This displacement of the tip lock **152** serves to space the portion of face plate **153** that defines the upper portion of opening **154** away from tip assembly flange **186**. Once this separation occurs, the tip assembly **30** is simply pulled away from the handpiece **22**.

Once the tip assembly **32** is coupled to handpiece **22**, the irrigator **20** is ready for use. The person using the irrigator only needs one hand to both grasp irrigator **20** and to depress trigger **44** that controls the on/off state of the irrigator and the rate at which it discharges fluid. Should continual high-speed operation of the irrigator be required, all one needs to do is depress trigger lock **118** to hold the trigger in the correct position. Irrigator **20** is then unlocked from high-speed operation by simple depression of trigger **44**.

When suction system **46** is actuated, the suction it draws causes a suction head to develop at opening **212** in the splash shield **181**. Since opening **212** is located relatively close to the open end of discharge chamber **210**, water and debris are immediately drawn into suc-

tion bore **204** upon their movement away from the surface against which the splash shield **181** is placed. This minimizes the extent to which material swirls or otherwise moves through the discharge chamber **210**. An advantage of the immediate removal of this material is that it eliminates the extent to which matter in the discharge chamber **210** obstructs the application of pulses of fluid to the surface to which the irrigator **20** is applied.

In versions of the invention wherein the splash shield **181** is provided with channels **215**, the channels serve as conduits through which air is drawn into the discharge chamber **210**. The venting of air into the discharge chamber around the perimeter of the splash shield-body site interface prevents the tissue still part of the patient from being unintentionally separated from the site to which the irrigator **20** is applied.

Still another advantage of the irrigator **20** of this invention is that splash shield **181** is snap fitted to the rest of the tip assembly **30**. This makes it possible to provide different shields that can be used with a single discharge tube-suction tube subassembly. Consequently, a medical facility does not have to maintain an inventory of different tip assemblies, the only difference between the individual assemblies being their splash shields.

The fluid and other material drawn through the suction tube **48** flows into the suction system **46** through drain tube **50**. Since neck **192** of suction tube **48** seats in drain tube **50**, there is essentially no leakage of the fluid and material as it flows into the drain tube. This is even the case when, owing to side load-

ing, the axis of suction tube 48 angles out of alignment with the axis of the handpiece 22.

Moreover, the diameter of the bore through drain tube 50 is greater than the diameter of the bore through suction tube 48. For example, in some versions of the invention, the diameter of the inside wall of suction tube 48 is approximately 0.200 inches and the diameter of the inside wall of the drain tube 50 is 0.250 inches. Thus, the interface between the two tubes 48 and 50 is not a constriction that could potentially serve as a clog point for material passing through the tubes. Moreover, owing to the positioning of drain tube 50 along the upper outer surface of the handpiece 22, the degree of curvature of the tube is kept to a minimum. In many preferred versions of the invention, the handpiece is formed so that drain tube 50 subtends an arc of greater than 90° and, more preferably, approximately 140° and the inner radius of the tube is greater than 0.75 inches and, in still more preferred versions of the invention, between 0.85 and 0.90 inches. Also, since there is not a "third" tube, connecting the portion of the drain tube 50 internal to the handpiece 22 with its downstream extension, the need to provide an additional fluid connection port to the handpiece is eliminated. The elimination of this fluid connection port, in addition to its cost savings, eliminates another connection point at which the material in the drain tube 50 could potentially clog the tube. Thus, the irrigator 20 of this invention is further designed to minimize the extent to which the material drawn through drain tube 50 will clog the tube.

Still another feature of this invention is that since spines 172 do not abut, drain tube 50 is visible along the top of the handpiece 22. The drain tube 50 itself is

formed out of transparent material. Thus the person using the irrigator need only look clown at the handpiece to view the material being drawn away from the site at which the irrigator is applied. This visual exposure of the drain tube **50** further makes it possible for medical personnel to monitor fluid and, material flow through the portion of the drain tube disposed in the handpiece **22**.

An alternative irrigator **220** of this invention is now initially described with respect to FIG. **13**. Irrigator **220** includes a handpiece **22***a* that is physically similar in structure and function to above described handpiece **22**. Tip assembly **30** is attached to the front of handpiece **22***a* to provide the tubes that serve as conduits through which fluid is discharged from the handpiece and a suction head is presented at the site to which the irrigator is applied. Irrigating fluid is supplied to handpiece **22***a* from bag **26** through supply tube **28***a*. A spike **221** located at the end of the supply tube **28***a* makes the fluid connection between the bag **26** and the tube. Power for energizing the handpiece **22***a* comes from a power pack **222** that is positioned outside the sterile field in which the handpiece **22***a* and tip assembly **30** are employed. The current from power pack **222** is applied to the handpiece **22***a* through a power cable **224**. Power conductors **60***a* and **62***a* and ground conductor **654***a* (FIG. **16**) are disposed within power cable **224**. A plug **226** at the end of power cable **224** plugs into a complementary socket **228** in the power pack **222**. In many preferred versions of the invention, the portions of the supply tube **28***a* and power cable **224** that extend from handpiece **22***a* are adhesively secured together. Often power cable **224** is longer than supply tube **28***a* to allow the power pack **222** to be placed at a more distal location to the sterile

field at which the irrigator **220** is being used than bag **26**. The adhesive employed to secure the supply tube **28***a* and power cable **224** is selected to allow these conduits to be readily separated to the extent needed to facilitate the placement of the power pack **222** outside of the sterile field.

The power pack **222**, as seen in FIGS. **14** and **15**, includes a housing **230** formed out of two shells **232** and **234** and a base plate **246**. Shells **232** and **234** are formed to provide the housing **230** with an indicator face **236** that extends diagonally away from the bottom surface of the power pack **222**. A handle **238** with a finger hole **240** extends downwardly below the portion of the housing **230** that defines indicator face **236**. Finger hole **240** performs two functions. First, it provides an opening for a person to grasp the power pack **222** so that it can be easily handled. Secondly, finger hole **240** serves as a opening which allows the power pack **222** to be mounted to a horizontally extending arm **242** of an IV pole **244** in a surgical suite (FIG. **13**).

A base plate **246** is secured between shells **232** and **234** and forms the bottom surface of the power pack **222**. A DC power plug **248** is mounted to base plate **246** to provide a connection between a charger, (not illustrated) and the power pack **222**. When the power pack **222** is charged, base plate **246** is positioned against a complementary surface of the charger from which a charger plug, complementary to plug **2483**, extends.

Power pack **222** is further shaped so that socket **228** to which power cable plug **226** is connected is also fitted to base plate **246**. This arrangement ensures that, when the power pack **222** is plugged into the

charger, it cannot simultaneously be used to energize the handpiece 22*a*. This prevents current from being directly supplied from the charger, which may not have the voltage protectors required for real-time patient connection, to the handpiece 22*a*.

Internal to the power pack 222 is a cluster of rechargeable cells 252. In the depicted version of the invention, power pack 222 is provided with seven series connected NiCad cells 252. Each cell 252, when fully charged can develop a potential of 1.2 Volts. A foam pad separates cells 252 from shell 234. A circuit board 254 is mounted below the portion of the housing 230 that defines indicator face 236. Circuit board 254 carries the components forming the circuitry that regulates the charging and discharging of cells 252. FIG. 15 further illustrates the label 256 positioned over indicator face 236 and the label 258 positioned over the side of the housing 230.

In preferred versions of the invention, power pack 222 is designed to have a center of gravity that is below and aligned with the center of finger hole 240. This construction facilitates the balancing of the power pack 222 when it is suspended from arm 242 of the IV pole 244.

FIG. 16 is a block diagram of the circuitry internal to power pack 222 that controls the charging and discharging of cells 252. The DC power plug 248, represented as opposed terminals, is connected to a cell charger 264. The cell charger 264 charges the cells 252 at one of two rates as a function of the potential across the cells.

Power pack 222 is configured to provide a pulse width modulated DC signal to handpiece 22*a*. The pulse is nominally one of two widths and is a function of the setting of the spring 66 internal to handpiece 22*a*. More particularly, when spring 66 is connected to conductor 60*a*, pulses having a relatively long "on" period are applied to the handpiece 22*a*; these pulses function as a high speed drive signal to the handpiece. When spring 66 is connected to conductor 62*a*, pulses having a relatively short "on" period are applied to handpiece 22*a*; these pulses function as a low speed drive signal to the handpiece. The potential of the low speed drive signal applied to motor 34 is further reduced to the extent spring 66 is in series with resistor 68.

The potential across the cells 252 is applied to handpiece 22*a* through either power conductor 60a or 62a and ground conductor 64*a*, all internal to power cable 224. The positive terminal of the cluster of cells 252 is connected to either power conductor 60*a* or power conductor 62*a* through a slow speed driver 266. Ground conductor 64*a* is selectively tied to the ground internal to the power pack 222 through a FET 268. The on/off period of FET 268 controls the width of the DC pulses applied to the handpiece 22*a*.

The on/off state of FET 268 is set by a speed regulator 270. The output signal produced by speed regulator 270 is itself a function of signals received from an oscillator 272; and a slow speed detector 274. Speed regulator 270 further monitors the potential across the cells 252 to adjust pulse width as a function of cell potential.

Oscillator 272 produces a constant frequency output signal. The output signal produced by oscillator 272 is, however, forced to ground if a power down circuit 276 determines that the voltage across the cluster of cells 252 has fallen below a set potential. The slow speed detect circuit 274 produces a slow speed signal based on the detection of one of either two signals states. First, slow speed detector 274 produces a slow speed signal when the slow speed driver 266 produces a signal indicating current is being supplied to the handpiece 22*a* through low speed power conductor 62*a*. Secondly, slow speed detector 274 produces the slow speed signal when it determines that the potential across the cluster of cells 252 has fallen below a set potential.

FIGS. 17A and 17B, when assembled together, form a schematic drawing of the electrical components internal to the power pack 222. Cell charger 264 includes a voltage suppressor 282 that is tied across the opposed terminal of the DC power plug 248. Whenever the potential across the DC power plug 248 exceeds a preset voltage, voltage suppressor 282 establishes a closed circuit across the power plug 248 to prevent excessive voltages from being applied to the other components internal to the power pack 222. A full-wave bridge rectifier 284 is also tied across the terminals of the DC power plug 248. Rectifier 284 performs two functions. First, it allows an AC signal to be applied to the power pack 222 for recharging the cells 252. Secondly, in the event the polarities of the DC signal applied to power plug 248 are reversed, it ensures that the positive signal is still applied to the other components of the cell charger 248. A filter capacitor 286 is tied between the output terminal of rectifier 284 and ground to minimize voltage variations in

the signal, the rail voltage, distributed downline from the rectifier. In the illustrated version of the invention, the rail voltage is further filtered by a capacitor **287** also tied between the rectifier **284** and ground. In preferred versions of the invention, an 18 to 35 VDC signal or a 15 to 25 VAC signal is applied to cell charger **264** in order to charge cells **252**.

The rail voltage from rectifier **284** is applied to the V+ terminal of a charging chip **288** designed regulate the charging of cells **252**. One particular charging chip **288** that can be employed as part of this invention is the MAX713 manufactured by Maxim. The signal from rectifier **284** is applied to charging chip **288** through a resistor **290** and a forward biased LED **292**. The emission of light by LED **292** serves as an indication that a charging current is being applied to the power pack **222**. Not shown are the program pin Connections and voltage divider associated with charging chip **288** that are used to set the various signal transitions of the charging chip described hereinafter.

The actual current employed to charge cells **252** comes from rectifier **284** through a buck converter consisting of FET **294**, inductor **296** and diode **298**. The FET **294** and inductor **296** are series connected together and are connected to the cells **252** through a forward biased diode **302**. Diode **298** is a reverse biased catch diode that is connected between the junction of FET **294** and inductor **296** and ground. The signal that turns FET **294** on and off is based on a DRIVE (DRV) signal generated by charging chip **288**. The DRIVE signal is applied to a resistor **304** and from the resistor to the emitter of transistor **306**. The collector of transistor **306** receives the rail voltage from rectifier **284** through a resistor **308**. The base of

transistor 306 is tied to the cathode of diode 292 to receive the V+ signal. Collectively, resistors 304 and 308 and transistor 306 level shift the rail voltage to a set voltage below rail voltage. In some versions of the invention, this difference is approximately 10 VDC. The actual times at when the level-shifted voltage is present at the collector of transistor 306, is a function of the assertion of the DRIVE signal.

The signal present at the collector of transistor 306 is applied to the bases of two series-connected transistors 310 and 312 that act as current drivers. The collector of transistor 310 is tied to rectifier 284 to receive the rail voltage. The emitter of transistor 310 is tied to the emitter of transistor 312. The collector of transistor 312 is tied to ground. The current-boosted signal present at the junction of emitter-emitter junction of transistors 310 and 312 is applied to the gate of FET 294 through a resistor 314.

Charging chip 288 asserts the DRIVE signal to cause the cells 252 to be charged at either a slow, "trickle," rate or a fast rate. The rate at which the charging chip 288 allows the cells to be charged is a function of the potential across the cells, current flow through the cells and the period of time cell charger 264, operates in at the fast rate. Charging chip 288 has BAT+ and BAT+ terminals that are connected directly across the cells 252 through which the chip monitors the potential across the cells. A capacitor 307 is also tied across the cells 252. The negative terminal of the cells 252 is connected to ground through a resistor 316. Charging chip 288 has a ground terminal that is connected to ground at the point resistor 316 is connected to ground. Charging chip 288 thus measures current flow through cells 252 as a function

of the voltage between its BAT+ and ground terminals. The charging chip basis its charging of the cells **252** in part on this current flow measurement.

The charging chip **288** also asserts a FAST-CHARGE (FCHG) signal whenever it is charging the cells **252** at the trickle rate. The FAST-CHARGE signal is applied to the emitter of a transistor **320** through a resistor **322**. The collector of transistor **320** receives the rail voltage from rectifier **284** through a forward biased LED **324**. The base of transistor **320** is tied to the cathode of LED **292**.

When cells **252** integral with power pack **222** are initially charged, cell charging chip **288** trickle charges the cells. This is accomplished by cycling the DRIVE signal so that it is on a relatively small fraction of time. When the DRIVE signal is on, FET **294** is turned on to allow inductor **296** to charge. During this part of the charging cycle current flows to the cells **252** so as to charge the cells. During trickle rate charging, the DRIVE signal is cycled at a rate so that when FET **294** is turned off, inductor **296** fully discharges through diode **298**. Consequently, during subsequent cycles when FET **294** is on, less current flows through inductor **296** to the cells **252**. In one version of the invention, the current supplied to the cells during trickle rate charging is 0.062 Amps.

During trickle rate charging, the FAST-CHARGE signal is asserted high by charging chip **288**. Consequently there is no current flow through transistor **320** and LED **324**. The LED **324** thus does not emit light.

Charging chip 288 monitors the potential across the cells 252 to determine if it reaches a level at which the cells can accept a higher current charge without being damaged. In one particular version of the invention, for the cells 252 to be fast charged, they must each have a potential of 0.4 Volts. Once charging chip 288 determines this potential, 2.8 Volts for the seven cells, has been reached, the on cycle time for asserting the DRIVE signal is increased; the cell charger 264 enters the fast charge mode.

The increase in the on cycle time for the DRIVE signal causes a like increase in the total percent of time in each cycle FET 294 is turned on. Specifically, charging chip 288 asserts the DRIVE signal for sufficient periods of time so that FET 294 is turned on for sufficient periods of time to ensure that inductor 296 does not fully discharge. Thus, during the periods of time FET 294 is turned on, there is substantially higher current flow to the cells 252 than when the cell charger 264 is operated in the trickle mode. In one particular version of the invention, when cell charger 264 is operated in the fast charge mode, current flow to the cells 252 is approximately 0.5 Amps.

When the cell charger 264 is in the fast charge mode, charging chip 288 negates the FAST-CHARGE signal low. The negation of the FAST-CHARGE signal turns on transistor 320 which, in turn, causes current to flow through LED 324. The current flow through LED 324 serves to cause the LED to emit a light indicating that the power pack 222 is being fast charged.

Cell charger 264 stays in the fast charge mode until one of three events occur. One event is the sensing

by the charging chip 288 of a drop in the voltage across cells 252. This voltage drop is interpreted by the charging chip 288 that the cells 252 are fully charged a an evidenced by the drop in current out of the cells. Secondly, charging chip 264 monitors the cells 252 for the voltage across the cells. In some versions of the invention, if this voltage reaches 14 Volts, the cell charger 264 ceases fast mode charging of the cells 252. Thirdly, charging chip 288 monitors the time the cell charger 264 is in the fast charge mode. If the time significantly exceeds the total time expected to fully charge the cells 252, fast mode charging is terminated In one version of the invention, the time for fully charging the cells is approximately 180 minutes; in these versions of the invention charging chip 288 is programmed to terminate fast mode charging after approximately 264 minutes. Once fast mode charging is terminated, charging chip 288 continues to assert the DRIVE signal necessary to trickle mode charge the cells 252. The continual trickle mode charging of the cells 252 prevents the cells from losing their charge.

The charging/discharging circuit internal to power pack 222 also includes a voltage regulator 328. Voltage regulator 328 is connected to the positive terminal of the cluster of cells 252. The voltage regulator produces a constant level +5 VDC signal that is used as a reference voltage and an operating voltage by the other components internal to the power pack 222.

The slow speed driver 266 is connected to the positive terminal of the cluster of cells 252. Conductor 60*a*, the conductor over which the high speed drive signal is supplied to the handpiece 22*a*, is connected directly to the cells 252 through the slow speed driver

266. Conductor 62*a*, the conductor over which the low speed drive signal is supplied to the handpiece 22*a*, is connected to cells 252 through a forward biased diode 330. A resistor 332 is connected across the extension of conductor 60a internal to slow speed driver 266 and the cathode of diode 330.

Slow speed driver 266 also includes a transistor 334. The emitter of transistor 334 is tied to the anode of diode 330. The base of transistor 334 is tied to the cathode of diode 330 through a resistor 336. The collector of transistor 334 is tied to the slow speed detector 274 to provide a signal whenever current flow to the handpiece is through conductor 62*a*.

The slow speed detector 274 includes a comparator 338 that provides a specific signal to indicate if the low voltage drive signal is to be outputted by power pack 222. The signal present at the collector of transistor 334 is applied to the noninverting input of comparator 338 through a resistor 339. In the illustrated version of the invention, the signal from transistor 334 is offset by the signal present at the junction of two series-connected resistors 340 and 342 which are connected between the +5 VDC source and ground. It will further be noted that a capacitor 343 is tied across resistor 342. Capacitor 343 filters out transient noise in the signal present at the junction of resistors 339, 340 and 342. Other capacitors are likewise tied to certain of the other resistors tied to ground. Since the position and purpose of these capacitors are understandable, they will not be further illustrated or described to minimize the complexity of this description and the accompanying drawings.

The voltage across the cluster of cells **252** is applied to the inverting input of comparator **338**. More particularly, the voltage across the cells **252** is applied to comparator **338** through a resistor **344**. A resistor **346** is tied between the inverting input of comparator **338** and ground. A feedback resistor **348** is tied between the output of comparator **338** and the noninverting input to provide hysteresis damping of the transitions of the output signal from the comparator.

Oscillator **272** includes a comparator **352**. The oscillator **272** also includes a voltage divider consisting of series-connected resistors **354** and **356** that are connected between the +5 VDC source and ground. The voltage present at the junction of resistors **354** and **356** is applied to the noninverting input to the comparator **352**. The inverting input of comparator **352** is tied to ground through a capacitor **358**. A resistor **360** provides a feedback loop between the output of comparator **352** and its noninverting input. A resistor **362** provides a feedback look between the output of comparator **352** and is inverting input. Oscillator **272**, when energized, produces a triangle-wave output signal having a frequency between 1.0 K Hz and 2.0 K Hz and, more particularly, approximately 1.3 K Hz.

Power down circuit **276** employs a comparator **364** to monitor the voltage across cells **252**. The cell voltage is applied to the noninverting input of comparator **364** through a resistor **366**. A resistor **368** is tied between the noninverting input of the comparator **364** and ground to provide the appropriate level adjustment to the signal applied to the comparator. The signal from rectifier **284** is also applied to the noninverting input of comparator **364** through a forward biased diode **370** and a resistor **372**.

A reference voltage is applied to the inverting input of comparator 364. This voltage is the voltage present at the junction of series-connected resistors 374 and 376 which are connected between the +5 VDC source and ground.

A feedback resistor 378 is connected between the output of comparator 364 and its noninverting input. A diode 380 is connected between output of comparator 364 and the junction of oscillator comparator 352 and capacitor 358. Diode 380 is reverse biased relative to comparator 364.

Speed regulator 270 provides the signal that turns FET 268 on and off. The on/off signal to FET 268 is produced by a comparator 384. The input to the noninverting input of comparator 384 is the signal present at the junction of comparator 352, capacitor 358 and diode 380. One input to the inverting input of comparator 384 is the output signal from comparator 338 of the slow speed detector 274. The signal from comparator 338 is applied to comparator 384 through a resistor 386. A second input to comparator 384 is the voltage across the cells 252 which is applied to the comparator 384 through a resistor 388. The signal from resistor 388 is a compensation signal which compensates for the changes in the signal from the slow speed detector 274 as function of voltage changes across the cells 252.

The signal applied to the inverting in-put of comparator 384 is level adjusted by the signal present at the junction of series connected resistors 390 and 392. Resistors 390 and 392 form a voltage divider between the +5 VDC source and ground. A resistor 394 can be placed in parallel across resistor 392 by the closing of

a switch **396** tied between resistor **394** and ground. Resistor **394** and switch **396** allows the signal presented to comparator **384** to be adjusted to allow further control of the on-period of the pulse width modulated signal produced by the power pack **222**.

The output signal of comparator **384** is applied to the gate of FET **268** through a resistor **398**. A diode **400** is reverse biased between the conductors internal to power pack **222** that are connected to power conductor **60***a* and ground conductor **64***a*. A capacitor **402** is connected between the anode of diode **400** and ground.

When handpiece **22***a* is operated at high speed, current flows from cells **252** directly through the slow speed driver **266** to conductor **60***a*. Consequently there is no current flow through diode **330**. As a result, transistor **334** is turned off and the slow speed driver forwards a zero-voltage signal to the slow speed detector **274**. As long as the potential across the cells **252** remains above a select potential, the signal present at the inverting input of the comparator **338** of slow speed detector **274** will be greater than the signal present at the noninverting input. Comparator **338** thus outputs a zero-voltage signal to comparator **384** of the speed regulator **270**.

The output signal from oscillator **272** is the signal applied to the noninverting input of comparator **384**. During the periods when the oscillator output signal is above the signal present at the inverting input, comparator **384** generates a +5 VDC signal that turns on FET **268**. As discussed above, during fast operation of the handpiece **22***a*, speed regulator **270** presents a zero-voltage signal to the noninverting input

of comparator 384. Thus, when the irrigator 220 is in this state, comparator 384 asserts a switch signal to turn FET 268 on for relatively long periods of time. For example, in one version of the invention, FET 268 has an on duty cycle of approximately 85% of each period of the output signal generated by the oscillator 272. This ensures that a relatively high average voltage is presented to the motor 34 as the high speed drive signal.

When the irrigator 220 is operated at slow speed, current flow to the handpiece 22*a* from cells 252 through diode 330 and conductor 62*a*. The current flow through diode 330 turns transistor 334 on. The turning on of transistor 334 presents a positive voltage to the noninverting input of comparator 338 of slow speed detector 274. The voltage from transistor 334, when combined with the voltage across resistor 342, is greater than the voltage present at the inverting input of comparator 338. Thus comparator 338 will assert a slow speed signal, a +5 VDC signal, to the inverting input of comparator 384.

The rise in the voltage presented to the inverting input of comparator 384 reduces the percent of time the voltage at that inverting input is greater than the output signal of oscillator 272 presented to the noninverting input. Thus, the percent of time comparator 384 asserts the drive signal to turn on FET 268 is reduced. In some preferred versions of the invention, the on duty cycle of FET 268, falls to approximately 70% of the period of the output signal from the oscillator 272. The increased off time of FET 268 causes power pack 222 to present a relatively low voltage signal, the low speed drive signal, to the handpiece 22*a*. The potential of the drive signal actually pre-

sented to the motor **34** will, of course, be function of the position of spring **66** relative to resistor **68**.

It should also be understood that speed regulator **270** also adjusts the on duty cycle of FET **268** as a function of the voltage across cells **252**. As the voltage across the cells **252** drops owing to their discharge, the signal presented to the inverting input of comparator **384** through compensation resistor **388** drops. The drop in the level of this signal serves to cause the duty cycle with which the comparator asserts a positive-voltage signal to increase. Thus, as the potential across the cells **252** drops, the on duty cycle of FET **268** increases to ensure that a drive signal with a substantially constant voltage is presented to the handpiece **22***a* as long as the potential across the cells stays above a given minimum level.

Slow speed detector **274** also asserts the slow speed signal to speed regulator **270** whenever the voltage across the cells **252** drops below a select potential. More particularly, as result of the voltage drop across the cells **252**, the signal presented to the inverting input of comparator **338**, will drop. If the signal at this inverting input falls sufficiently, it will be below the signal present at the noninverting input. If this drop in relative signal strength occurs, comparator **338** will assert the slow speed signal even though the irrigator is set for fast speed operation. Should this occur, the low speed drive signal will be presented to the handpiece **22***a* through conductor **60***a*. In one preferred version of the invention, the components forming the slow speed detector **274** are selected to cause the detector to assert the slow speed command signal when the potential across the cells falls below 7.4 VDC.

The power down circuit 276 inhibits operation of the power pack 222 when the potential across the cells 252 drops to a level below which further discharge might cause damage to the cells. More particularly, as long as the voltage across the cells 252 remains above a select level, the signal present at the noninverting input of comparator 364 will be above the voltage of the signal present at the inverting input. Comparator 364 will thus output a signal that will prevent forward biased current flow through diode 380. In some preferred versions of the invention, comparator will assert an output signal as long as the voltage across the cells 252 remains above approximately 6.0 VDC.

If, however, the voltage across cells 252 falls below the set value, the signal present at the noninverting input of comparator 364 will be less than the signal present at the inverting input. The output of comparator 364 will go to ground. Consequently, current will flow through diode 380 and a ground signal will thus be presented to the noninverting input of comparator 384 of speed regulator 270. Since the signal present at the inverting input of comparator 384 is a positive-voltage signal, the output of comparator 384 will likewise be at ground and hold FET 268 in the off state. The turning off of FET 268 prevents current flow from the power pack 222 to the handpiece 22*a*.

When the power pack 222 is placed back in its charger, the signal from rectifier 284 is applied to the noninverting input of comparator 364 through diode 370 and resistor 372. The signal from the rectifier 284 will be of sufficient potential to overcome the positive feedback that is supplied to the noninverting input through resistor 378. Thus, the signal from the recti-

fier 284 causes comparator 364 to again assert a positive-voltage signal.

Irrigator 220 has the same basic advantages as previously described irrigator 22. Irrigator 220 further includes a power pack 222 that can be used to energize the handpiece 22*a*. In some situations it may be more economical to provide this power pack 222 than a use-once battery pack.

Moreover, owing to the separation of power cable 224 from supply tube 28*a*, power pack 222 may be held outside of the sterile field in which the other comporents of the irrigator 220 are used. Thus, the power pack 222 need not be subjected to the sterilization practices used to sterilize medical instruments placed in the sterile field. This further serves to reduce the costs of supplying an energization current to the handpiece 22*a* of irrigator 220 of this invention.

The power pack 222 itself is especially designed to facilitate its repetitive use. The circuitry internal to the power pack 222 ensures that, even when the handpieces 22*a* with which it is used are operated at low speed, the cells 252 are evenly discharged. Consequently, the individual cells 252 do not develop separate internal electro-chemical "memories" regarding the magnitude of the charges they store. This ensures that when the power pack 222 is recharged, all the cells 252 will recharge to the greatest extent possible. The full recharging of the cells 252 ensures the power pack 222 will, even after numerous rechargings, be able to deliver the potential required to operate the handpiece 22*a* at high speed.

Also, the power pack **222** is configured so that when the charge falls, the width of the drive signal increases. Thus, the potential of the drive signal applied to the handpiece remains constant even though the voltage across the cells may be dropping. Since this potential does not vary for, a given trigger setting the discharge of fluid from the handpiece **22***a* remains constant for a given trigger setting even as the potential across the cells **252** falls. The person using the irrigator **220** of this invention thus is not required to engage in real time adjustment of the trigger setting as a result of the discharge of the cells.

Moreover, once the potential across the cells **252** falls below a first level, slow speed detector **274** causes the power pack to produce low voltage drive signals to the handpiece **22***a*. This accomplishes two tasks. First. it conserves the charge stored in the power pack **222** to increase the period of time with which it can be used. Secondly, by preventing fast speed operation of the irrigator **220**, it provides an indication to medical personnel that the power pack **222** will soon be discharged to the point where it can no longer supply an energization voltage to the handpiece **22***a*.

The power down circuit **276**, as discussed above, prevents operation of the power pack when such operation could potentially cause damage to cells **252**. Moreover, often after NiCad cells are discharged, the potential across the cells increases. Power down circuit **276** prevents reactivation of the power pack **222** when the cells **252** are in this state. Thus, power down circuit **276**, inhibits the use the power pack **222** even though the real-time potential across the cells **252** provides an impression that they are storing enough

charge to energize a handpiece 22*a* for a significant period of time.

FIGS. 18 and 19 illustrate an alternative nozzle assembly 410 that can be fitted to the front end of discharge tube 32 of the tip assembly 30 of this invention. Nozzle assembly 410 includes a cylindrical base 412 that is secured over the open end of discharge tube 32. Base 412 has a front face 414 that is formed with a number of openings 416 through which the irrigating fluid is discharged. A post 418 extends forward from the center of face 414.

A rotating spray head 420 is secured to post 418. The spray head has a body formed out of a number of spaced apart shoulder sections 422. In preferred versions of the invention, the number of shoulder sections 422 equals the number of openings 416 formed in the base 412 of the nozzle assembly 410. The shoulder sections 422 are formed to have bottom surfaces 423 that extend diagonally outwardly from the center of the spray head 420. A nose 424 extends forward from the center of base where the shoulder sections 422 meet. In the illustrated version of the invention, nose 424 is formed with a slight outwardly projecting taper to facilitate the manual grasping and rotation of the spray head 420. The surface of the nose 424, however, does not subtend the spaces between the shoulder sections 422 through which the fluid stream flows.

Spray head 420 is formed with an axially extending bore 426 to facilitate the fitting of the spray head over post 418. The post 418 is formed with its own locking head 428, that is larger in diameter than the post itself, to hold the spray head 420 to the base 412. Nose 424 of the spray head 420 is formed with a counter-

bore **430** in which the locking head **428** of the post is seated. Typically, the spray head **420** is snap secured over post **418**. While not illustrated, in some preferred version of the invention, locking head **428** and the portion of nose **424** that defines counterbore **430** are formed with interlocking teeth for holding the spray head in a specific position on the post **418**.

A tip assembly **30** in which nozzle assembly **410** is installed is used like a standard tip assembly. When the medical personnel want a direct discharge of irrigating fluid onto a body site, spray head **420** is set on post **418** so that the interstitial spaces between the shoulder sections **422** are aligned with openings **416**. When spray head **420** is so positioned, the irrigation fluid will be directly discharged onto the body site at which the tip assembly **30** is directed.

When diffused spray is desired, spray head **420** is reset so that shoulder sections **422** are aligned with openings **416**. The fluid discharged through the openings thus strikes the base surfaces **423** of the shoulder sections and is diverted radially outwardly toward the surface of the splash shield **181** that define discharge chamber **210** (FIG. **10A**.) The fluid is reflected off the splash shield **181** and flows towards the body site.

Tip assembly **30** with nozzle assembly **410** provides either a direct or diffused spray of irrigating fluid. This allows real time adjustment of the spray pattern without requiring medical personnel to change tip assemblies. Still another advantage of this version of tip assembly **30** is that since the tip assembly can be used to deliver irrigating fluid in two spray patterns, the need to keep two separate tip assemblies, that only differ by nozzle design, is eliminated.

Also, nozzle assembly **410** of this invention diffuses the discharged irrigation fluid after the fluid has already been discharged from the discharge tube **32**. It does not impose a restriction on fluid flow while the irrigating fluid is in the discharge tube **32**. Thus, nozzle assembly **410** of this invention, when employed to diffuse fluid flow, does not impose a pressure drop on the fluid as it is discharged which can adversely effect the efficiency of the pump **24**

The foregoing description has been directed to several preferred embodiments of the invention. It should be clear that the structure of the invention may differ from what has been described. For example, there is no requirement that all versions of the invention employ the described tip lock;. Other versions of the invention may employ other tip locks and even other tip assemblies. Also, there is no requirement that handpiece **22** be manufactured out of two opposed shells. In some versions of the invention, the handpiece may consist of a single piece housing that is formed with a channel in which the drain tube **50** is fitted. In these, as well as other versions of the invention, it may be desirable to employ other means to secure the drain tube in the housing. For example, it may be desirable to employ an adhesive to bond the drain tube to a wall internal to the housing that forms the channel in which the drain tube is seated.

It should likewise be understood that not all versions of the handpiece of this invention may include pumps and complementary motors for providing the discharge force for the fluid pulses. In some versions of the invention, the fluid may actually be pumped from a pump that is separate from the handpiece. In these versions of the invention, supply tube **28** or

some conduit connected to supply tube 28 may be connected directly to the discharge head of the handpiece.

Furthermore, in versions of the invention in which the on/off and speed control is employed, the trigger structure may be different from what has been described. In some versions of the invention, the trigger may be a press-button that is normally biased to hold the complementary wiper in the off state. Alternatively, the trigger may be a component that is integrally formed with the body handpiece. In these versions of the invention, the trigger may be a cantilever arm that is integrally molded as part of the body of the handpiece. This arm would be connected to the wiper so that movement of the arm would result in displacement of the wiper. In these versions of the invention, owing to the molding of the cantilever arm, when the arm is its normal, static state it would hold the wiper in off position. The application of manual force to deflect the arm would move the wiper to position in which the wiper would electrically connect the motor to the batteries or power pack.

Also, the tip assembly may be structurally different from what has been described. For instance, in some version of the invention, discharge tube 32 may be provided with an outwardly extending ring that forms a seal with the splash shield 181 and suction tube 48 is formed with an annular groove in which a complementary seal integral with the splash shield seats. It should further be recognized that some tip assemblies may not even have suction tubes. Alternative nozzles may also be provided. For example, the nozzle may be integrally formed with the discharge tube. Also, while the necks of the discharge tube and

suction tube are shown as being separated from the bodies of these tube by distinct steps, that need not always be the case.

Moreover, in some versions of the invention, it may be desirable to mount a slidable splash shield to the tip assembly. Typically, but not always, these tip assemblies do will not include a suction tube. In these versions of the invention, the splash shield will move along the length of the discharge tube. An O-ring may be mounted in the portion of the splash shield seated around the discharge tube to prevent back leakage of irrigating fluid.

Also, it may be desirable to provide some sort of locking mechanism to hold the splash shield to the rest of the tip assembly. For example, the opposed surfaces of the splash shield **181** that form slit **183** can be provided with a complementary boss-in-bore that form a snap lock. Also, the channels **215** may not be required. In the place of the channels, small bores may be formed in the portion of the spray shield **181** that define discharge chamber **210**. Furthermore different constructions of the adjustable nozzle are possible. In some nozzles constructed according to this invention, it may be possible to set the rotating spray head to an intermediate position in which it deflects only a fraction of the fluid stream discharged out of the fixed base of the nozzle.

Also, while one particular trigger assembly for regulating the potential of the drive signal applied to the motor **34** has been disclosed, it should be clear that others may be employed. Thus, in some versions of the invention, resistor **68** may be eliminated. In these versions of the invention, the number of differ-

ent speeds at which the irrigator would operate would be a function of the number of separate power conductors tied from the battery pack or rechargeable power pack to the handpiece. If, for example, there were three power conductors, than the irrigator would only operate at three speeds. In the power pack employed with these versions of the invention, the necessary modifications would have to be made to its internal regulator to determine through which of the three conductors there was current flow. It would similarly be necessary to design the speed regulator to ensure that it could cause three different PWM drive signals to be produced.

Alternative constructions of the trigger assembly are also possible. The loop in the spring **66** may not always be necessary to define a pivot point for the spring. Still in other versions of the invention, other members may be employed as the wiper that provides contact at various positions along resistor **68** and with contact **70**. In most versions of the invention, it is contemplated that the wiper be formed of material that, in addition to being conductive, is also flexible.

Also, some trigger locks may be designed to hold the trigger in intermediate positions in addition to the position required for high speed operation.

It should similarly be recognized that the power pack may employ alternative circuitry for charging cells **252**. For example, it may desirable to build an alternative power pack with a plug that allows it to be coupled to a conventional 120 VAC wall outlet. In these versions of the invention, the power pack may then incorporate a step-down transformer to lower the AC signal to a level at which it can be rectified.

Likewise, alternative circuitry for ensuring that the cells **252** are uniformly discharged and/or are not excessively discharged may be employed. For example, in some versions of the invention it may be desirable to provide a number of different voltage regulators to the power conductors for providing drive signals of different potentials. Alternatively, the power conductors may be connected to a switchable voltage regulator. In this version of the invention, the voltage produced by the regulator would be based on the determination of which power conductor was serving as the conduit over which the drive signal was being applied to the handpiece **22***a*. Alternatively, zener diodes may be used to set the voltage of the drive signal applied to the handpiece **22***a* from the power pack **222**.

Therefore, it is the object of the appended claims to cover all such modifications and variations as come within the true spirit and scope of the invention.

The embodiments of the invention in which an exclusive property or privilege is claimed are defined as follows:

1. A medical irrigator comprising:

a handpiece, said handpiece having: a body having a front end; a discharge head in the body that is directed toward the front end of the body through which fluid is discharged;

and a drain tube mounted in said body so as to have an open end adjacent the front end of said body; and

a tip assembly for connection to said handpiece, said tip assembly including: a discharge tube having a first neck that is seated in said discharge head; and a suction tube that is attached to said DRAIN tube, said suction tube having a second neck that is seated in said open end of said drain tube.

2. The irrigator of claim 1, wherein said drain tube is a single-piece tube having a first section mounted in said body of said handpiece and a second section that extends beyond said handpiece for connection to an external suction unit.

3. The irrigator of claim 1, further including a pump disposed in said handpiece wherein said pump forces fluid through said discharge head and said discharge tube.

4. An irrigating handpiece for use with a discharge tube, said irrigating handpiece comprising:

a body shaped to have a handgrip and a front end spaced from said handgrip, said front end formed with an opening for receiving the discharge tube;

an open-ended discharge head in said body from which irrigation fluid is discharged, said discharge head being located adjacent the front end of said body and being dimensioned to receive the discharge tube; and

a tip lock seated in said front end of said front end of said body, said tip lock having: a face plate located forward of said discharge head, said face

plate being positioned so that the discharge tube extends across said face plate; and a flexible biasing member extending between said face plate and said body for holding said face plate in a static position relative to said discharge tube so that when said face plate is so positioned, said face plate engages a complementary surface of the discharge tube.

5. The irrigation handpiece of claim 4, wherein said face plate and said biasing member of said tip lock are integrally formed as a single unit.

6. The irrigation handpiece of claim 5, wherein said biasing member is a spring arm.

7. The irrigation handpiece of claim 4, further including a drain tube seated in said body that extends from said front end for receiving a suction tube.

8. The irrigating handpiece of claim 4, further including a pump disposed in said body wherein said discharge head is part of said pump and said pump forces irrigation fluid through said discharge head.

9. An irrigating handpiece for receiving a tip assembly having a discharge tube and a suction tube, said irrigating handpiece comprising:

a body shaped to have a handgrip, a front end spaced from said handgrip, and a channel that extends from said front end towards said handgrip;

a discharge head fitted in said body, said discharge head having an opening to which the discharge

tube is coupled and through which fluid is discharged into the discharge tube; and

a single-piece drain tube, said drain tube having a fist section that is disposed in said channel and that has an open end adjacent said front end of said body for receiving the suction tube and second section integral with said first section that extends out from said body.

10. The irrigating handpiece of claim 9, wherein: said channel is contained within an opening formed in an outer surface of said body so that said first section of said drain tube is at least partially visible from outside of said body; and said drain tube is formed from transparent tubing.

11. The irrigating handpiece of claim 9, wherein said body is formed from two shell sections and said first section of said drain tube is disposed between said shell sections.

12. The irrigating handpiece of claim 9, wherein said channel extends at least partially through said handgrip of said body.

13. The irrigating handpiece of claim 9, further including a tip lock movably secured to said front end of said body for removably securing the tip assembly to said handpiece.

14. A tip assembly for use with an irrigating handpiece, said tip assembly including:

an elongated discharge tube having a circular outer surface with an outer diameter, a front end, and a rear end opposite said front end;

a first neck integrally formed with said rear end so as to extend rearwardly therefrom;

an annular seal disposed over an outer surface of said first neck; and

a tab integrally formed with said discharge tube that extends away from said outer surface of said discharge tube, said tab being located adjacent said rear end of said discharge tube.

15. The tip assembly of claim 14, further including a suction tube that is connected to said discharge tube by at least one web and that has a front end adjacent said front end of said discharge tube and a rear end adjacent said rear end of said discharge tube.

16. The tip assembly of claims 14, further including a spray shield that is removably secured over said first end of said discharge tube and said first end of said suction tube.

17. The tip assembly of claim 15, wherein said suction tube has an outer surface having a diameter, an inner wall having a diameter and a second neck that extends rearwardly from said rear end of said suction tube, said second neck having an outer surface with a diameter less than said diameter of said outer surface of said suction tube and an inner wall with a diameter equal to the diameter of the inner wall of said suction tube.

18. The irrigator of claim 1, further including a lock assembly integral with said handpiece for releasably holding said tip assembly to said handpiece.

19. The irrigator of claim 1, wherein said second neck has an outer surface and said drain tube and said suction tube are collectively dimensioned so that the outer surface of said second neck abuts an adjacent inner surface of said drain tube.

20. The irrigator of claim 19, wherein the outer surface of the second neck of said suction tube has a tapered profile such that outer surface has small diameter adjacent an open rear end of said suction tube and an increasing diameter distal from the open rear end.

21. The irrigator of claim 20, wherein said suction tube has a main portion located forward of said second neck and said suction tube is shaped to have et constant inner diameter from the open end of said suction tube, through said second neck and through at least a section of said main portion adjacent said second neck.

22. The irrigator of claim 1, further including a supply tube that is connected to said handpiece and that is in fluid communication with said discharge head through which the fluid is supplied to said discharge head.

23. A medical irrigator comprising:

a handpiece, said handpiece including: a body having a front end; a discharge head through which irrigation fluid flows, said discharge head having an opening adjacent the front end of the body through which the irrigation fluid is discharged; and a drain tube mounted in said body through which a suction is drawn, the drain tube

having an open front end located adjacent the opening of said discharge head; and

a tip assembly, said tip assembly having: a discharge tube with an open rear end, the rear end of said discharge tube being seated in the opening of said discharge head so that irrigation fluid flows directly from the discharge head into the discharge tube; and a suction tube, said suction tube having an open rear end with a circumferentially extending outer surface, the rear end of said suction tube being seated in the front end of said drain tube and, said drain tube and said suction tube being collectively dimensioned so that the outer surface of the rear end of said suction tube abuts an adjacent inner surface of the front end of said drain tube.

24. The irrigator of claim 23, further including a lock assembly integral with said handpiece for releasably holding said tip assembly to said handpiece.

25. The irrigator of claim 23, wherein said drain tube is a single-piece tube having a first section mounted in said handpiece body and a second section that extends out of said handpiece body for connection to an external suction unit.

26. The irrigator of claim 23, wherein said tip assembly suction tube is formed to have a main body and a neck, said neck forms the rear end of said suction tube, said main body and said neck each have an outer diameter and an inner diameter and wherein the outer diameter of said neck is less than the outer diameter of said main body and the inner diameter of

said neck and the inner diameter of a section of said main body adjacent said neck are identical.

27. The irrigator of claim 26, wherein the outer surface of the rear end of said suction tube has a tapered profile such that the outer diameter of the rear end of said suction tube increases distally from the opening in the rear end.

28. The irrigator of claim 23, wherein: said suction tube is formed so as to have a main portion contiguous with the rear end; the rear end and said main portion of said suction tube each have an inner diameter; and the rear end and an adjacent section of the main portion of said suction tube have a constant inner diameter.

29. The irrigator of claim 23, further including a supply tube that is connected to said handpiece and that in fluid communication with said discharge head through which the irrigation fluid is supplied to said discharge head.

30. The irrigator of claim 23, further including a pump disposed in said handpiece wherein, said pump forces the irrigation fluid through said discharge head and said discharge tube.

31. The irrigating handpiece of claim 4, wherein said face plate is formed with an opening through which the drain tube extends and an edge surface of said face plate that defines the opening selectively engages the complementary surface of the drain tube.

32. The irrigating handpiece of claim 31, wherein said face plate is formed so that the opening in said

face plate is circumferentially enclosed by said face plate.

33. The irrigator of claim 4, further including a supply tube that is connected to said handpiece and that is in fluid communication with said discharge head through which the irrigation fluid is supplied to said discharge head.

34. An irrigating handpiece for use with a discharge tube, said irrigating handpiece including:

a body, said body having a first end, the first end being formed with an opening in which the discharge tube is inserted;

a discharge head located in said body, said discharge head having an open end in said body adjacent the first end in which the discharge tube is received and through which irrigation fluid is discharged into the discharge tube; and

a tip lock mounted to said body, said tip lock including:

a lock plate having an engagement surface, said lock plate being movably mounted to the first end of said body so as to have a first position in which the engagement surface engages a complementary surface of the discharge tube to prevent release of the discharge tube and a second position in which the engagement surface is spaced from the discharge tube to allow release of the discharge tube;

a biasing member extending between said body and said lock plate for holding said lock plate in the fist position; and

a manually displaceable release button connected to said lock plate, said release button being connected to said lock plate so that displacement of said release button results in displacement of said lock plate from the first position to the second position.

35. The irrigating handpiece of claim 34, wherein said lock plate, said biasing member and said release button of said tip assembly are formed as a one-piece component.

36. The irrigating handpiece of claim 34, wherein said lock plate is shaped to define an opening through which the discharge tube is inserted and the engagement surface of said lock plate at least partially defines the opening.

37. The irrigating handpiece of claim 36, wherein said lock plate is formed so that the opening through which the discharge tube is inserted is circumferentially surrounded by said lock plate.

38. The irrigation handpiece of claim 34, wherein said lock plate is shaped so that a surface opposite the engagement surface has a beveled profile.

39. The irrigating handpiece of claim 34, wherein said release button is a plate that is integrally formed with said lock plate.

40. The irrigating handpiece of claim 34, further including a drain tube mounted in said body for receiving a suction tube.

41. The irrigating handpiece of claim 34, further including a supply tube that is connected to said handpiece and that is in fluid communication with said discharge head through which the irrigation fluid is supplied to said discharge head.

42. The irrigating handpiece of claim 34, further including a pump disposed in said handpiece wherein, said pump forces the irrigation fluid through said discharge head and said discharge tube.

43. The irrigating handpiece of claim 9, further including a supply tube that is connected to said body and that is in fluid communication with said discharge head through which the fluid is supplied to said discharge head.

44. The irrigating handpiece of claim 9, further including a pump disposed in said body wherein, said pump forces the fluid through said discharge head and said discharge tube.

45. An irrigating handpiece for receiving a tip assembly having a discharge tube and a suction tube, said irrigating handpiece including:

a body at least partially shaped to form a handgrip and a front end for receiving the discharge tube and the suction tube;

a lock assembly mounted to the front end of said body for releasably securing the discharge tube and the suction tube to said body;

a discharge head disposed in said body, said discharge head having an open end adjacent the front end of the body for receiving the discharge tube wherein, said discharge head receives irrigation fluid and discharges the irrigation fluid through the open end into the discharge tube; and

a single piece drain tube, said drain tube having a first end mounted in said body and a second end integral with the first end that extends outside of and away from said body, the first end of said drain tube being adjacent the front end of said body and being in fluid communication with the suction tube.

46. The irrigating handpiece of claim 45, wherein the first end of said single drain tube is positioned adjacent the front end of said body and has an opening for receiving the suction tube.

47. The irrigating handpiece of claim 45, wherein: said body is formed to define a channel; and the first end of said drain tube is fitted in the channel.

48. The irrigating handpiece of claim 45, wherein: said body is formed with an elongated opening; the first end of said drain tube is fitted in said body to be visible through the elongated opening; and said drain tube is formed from transparent tubing.

49. The irrigating handpiece of claim 48, wherein the elongated opening and said drain tube extend at least partially through the handgrip of said body.

50. The irrigating handpiece of claim 45, wherein said drain tube extends at least partially through the handgrip of said body.

51. The irrigating handpiece of claim 45, further including a supply tube that is connected to said handpiece and that is in fluid communication with said discharge head through which the irrigation fluid is supplied to said discharge head.

52. The irrigating handpiece of claim 45, further including a pump disposed in said handpiece wherein, said pump forces the irrigation fluid through said discharge head and said discharge tube.

53. The irrigating handpiece of claim 14, wherein said tab is formed to have a tapered surface that faces towards the rear end of the discharge tube that extends away from the outer surface of the discharge tube towards the front end of the discharge tube and a stepped surface that faces towards the front end of the discharge tube that extends perpendicularly away from the adjacent outer surface of the discharge tube.

54. A tip assembly for use with an irrigating handpiece, said tip assembly including:

an elongated discharge tube having a front end, and a rear end opposite said front end;

a first neck integrally formed with the rear end of said discharge tube so as to extend rearwardly therefrom;

an elongated suction tube secured to said discharge tube, said suction tube having a front end adjacent the front end of said discharge tube and a

rear end adjacent the rear end of said discharge tube, wherein the rear end of the suction tube has inner and outer diameters; and

a second neck integrally formed with the rear end of said suction tube so as to extend rearwardly therefrom, said second neck having a tapered profile so as to have an outer diameter that decreases rearwardly from the rear end of said suction tube and an open end wherein, said second neck has an inner diameter and the inner diameter of the rear end of said suction tube and of the inner diameter of said second neck are identical.

* * * * *

The United States of America

**The Director of the United States Patent and Trademark Office**

*Has received an application for a patent for a new and useful invention. The title and description of the invention are enclosed. The requirements of law have been complied with, and it has been determined that a patent on the invention shall be granted under the law.*

*Therefore, this*

**United States Patent**

*Grants to the person(s) having title to this patent the right to exclude others from making, using, offering for sale, or selling the invention throughout the United States of America or importing the invention into the United States of America for the term set forth below, subject to the payment of maintenance fees as provided by law.*

*If this application was filed prior to June 8, 1995, the term of this patent is the longer of seventeen years from the date of grant of this patent or twenty years from the earliest effective U.S. filing date of the application, subject to any statutory extension.*

*If this application was filed on or after June 8, 1995, the term of this patent is twenty years from the U.S. filing date, subject to any statutory extension. If the application contains a specific reference to an earlier filed application or applications under 35 U.S.C. 120, 121 or 365(c), the term of the patent is twenty years from the date on which the earliest application was filed, subject to any statutory extensions.*

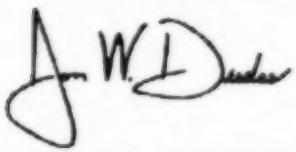

Director of the United States Patent and Trademark Office

**NOTICE**

*If the application for this patent was filed on or after December 12, 1980, maintenance fees are due three years and six months, seven years and six months, and eleven years and six months after the date of this grant, or within a grace period of six months thereafter upon payment of a surcharge as provided by law. The amount, number of timing of the maintenance fees required may be changed by law or regulation. Unless payment of the applicable maintenance fee is received in the United States Patent and Trademark Office on or before the date the fee is due or within a grace period of six months thereafter, the patent will expire as of the end of such grace period.*

US007144383B2

(12) **United States Patent**
**Arnett et al.**

(10) **Patent No.: US 7,144,383 B2**
(45) **Date of Patent: *Dec. 5, 2006**

(54) **SURGICAL/MEDICAL IRRIGATING HANDPIECE WITH VARIABLE SPEED PUMP, INTEGRATED SUCTION AND BATTERY PACK**

(75) Inventors: **Jeffrey D. Arnett**, Kalamazoo, MI (US); **Nicholas V Gately**, Portage, MI (US); **David H. Grafke**, Battle Creek, MI (US); **Ruth A. Hilchen**, Saline, MI (US); **James L. Reeffe**, Kalamazoo, MI (US)

(73) Assignee: **Stryker Corporation**, Kalamazoo, MI (US)

(*) Notice: Subject to any disclaimer, the term of this patent is extended or adjusted under 35 U.S.C. 154(b) by 0 days.

This patent is subject to a terminal disclaimer.

(21) Appl. No.: [illegible]

(22) Filed: May 4, 2004

(65) **Prior Publication Data**

US 2004/0210186 A1 Oct. 21, 2004

**Related U.S. Application Data**

(63) Continuation of application No. 09/480,705, filed on Dec. 14, 1999, now Pat. No. 6,746,419, which is a continuation of application No. 09/009,657, filed on Jan. 20, 1998, now Pat. No. 6,022,329, which is a continuation of application No. 08/539,133, filed on Nov. 17, 1995, now Pat. No. 5,718,668, which is a continuation of application No. 08/049,144, filed on Apr. 19, 1993, now Pat. No. 5,470,305.

(51) Int. Cl.
*A61M 3/00* (2006.01)
*A61M 3/02* (2006.01)

(52) U.S. Cl. ..... 604/39; 604/153; 604/246; 604/902; 601/155; 601/161

(58) Field of Classification Search ..... 601/155, 601/154, 160-165, 604/153, 246, 631, 902, 604/19, 28, 38-35, 119, 239/93, 330, 539, 239/263.1, 526

See application file for complete search history

(56) **References Cited**

U.S. PATENT DOCUMENTS

| | | | |
|---|---|---|---|
| 500,229 | A | 11/1893 | Gustafson |
| 802,686 | A | 4/1908 | Schroeder |
| 738,563 | A | 9/1903 | Wiener |
| 798,353 | A | 9/1905 | Pedrogan |
| 1,317,851 | A | 10/1919 | Arnett |
| 1,503,279 | A | 3/1924 | Nixon |
| 1,558,007 | A | 9/1925 | Schaffer |
| 1,846,596 | A | 2/1932 | Hartzberg |

(Continued)

FOREIGN PATENT DOCUMENTS

(16) 24 16 899 6/1975

(Continued)

OTHER PUBLICATIONS

Copy of Bibiana, Photo/Valley Lab and Best/Gravel photos (10 photos) Jan. 23, 1993.

(Continued)

*Primary Examiner*—Denton DeMille

(57) **ABSTRACT**

A medical/surgical irrigating handpiece with both a discharge line through which fluid is applied to the site and a suction line through which the discharge fluid is drawn away. The handpiece has a variable speed pulse pump. A simple, variable-speed motor actuates the pump to regulate the pumping rate. Power to actuate the motor comes from a battery pack that resides to the handpiece. A control mechanism attached to the handpiece regulates the energization signal applied to the motor so as to regulate motor speed.

46 Claims, 17 Drawing Sheets

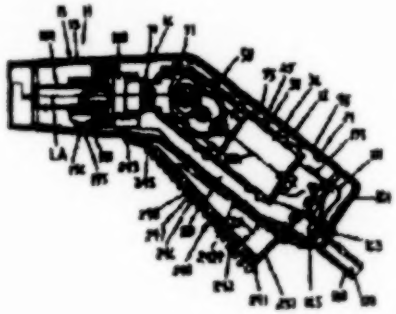

U.S. PATENT DOCUMENTS

3,812,886 A 5/1935 Lowry
2,112,829 A 3/1938 Lloyd
2,139,653 A 12/1938 Rutlidge
2,197,995 A 4/1940 Crowley
2,243,385 A 5/1941 Page
2,243,299 A 5/1941 Brown
2,494,888 A 1/1950 Daley
2,551,791 A 11/1950 Selsh
2,595,491 A 5/1952 Schweitzer
2,634,885 A 4/1953 Nash
2,662,495 A 12/1953 Riley
2,684,049 A 3/1954 Hollis
2,727,676 A 12/1955 Henderson
2,733,713 A 2/1956 Kalnick
2,781,154 A 2/1957 Meredith
2,882,496 A 8/1959 Thomas
2,847,007 A 8/1958 Poe
2,874,696 A 2/1959 Broad
2,988,771 A 10/1959 Hanna
2,993,854 A 7/1961 Hanna
3,001,208 A 9/1961 Freedman
3,014,624 A 12/1961 Hess et al
3,079,272 A 6/1963 Fitch
3,044,465 A 7/1962 Anderson et al.
3,048,171 A 8/1962 Sheesley
3,065,549 A 11/1962 Brun
3,070,880 A 12/1962 Tack
3,139,258 A 6/1964 Peters
3,208,145 A 9/1965 Turner
3,227,198 A 1/1966 Mastrogiy
3,237,304 A 3/1966 Brun
3,261,618 A 8/1966 Carpenter
3,295,371 A 1/1967 Smith
3,316,849 A 5/1967 Schumann
3,371,537 A 11/1967 Knox et al
3,379,039 A 12/1967 Johnson et al
3,393,673 A 7/1968 Mastrogiy
3,436,967 A 12/1968 VonDerhd et al.
3,473,410 A 2/1969 Claremch
3,474,343 A 2/1969 Chemen et al
3,448,784 A 6/1969 Schmitt
3,452,748 A 7/1969 Bradshaw
3,484,121 A 12/1969 Quinton
3,508,546 A 4/1970 Rogers et al
3,513,190 A 6/1970 Taylor
3,561,433 A 2/1971 Kovach
3,601,164 A 8/1971 Brun
3,605,596 A 9/1971 Robinson
3,615,687 A 1/1972 Gitto
3,653,377 A 6/1972 Rebold
3,702,141 A 11/1972 Weissbrun
3,703,170 A * 11/1972 Richman, Jr. ..... 601/162
3,713,533 A 1/1973 Reimuth
3,731,611 A 5/1973 Barber et al.
3,731,676 A 5/1973 Rebold
3,749,090 A 7/1973 Stewart
3,762,411 A 10/1973 Lloyd et al.
3,765,882 A 10/1973 Lallemand et al.
3,768,472 A 10/1973 Rudnick et al.
3,771,522 A 11/1973 Wagnild et al
3,784,795 A 1/1974 Kessler et al.
3,794,831 A 2/1974 Illman
3,833,349 A 12/1974 Resnick
3,861,385 A 1/1975 Kovach
3,883,874 A 5/1975 Lambert
3,889,675 A 6/1975 Stewart
3,895,741 A 7/1975 Magnel
3,949,753 A 4/1976 Dunbleton
3,965,914 A 6/1976 Rosenberg
3,982,540 A 9/1976 Ross
3,996,266 A 10/1976 Vollweiler
3,983,874 A 11/1976 Newman
4,080,339 A 2/1977 Ross et al
4,038,495 A 6/1977 Wong
4,038,498 A 6/1977 Pamplikian
4,081,142 A 1/1977 Tuttle
4,099,527 A 7/1978 Howell
4,111,391 A 9/1978 Wallis
4,123,071 A 10/1978 Cheatham et al.
4,205,676 A 6/1980 Humphrey et al.
4,215,436 A 8/1980 Armstrong
4,216,889 A * 12/1980 Wright ..... 433/86
4,248,589 A 2/1981 Lewis
4,250,872 A 2/1981 Tanori
4,257,416 A 3/1981 Poggie
4,267,847 A 5/1981 Wasserstrom
4,279,326 A 6/1981 Schori
4,278,823 A 6/1981 Phillips et al.
4,278,078 A 7/1981 Smith
4,282,867 A 8/1981 Du Toit
4,289,130 A 9/1981 Nehring
4,290,434 A 9/1981 Shuler
4,294,251 A 10/1981 Greenwald et al.
4,300,548 A 11/1981 Stanley
4,301,977 A * 11/1981 Carnahan et al. ..... 239/331
4,313,689 A 2/1982 Steele
4,314,560 A 2/1982 Halligan et al.
4,340,889 A 8/1982 MacNeill
4,350,477 A 9/1982 Mizzi
4,395,208 A 7/1983 McCullough
4,434,810 A 3/1984 McCullough
4,434,805 A 3/1984 Hanson
4,438,343 A 3/1984 Bertsch et al.
4,438,348 A 3/1984 Peyman et al
4,438,406 A 3/1984 McCullough
4,441,849 A 5/1984 Willing
4,449,527 A 5/1984 Kaldewey
4,451,099 A 5/1984 Mabuo
4,460,350 A 7/1984 Somerville et al.
4,468,221 A 8/1984 Mayfield
4,472,130 A 9/1984 McCullough
4,482,345 A 11/1984 Chow et al.
4,484,399 A 11/1984 Lacey
4,489,250 A 12/1984 Nehring
4,498,894 A 1/1985 Wuchinich
4,502,502 A 3/1985 King
4,508,532 A 4/1985 Dawes et al.
4,508,507 A 4/1985 Vale
4,512,886 A 4/1985 McCullough
4,515,532 A 5/1985 Willing
4,519,385 A 5/1985 Atkinson et al.
4,520,973 A 7/1985 Lester et al.
4,524,770 A 6/1985 Akers et al.
4,535,773 A 8/1985 Yoon
4,537,602 A 8/1985 Lissi
4,537,899 A 8/1985 Sato
D281,535 S 11/1985 Atkinson et al.
4,552,130 A 11/1985 Kinoshita
4,553,957 A 11/1985 Williams et al.
4,561,434 A 12/1985 Atkinson
4,564,358 A 12/1985 Carlson
4,589,846 A 4/1986 Campbell et al.
4,583,531 A 4/1986 Matsuhira
4,592,349 A 6/1986 Ebling et al.
4,596,558 A 6/1986 Bodai et al.
4,604,748 A 7/1986 Mall
4,604,089 A 8/1986 Bassingthwaite et al.
4,621,770 A 11/1986 Sapse
4,634,420 A 1/1987 Spinosa et al.
4,636,621 A 1/1987 Atkinson
4,647,328 A 3/1987 Diamond
4,655,197 A 4/1987 Atkinson
4,655,906 A 4/1987 Thayer et al
4,655,752 A 4/1987 Honkanen et al.

4,695,754 A 9/1987 Stubenrauch
4,695,765 A 9/1987 Swift
4,698,829 A 5/1987 Nakang
4,697,653 A 9/1987 Ogle et al.
4,697,140 A 9/1987 Olsen
4,698,869 A 9/1987 Mashimoto
4,705,500 A 11/1987 Reimels et al.
4,741,678 A 5/1988 Nakang
4,748,978 A 6/1988 Nakajima
4,799,369 A 21988 Bazz et al.
4,704,105 A 9/1988 Reimels et al.
4,765,105 A 9/1988 Reimels et al.
4,765,508 A 0/1988 Akkerma
4,778,448 A 10/1988 Perkin et al.
4,799,481 A 1/1989 Timmon et al.
4,817,599 A 4/1989 Davey
4,837,868 A 2/1989 Lehn
4,872,837 A 10/1989 Issalene et al.
4,892,464 A 1/1990 McCullough et al.
4,911,821 A 3/1990 McCullough et al.
4,923,458 A 5/1990 Illami et al.
4,927,340 A 5/1990 McCullough
4,935,005 A 6/1990 Hasan
4,941,872 A 7/1990 Pelin et al.
4,957,483 A 9/1990 Chatar et al.
4,978,282 A 12/1990 Yo et al.
4,982,738 A 1/1991 Hanstorp et al.
5,019,070 A 5/1991 Lindm
5,037,431 A 8/1991 Summer et al.
5,048,488 A 9/1991 Grolle et al.
5,049,071 A 9/1991 Davis et al.
5,053,022 A 10/1991 Barlow
5,054,547 A 10/1991 Frank et al.
5,057,013 A 10/1991 Fleet
5,098,387 A 3/1992 Wiese et al.
5,098,426 A 3/1992 Peterson et al.
5,108,420 A 4/1992 Wu
5,128,508 A 4/1992 Sandeinger et al.
5,142,723 A 8/1992 Lustig
5,147,392 A 9/1992 Kollas et al.
5,178,779 A 12/1992 Glenberg
5,178,629 A 1/1993 Kollas et al.
5,180,714 A 1/1993 Sundstrom et al.
5,188,591 A 2/1993 Dorsey, III
5,195,956 A 3/1993 Phillips
5,195,959 A 3/1993 Smith
5,197,648 A 3/1993 Im
5,205,309 A 4/1993 Clawson et al.
5,224,929 A 7/1993 Bandyopadhyay
5,244,459 A 9/1993 Hill
5,261,905 A 11/1993 Dorsey, III
5,269,798 A 12/1993 Grolle et al.
5,281,214 A 1/1994 Wilkins et al.
5,295,976 A 3/1994 Bales et al.
5,303,733 A 4/1994 Casale et al.
5,308,351 A 4/1994 Weldon
5,322,502 A 6/1994 Dorse
5,372,586 A 6/1994 Kollas
5,333,603 A 8/1994 Schramm
5,334,140 A 8/1994 Phillips
5,336,208 A 8/1994 Hobson et al.
5,340,351 A 8/1994 Zimmer
5,388,277 A 2/1995 Phillips
5,388,642 A 2/1995 Casale et al.
5,391,148 A 2/1995 Dorsey
RE34,788 E 1/1995 Casale
5,431,876 A 7/1995 Dalrad et al.
5,447,496 A 9/1995 Dorsey, III
5,448,597 A 9/1995 Zimmer
5,470,305 A 11/1995 Arnett et al.
5,484,402 A 1/1996 Bassler et al.
5,487,649 A 1/1996 Dorsey, III et al.
5,514,089 A 5/1996 Vaillancourt et al.
5,532,796 A 6/1996 Dorsey, III
5,542,440 A 10/1996 McCabe et al.
5,573,504 A 11/1996 Dorsey, III
5,578,000 A 11/1996 Gayl et al.
5,586,977 A 12/1996 Dorsey, III
5,607,391 A 3/1997 Klinger et al.
5,609,575 A 3/1997 Jacobsen
D383,809 S 11/1997 Kollas et al.
5,707,351 A 1/1998 Dorsey, III
5,718,668 A 2/1998 Arnett et al.
5,746,721 A 5/1998 Frank et al.
5,792,096 A 8/1998 Pelis et al.
5,792,168 A 8/1998 Pelis et al.
5,807,313 A 9/1998 Dalk et al.
5,810,778 A 9/1998 Chin et al.
5,827,218 A 10/1998 Bigwan et al.
5,924,448 A 7/1999 Wan
5,941,891 A 8/1999 Valley et al.
6,022,309 A 2/2000 Arnett et al.
6,050,754 A 4/2000 Frank et al.
6,099,772 A 8/2000 Kinary et al.
6,099,984 A 8/2000 Hannigan et al.
6,108,494 A 8/2000 Jacobs et al.
6,136,894 A 12/2000 Tremaine et al.
6,142,744 A 11/2000 Shipp
6,178,847 B1 1/2001 Humphreys, Jr. et al.
6,179,887 B1 1/2001 Hennigan et al.
6,200,292 B1 3/2001 Frank et al.
6,213,978 B1 4/2001 Hobson et al.
6,302,527 B1 10/2001 Hennigan et al.
6,398,238 B1 2/2002 Tims et al.
6,371,984 B1 4/2002 Jackson et al.
6,394,996 B1 5/2002 Lamothe et al.
6,471,660 B1 10/2002 Hannigan et al.
6,485,452 B1 11/2002 Frank et al.
6,623,443 B1 9/2003 Hobson et al.
6,626,827 B1 9/2003 Pelis et al.
6,685,669 B1 2/2004 Dell et al.
2001/0025160 A1 9/2001 Pelis et al.
2002/0002357 A1 1/2002 Jackson et al.

FOREIGN PATENT DOCUMENTS

EP 0 258 901 3/1988
FR 1 325 670 3/1963
GB 1 264 138 2/1972
GB 2 067 474 A 6/1981
WO WO81/01794 7/1981
WO WO81/02315 8/1981
WO WO85/05982 9/1985
WO WO86/04247 8/1986
WO WO91/13638 9/1991
WO WO92/21388 12/1992
WO WO93/17733 9/1993
WO WO94/13199 6/1994
WO WO94/19050 9/1994
WO WO94/23773 10/1994

OTHER PUBLICATIONS

ELI DuCharme Hydrosurgery, Pump believed published before Apr. 19, 1993.

Medtronic—Unique Products for Advanced Operative Laparoscopy 798—3bd.

Select One...™ Minimal Access Surgery System, Introducing the SelectOne™ Bipolar Instrument, Combined Aspen Surgical Systems, Copyright Jul. 1993, 3Bd.

Select One...™ Minimal Access Surgery System, The Modular Instrument System for Surgical Endoscopy, SelectOne System by Combined, Aspen Surgical Systems believed published before Apr. 19, 1993.

Davol—Shuttle-Flo™ Irrigator, Davol, Inc.; Instruction booklet P 041082-0, 9/1/18, Nov. 1990.

Count On US (Introducing Over 900 Patented Unified Quality Components), Unidyn-Quali., 1993
Rain® Bird® Brochure Irrigator, Why do I need the Rain Sensor Irrigator? Rain® Bird®, for believed published before Apr. 19, 1993
"Simultaneous pulsatile lavage and/or irrigation with suction . . ."
Pulsatile Lavage Debridement System, Interface No. 82-898-5150-04-05/7.5M CBS Zimmer, Inc., Snyder Labs Inc. 1982.
Hydro-Dimmy™ /Hydro-Dimmitor™ Information Booklet Installation/Operating Instructions for "Quick-Disconnect" Probe Tips (2 sheets) believed published before Apr. 19, 1993
Rain®Irrigator Is No Longer An Issue, Hydro-Dimmitor System, 1993/JD PP/ICM Intl. 1992, Rain Bird® Corp. Tuebingen, West Germany
A Fully Integrated Laparoscopic Irrigation and Instrumentation System, Cabot Medical, Langhorne, PA Apr. 1993, HIM, L/T (4 sheets)
Advances in Pulsavage, The Irrigation Pump System, Cabot Medical, Langhorne, PA Apr. 1993 (1 sheets)
InvESET™ . Fluid Management System User' Manual, Smith & Nephew Dyonics Inc., copyright 1992, P/N 0201470.
Davol, Arthro-Pak® , Instructions For Use, 050077-0 9010 C R Bard, Inc. Cranston RI, Jan. 1990
Davol, Arthro-Pic High-Flo Irrigator, Bard, CP-AP0015000 Aug. 1992 '04 C R Bard Inc. Cranston, RI.
'IM Fluid Control System, For Precise Control of all Arthroscopic Procedures, 70 2020 5450-9, 1992 3M
Davol, Instruments for Use, Irrigator-™ Suction/Irrigator, BARD, 034009-0 (2 sheets) Jan. 1993
"Introducing the multi-functional instrument for virtually every laparoscopic case", USSC, Auto Suture Company, Copyright 1992, 530322 pp. 1004 Jul. 1992
Davol's Answers to Plaintiff's First Set of Interrogatories dated Jun. 1996
Davol's Supplemental Answers to Plaintiff's First Set of Interrogatories dated Feb. 14, 1997
Deposition of Roger B. Dennis, pp. 1-177, with Index pp. 1-19 and corrections and signature pages 1-3, dated May 7, 1997
Rule 26(a) (2) Report Report of Dr. Hewith M. Hansen Relating to Davol's Defenses to Stryker's Infringement Claims Under the '402 Patent dated Oct. 29, 1997 including Exhibits A-D
Rule 26 (a) (2) Report Report of Roger B. Dennis Relating to Davol's Defenses to Stryker's Infringement Claims Under the '402 Patent dated Oct. 30, 1997 including exhibits A-D
Rule 26 (a) (2) Rebuttal Report Report of Dr. Hewith M. Hansen, M.D. Relating to Stryker's Infringement of United States Patent No. 5 391 145 and United States Patent No. 5 586 977, dated Dec. 8, 1997
Deposition of Hewith M. Hansen, pp.1-281 with index pages 1-32 dated Feb. 13, 1998.
Davol's Supplemental Answers to Plaintiff's First Set of Interrogatories dated Feb. 16, 1997
Ruling on Claim Construction Disputes dated Apr. 24, 1998.
Trial-vol. IV, IV, Nov. 17, 1998 (Hagen-Cross; Dennis-direct, with disc, Cross) multi-chromal fiber-optic rotary multipage 55-41 (actual pp. 526-705).
Trial-vol. V, Nov. 18, 1998 (Dennis-direct) multipage 623-705, actual pp. 3-44
Memorandum Opinion and Order Denying Motion for Judgment as a Matter of Law dated May 26, 1999.
Author D. Little (Tudo) Dec. 8, 1992 letter to Davol.
Bard (Rod Cliby) Oct. 16, 1992 fax to John Shemonek.
Author D. Little (Tudo) Nov. 12, 1992 fax to John Shemonek (Davol).
Author D. Little (Tudo) Dec. 17, 1992 letter to John Shemonek.
Author D. Little (Tudo) Jan. 22, 1993 letter to John Shemonek.
Saline Pump Development Program, Davol Inc., Jan. 18, 1993, Cranbridge, MA.
Telecon Nov. 2, 1992 search for John Shemonek at Scroll Pumps.
Author D. Little (Davol) Sep. 8, 1992 letter to Albert Solis.
Davol (Dilva) Jan. 4, 1993 letter to Author D. Little.
Saline Scroll Pump Development Program.
Scroll Technology in Medical Products.

* cited by examiner

U.S. Patent Dec. 5, 2006 Sheet 1 of 17 US 7,144,383 B2

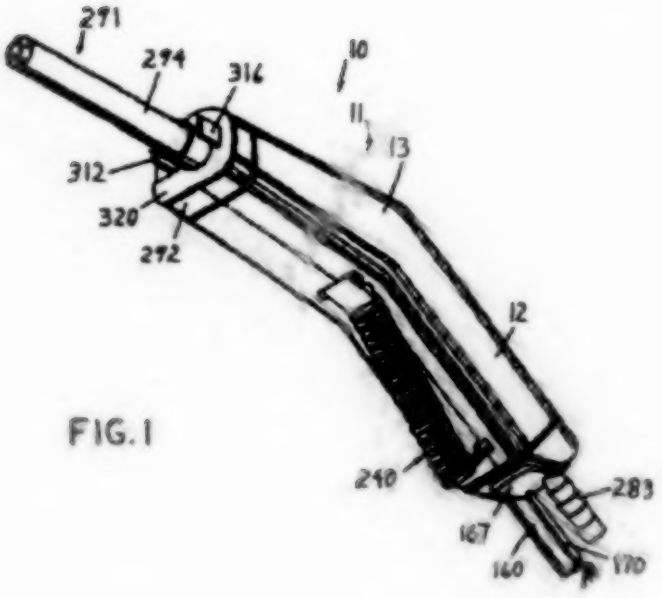


FIG. 1

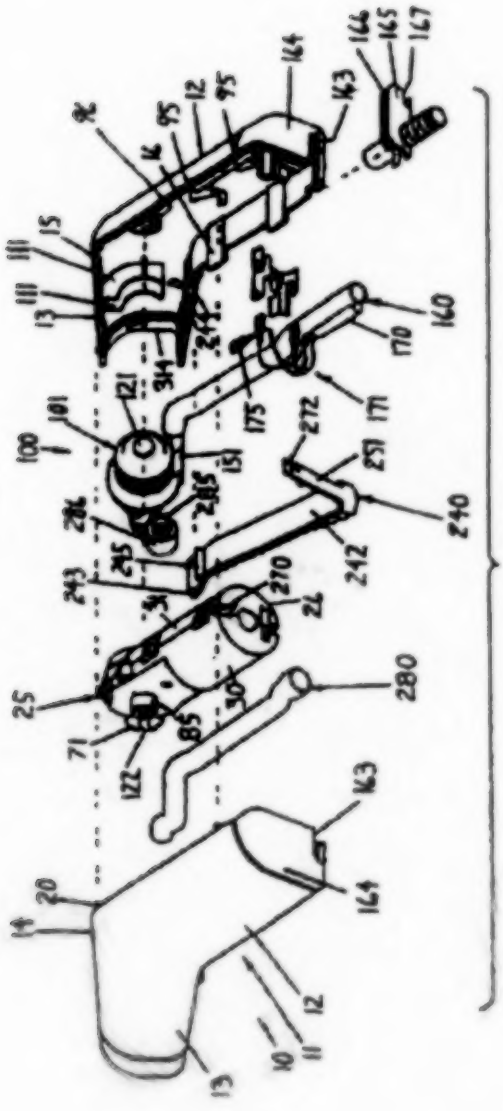

FIG. 2

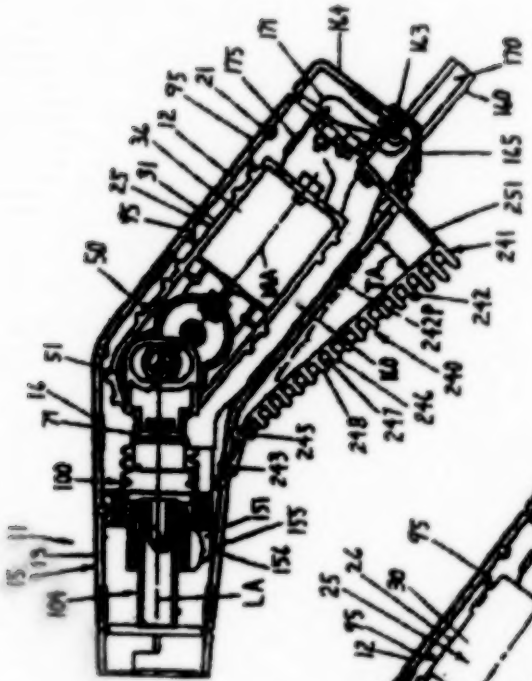

FIG. 4

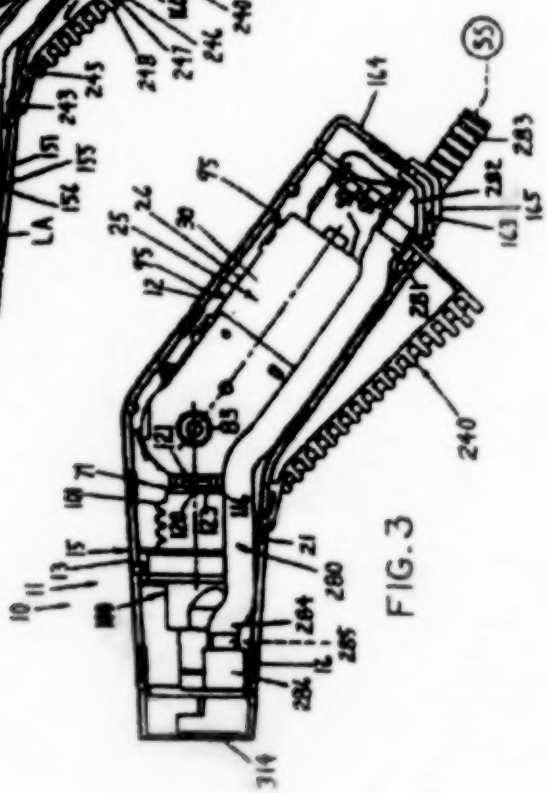

FIG. 3

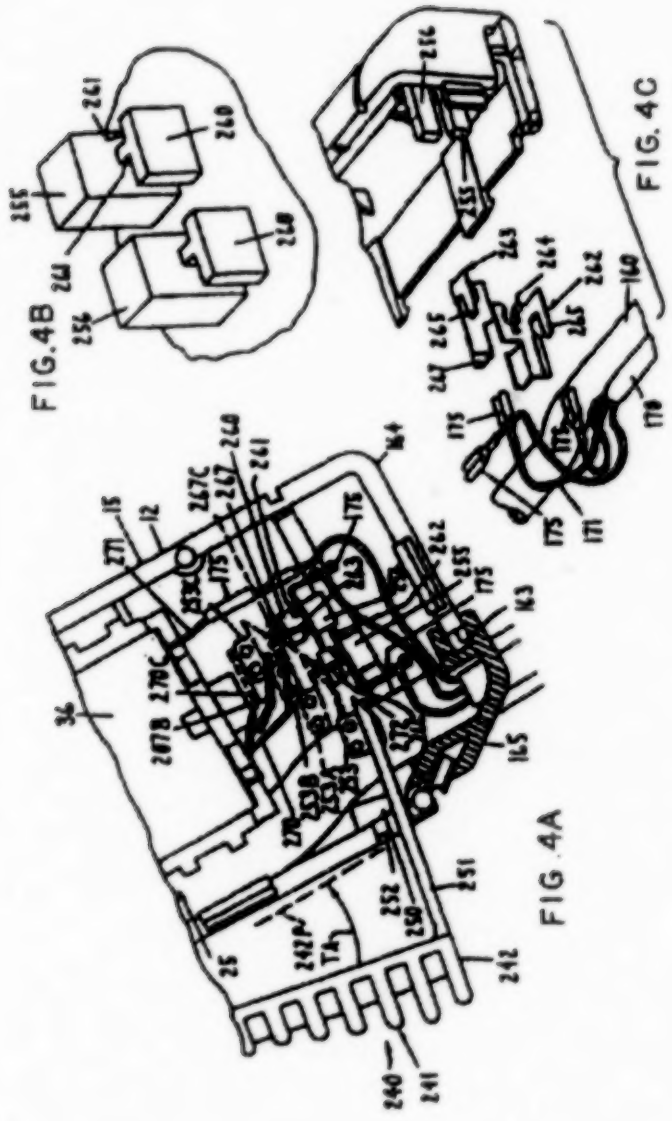

FIG. 4A

FIG. 4B

FIG. 4C

FIG. 5

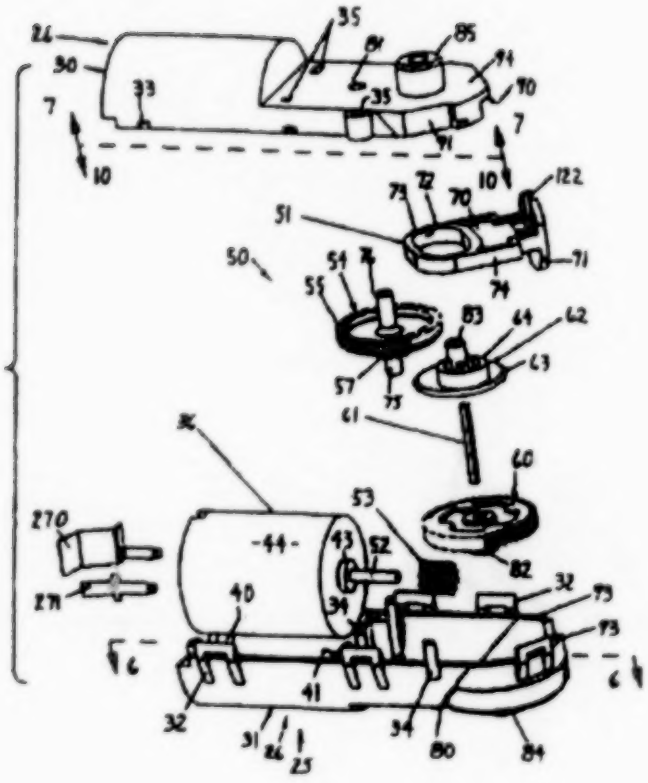
26
30
33
35
81
85
94
90
7
10
91
122
73
72
70
51
50
54
76
55
83
64
62
63
57
75
61
36
60
53
270
271
-44-
43
52
82
40
34
32
93
41
6
31
26
25
80
84

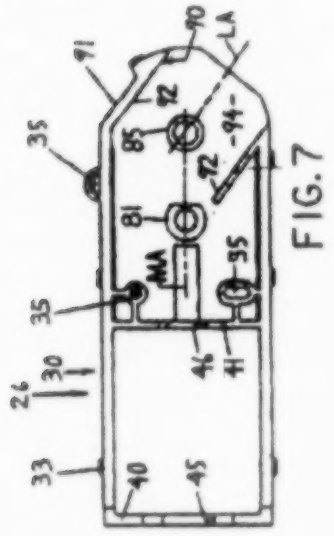


FIG. 7

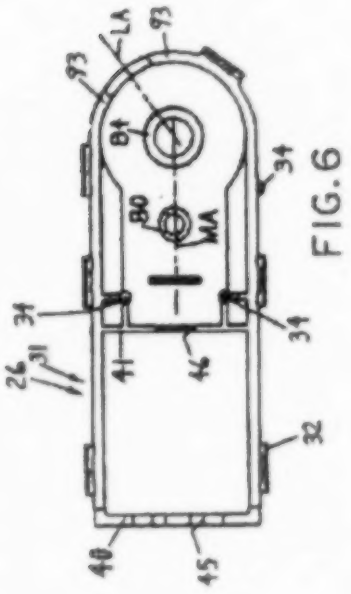


FIG. 6

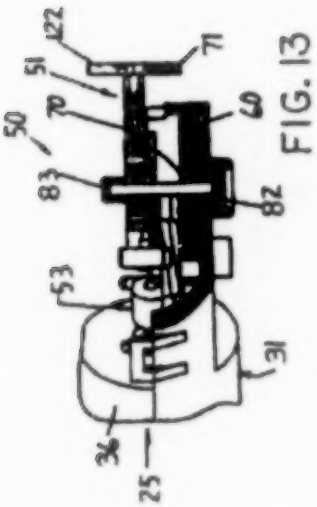


FIG. 13

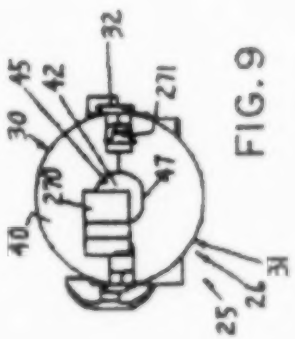


FIG. 9

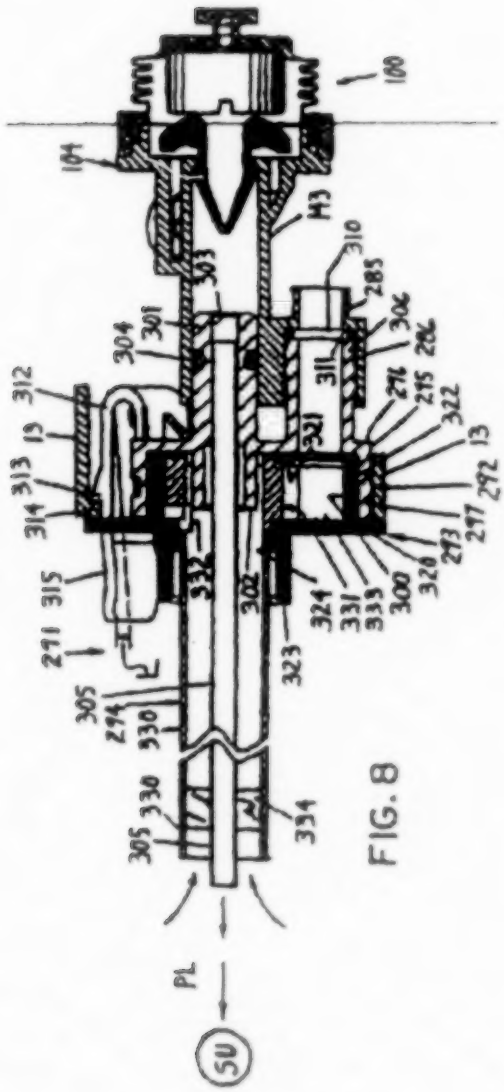
100
104
143
310
285
306
286
311
303
301
304
312
13
313
314
315
291
305
294
330
332
302
323
324
331
333
300
320
293
297
292
13
322
295
296
321
305
330
334
PL
SU

FIG. 8

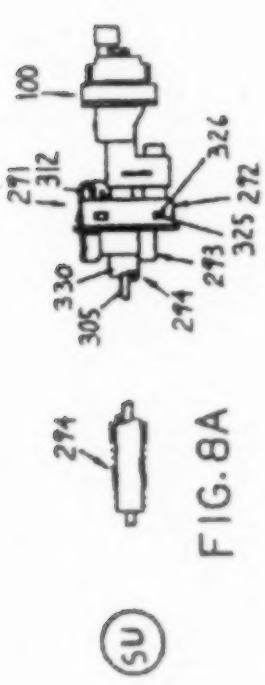
100
271
312
326
272
325
273
330
305
294
294
SU

FIG. 8A

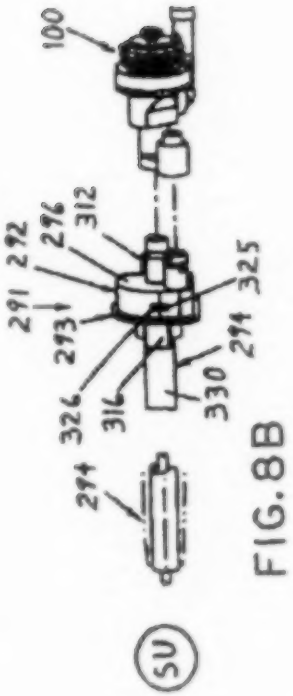
100
272
276
312
291
325
273
294
326
316
330
294
SU

FIG. 8B

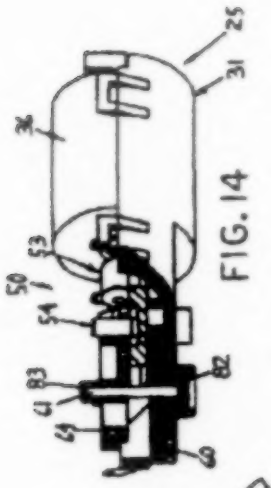

FIG. 14

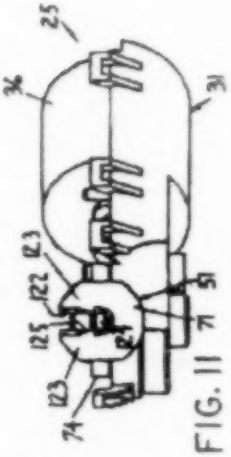

FIG. 11

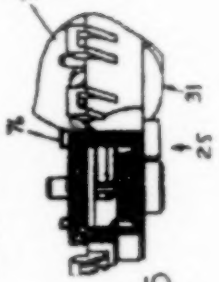

FIG. 15

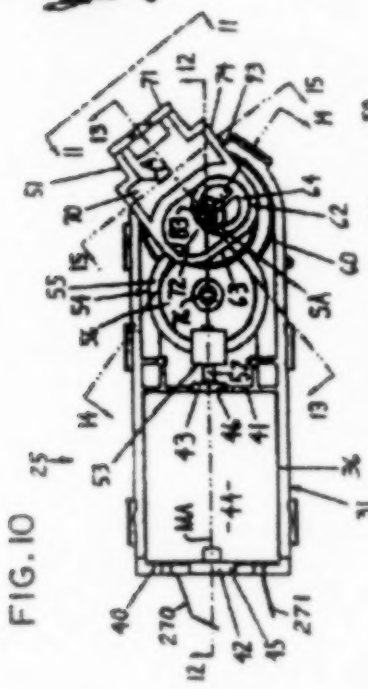

FIG. 10

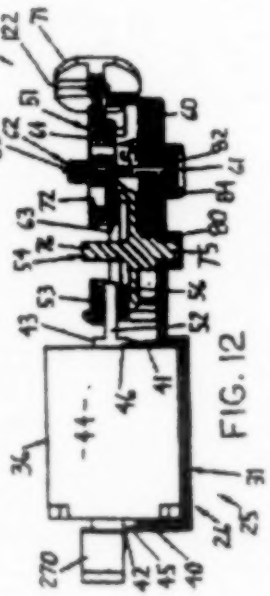

FIG. 12

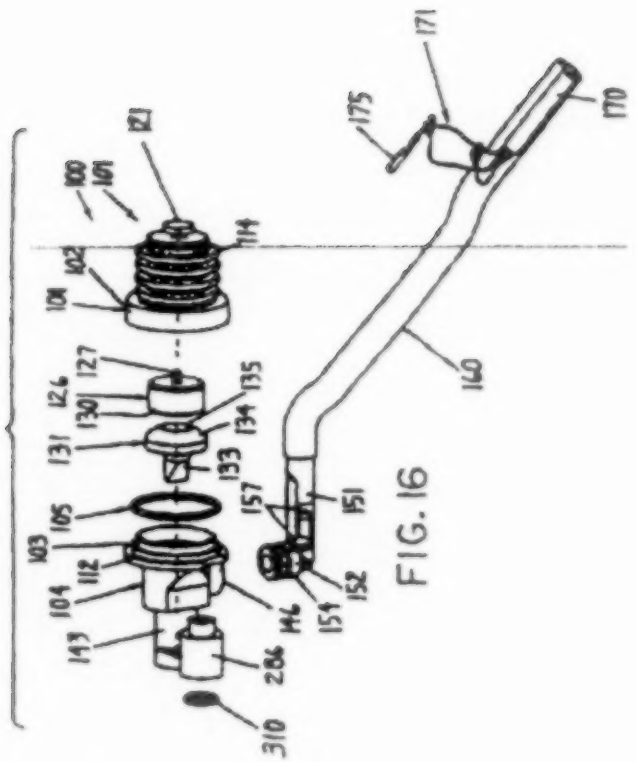
171
175
170
121
100
101
114
102
108
127
126
130
135
131
134
133
157
151
105
103
112
104
146
152
154
143
284
310
140

FIG. 16

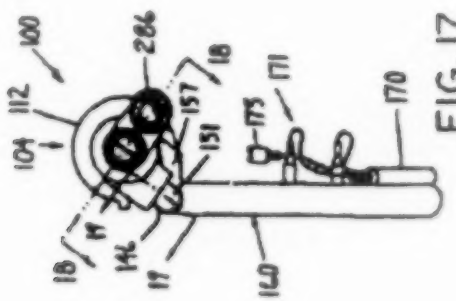
100
284
18
112
157
171
104
151
175
170
18
17
146
17
140

FIG. 17

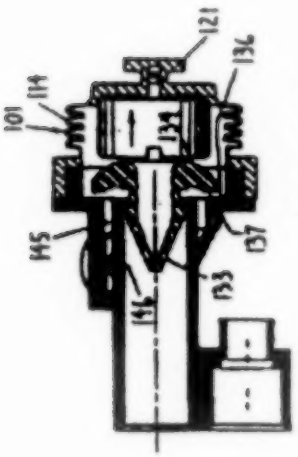


FIG. 18A

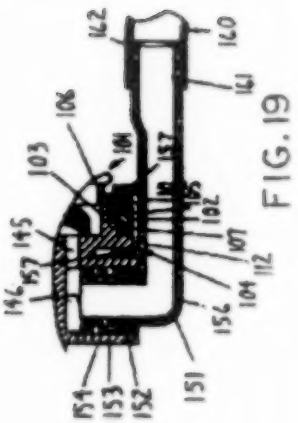


FIG. 19

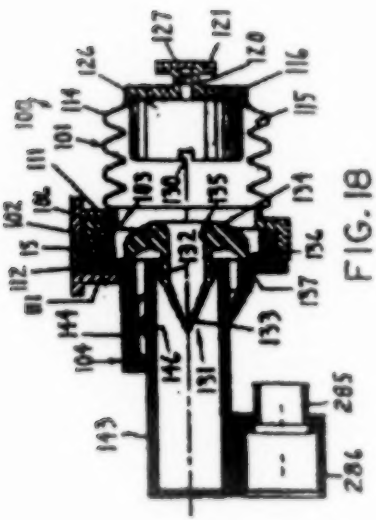


FIG. 18

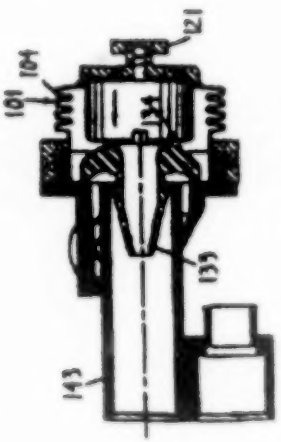


FIG. 18B

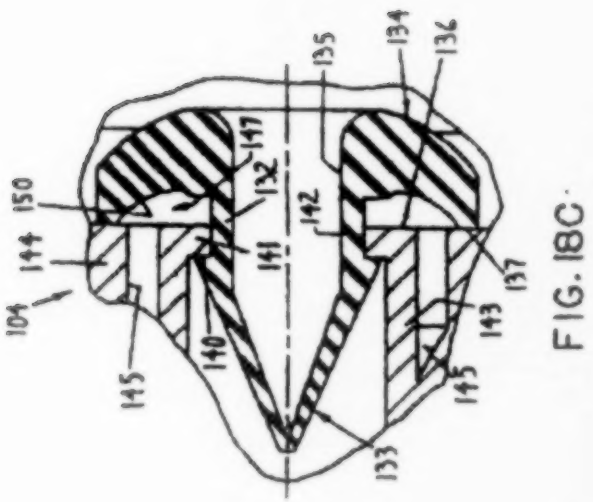


FIG. 18C

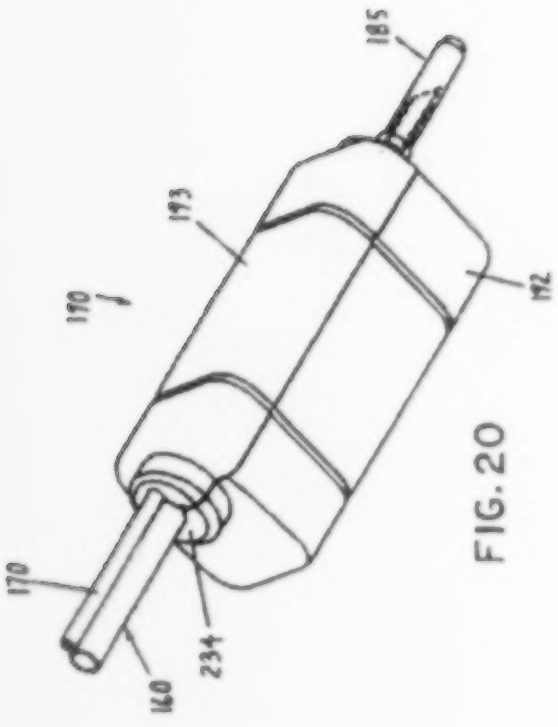


FIG. 20

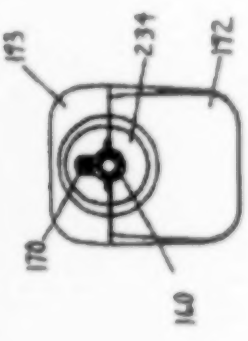


FIG. 21

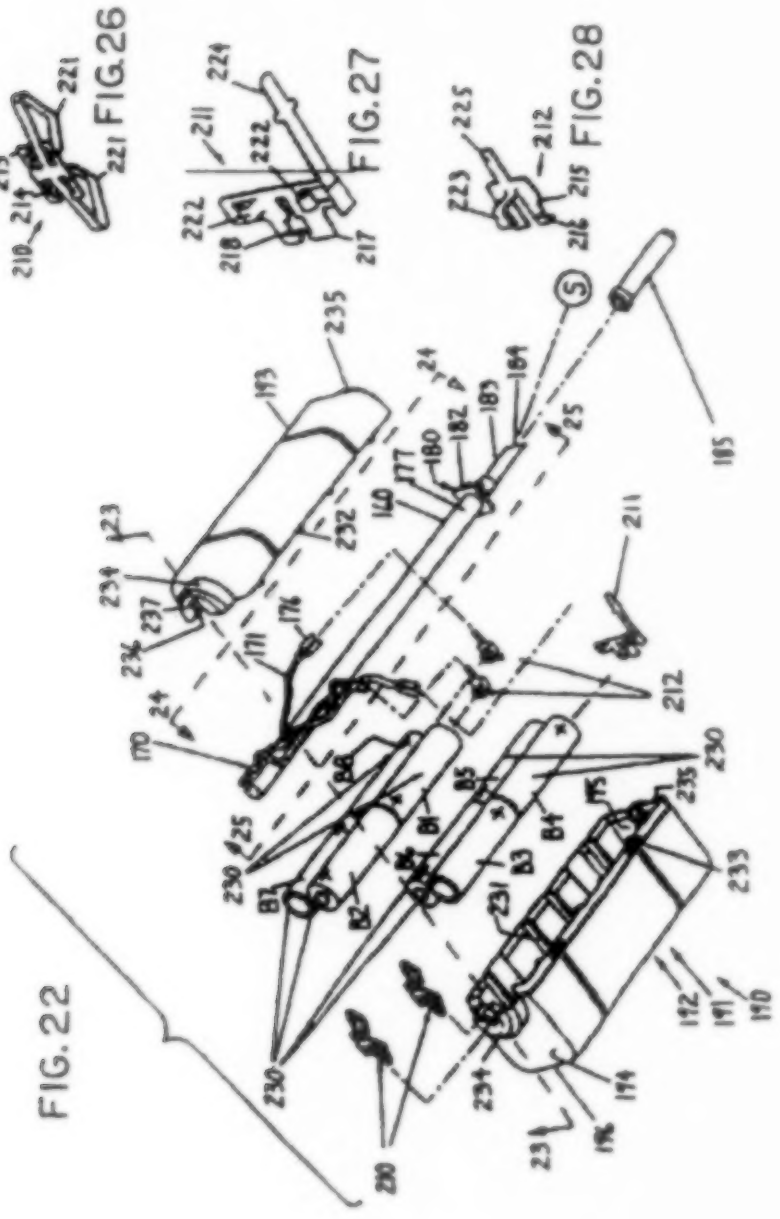
FIG.26
FIG.27
FIG.28
FIG.22

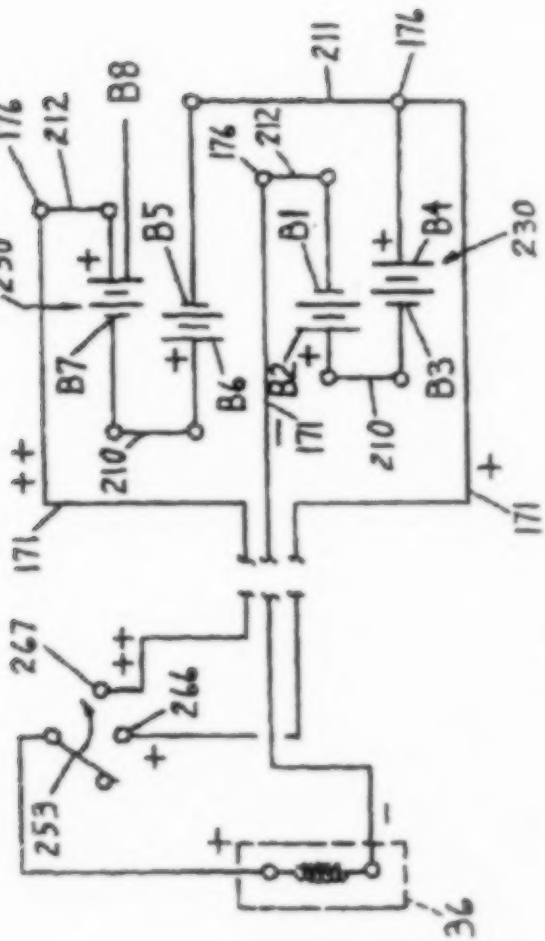


FIG. 22A

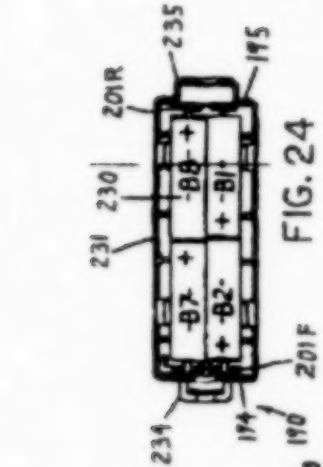


FIG. 24

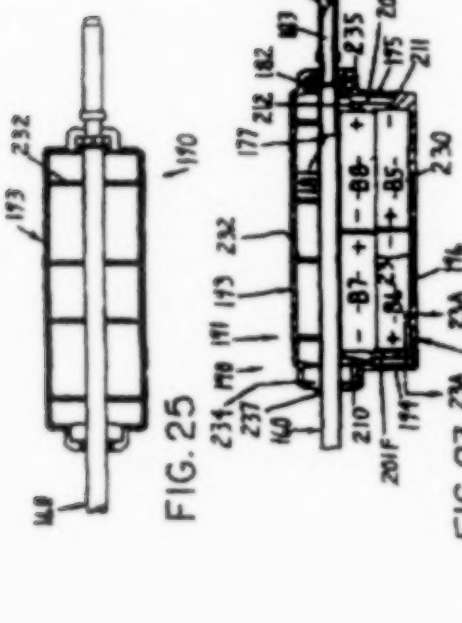


FIG. 23




FIG. 25

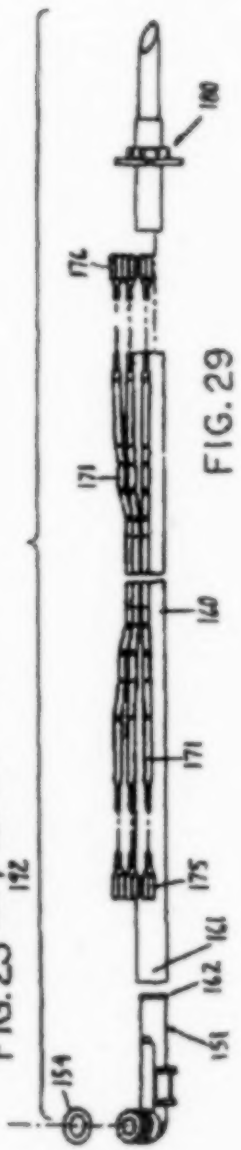


FIG. 29

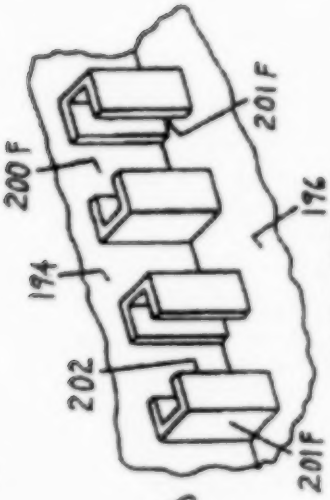


FIG. 23A

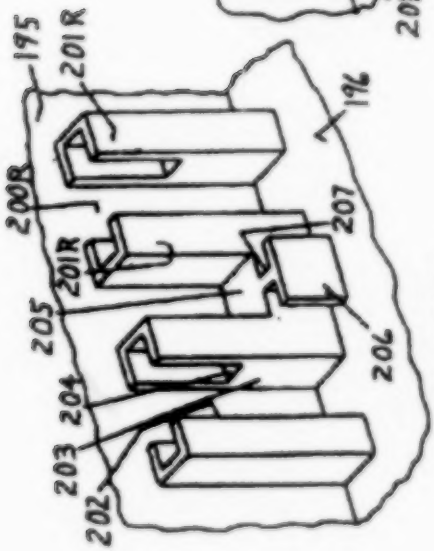


FIG. 23B

# SURGICAL/MEDICAL IRRIGATING HANDPIECE WITH VARIABLE SPEED PUMP, INTEGRATED SUCTION AND BATTERY PACK

This is a continuation of Ser. No. 09/460,705, filed Dec. 14, 1999, now U.S. Pat. No. 6,746,419, which is a continuation of Ser. No. 09/009,657, filed Jan. 20, 1998, now U.S. Pat. No. 6,022,329, issued Feb. 8, 2000 which is a continuation of Ser. No. 08/559,133, filed Nov. 17, 1995, now U.S. Pat. No. 5,718,668, issued Feb. 17, 1998 which is a continuation of Ser. No. 08/049,144, filed Apr. 19, 1993, now U.S. Pat. No. 5,470,305.

## FIELD OF THE INVENTION

This invention relates to a surgical irrigation with a built in pulsing pump.

## BACKGROUND OF THE INVENTION

Grulke et al U.S. Pat. No. 5,046,486, assigned to the Assignee of the present invention, discloses a surgical pulsed irrigation handpiece which produces a pulsed irrigation liquid output capable of loosening and floating debris at a surgical site for subsequent removal (as by suction). This prior pulsed irrigation handpiece has been on the market for several years and has proved generally effective for its intended use and hence has been popular in the surgical community.

However, in a continuing effort to improve on existing devices of this general kind, the present invention has been developed. As compared to the above-mentioned prior device, a pulsed irrigation handpiece embodying the present invention is producible at lower cost, produces sharper liquid pulse transients (particularly the pulse "off" transient), requires no con-

nection to any operating room power source (e.g. compressed air) or to an external pump, and instead is self-contained, requires only external connection to a irrigation liquid source (e.g. conventional irrigation liquid bag), provides better suction (when suction is required), is more compact, and is conveniently shaped to be held either as a pistol or a wand (by the handle or barrel).

Other objects, purposes and advantages of the invention will be apparent to those acquainted with apparatus as general kind upon reading the following description and inspecting the accompanying drawings.

## SUMMARY OF THE INVENTION

A pulsed irrigation handpiece comprises pulsed irrigation liquid outlet means for applying liquid pulses to a surgical site, pump means reciprocatingly drivable for pumping pulses of irrigation liquid through said outlet means, powered drive means for reciprocatingly driving said pump means and housing means containing said pump means and drive means.

## BRIEF DESCRIPTION OF THE DRAWINGS

FIG. 1 is a pictorial view of a handpiece embodying the invention.

FIG. 2 is a laterally exploded pictorial view of the FIG. 1 handpiece.

FIG. 3 is an enlarged elevational view of the FIG. 1 handpiece with the leftward housing part removed.

FIG. 4 is a view similar to FIG. 3 but with the suction hose removed, the left drive unit shell part re-

moved and the drive unit exposed in central cross-section, such that FIG. 4 approximates a central cross-sectional view of the FIG. 1 handpiece.

FIG. 4A is an enlarged fragment of FIG. 4 detailing the rearward portion of the handle.

FIG. 4B is an enlarged fragmentary pictorial view, taken from the front, of the electrical contact support posts seen in FIG. 4A.

FIG. 4C is an enlarged fragmentary exploded pictorial view of the electrical contacts, associated with the FIG. 4B posts and associated electrical conductors from the battery supply.

FIG. 5 is an enlarged, exploded, pictorial view of the drive unit of FIG. 2.

FIG. 6 is a sectional view substantially taken on the line 6—6 of FIG. 5, and provides a top view of the bottom drive unit shell part of FIG. 5 (the rightward one of FIG. 2) with the drive components removed to show the interior configuration of that shell part.

FIG. 7 is a sectional view substantially taken on the line 7—7 of FIG. 5, and provides a view similar to FIG. 6 but showing the interior configuration of the other drive unit shell part (the upper one in FIG. 5 and leftward one in FIG. 2).

FIG. 8 is an enlarged central cross-sectional view of a tip unit usable with the handpiece of FIG. 2 and showing same installed in a pump unit shown in central cross-section substantially as in FIG. 4.

FIG. 8A is a reduced size, fragmentary, side elevational view of the apparatus of FIG. 8.

FIG. 8B is a pictorial view of the apparatus of FIG. 8A.

FIG. 9 is an end elevational view of the drive unit, taken from the right end in FIGS. 2 and 3.

FIG. 10 is a sectional view substantially taken on the line 10—10 of FIG. 5 and showing the drive unit with one shell part (the left one in FIG. 2 and top one in FIG. 5) removed to show the motor and transmission.

FIG. 11 is an elevational view of the drive train substantially taken on the line 11—11 of FIG. 10.

FIG. 12 is a central cross-sectional view substantially taken on the line 12—12 of FIG. 10.

FIG. 13 is a fragmentary cross-sectional view substantially taken on the line 13—13 of FIG. 10.

FIG. 14 is a cross-sectional view substantially taken on the line 14—14 of FIG. 10.

FIG. 15 is a sectional view substantially taken on the line 15—15 of FIG. 10.

FIG. 16 is an exploded pictorial view of the pump unit of FIG. 2 in an enlarged scale.

FIG. 17 is a front end elevational view of the pump unit of FIG. 16 taken substantially from the left side of FIGS. 2–4 and 16.

FIG. 18 is a central cross-sectional view of the pump unit of FIG. 17 taken substantially on the line 18—18 of FIG. 17.

FIG. 18A is a fragment of FIG. 18 showing the pump unit at the beginning of an intake stroke.

FIG. 18B is a fragment of FIG. 18 showing the pump nearing the end of an output pulse.

FIG. 18C is a fragmentary enlargement of FIG. 18 showing the valve member.

FIG. 19 is a fragmentary cross-sectional view showing the connection of the pump unit to the liquid supply hose.

FIG. 20 is a pictorial view of the electric power supply unit connected to the FIG. 2 handpiece.

FIG. 21 is a left end view of the FIG. 20 electric power supply unit.

FIG. 22 is an exploded pictorial view of the electric power supply unit of FIG. 20.

FIG. 22A is an electrical schematic of the FIG. 2 handpiece and FIG. 20 electric power supply unit.

FIG. 23 is a central cross-sectional view taken substantially on the line 23—23 of FIG. 22.

FIG. 23A is an enlarged fragmentary pictorial view of the support structure for battery contacts at the forward (left in FIG. 23) end of the electric power supply casing.

FIG. 23B is an enlarged pictorial view similar to FIG. 23A but showing the support structure for battery contacts at the rearward (rightward in FIG. 23) end of the power supply casing.

FIG. 24 is a sectional view substantially taken on the line 24—24 of FIG. 22 and showing the electric power supply unit with its top cover removed.

FIG. 25 is a sectional view substantially taken on the line 25—25 of FIG. 22 and showing the underside of the cover of the power supply casing.

FIGS. 26, 27 and 28 are enlarged pictorial views of battery contacts of FIG. 22.

FIG. 29 is an enlarged fragmentary pictorial view of an embodiment of the liquid supply and electric wiring harness of the apparatus of FIGS. 2 and 20 but showing a modification in the attachment of the electrical and liquid handling components.

In the following detailed discussion the terms "up", "down", "right" and "left", and variations thereon, refer to structural elements in their positions in specified drawing figures.

## DETAILED DESCRIPTION

A pulsed irrigation handpiece 10 (FIGS. 1 and 2) embodying the invention comprises a hand-held housing 11 having a handle 12 and a barrel 13 which extends forward from the upper end of the handle 12 at about a 130° to 150° (here about 145°) angle thereto.

The housing 11 is hollow and, for convenience in assembling the handpiece 10, is constructed as later-

ally opposed concave left and right housing parts 14 and 15 (FIG. 2). The housing parts 14 and 15 are preferably molded rigid plastic elements held together rigidly by any convenient means, here comprising undercut snap fit tabs 16 protruding from the top and bottom edges of the right housing part 15 to snap over an interior edge flange (not shown) on the top and bottom edge of the left housing part 14. If desired, precise registry together of the two housing parts can be assisted by laterally projecting pins 20 distributed along the edges of one housing part (here the left housing part 14) piloted in holes 21 (FIG. 4) in the opposed edges of the other housing part (here 15). Upon completion of assembly of the handpiece 10, the two housing parts 14 and 15 may be adhesively bonded together. The handpiece is intended to be a disposable item and therefore access to the interior of the housing for purposes of repair is not needed.

Drive Unit

The drive unit 25 (FIGS. 2–15) is self contained in its own shell 26 (FIG. 2). For convenience in assembly, the shell 26 comprises two opposed concave shell parts 30 and 31 respectively disposed to the left and right in FIG. 2. The shell parts 30 and 31 are preferably of rigid molded plastics material. When the drive unit 25 has been assembled, as in FIGS. 2 and 9, the shell parts 30 and 31 are held fixedly together by any convenient means, here by resilient snap connection of generally U-shaped clips 32, molded in spaced relation along the perimeter edge of the shell part 31 which overlap the perimeter edge of the shell part 30 and snap over tabs 33 protruding therefrom, as seen in FIGS. 5–7. Precise location of the shell parts 30 and 31 with respect to each other is assisted by locator

pins 34 fixedly protruding from the shell part 31 and holes 35 in the opposed portions of the shell part 30.

A single conventional DC energizable electric motor 36 (FIGS. 4 and 5) is snugly housed in the space between the left and right (FIG. 2) shell parts at the rear (left in FIGS. 5–7, 10 and 12) thereof. The motor 36 is snugly axially located between the rear end wall and a transverse internal bulkhead 41 of the shell 26 (FIGS. 5–7, 10 and 12). The rear end wall 40 and bulkhead 41 have opposed parts in the left and right shell parts 30 and 31, as seen in FIGS. 6 and 7.

Rear and front bosses 42 and 43 respectively extend rearward and forward from the cylindrical casing 44 of the motor 36, as seen in FIGS. 10 and 12), and are supported in corresponding coaxial recesses 45 and 46 in the rear end wall 40 and bulkhead 41 respectively, so as to support the motor casing 44 with respect to the shell 26. A flat 47 on the rear boss 42 (FIG. 9) co-acts with a corresponding flat in the surrounding recess 45 to prevent rotation of the motor casing 44 with respect to the shell parts 30 and 31, such that the motor 36 is antirotationally fixed within the shell 26.

The drive unit 25 further includes a transmission 50 (FIG. 5) coaxial with and forward of the motor 36. The transmission includes a reciprocating link member 51 and is driven from the forward extending, rotating output shaft 52 of the motor 36. The shaft 52 extends coaxially forward through the front boss 43 (FIG. 12) of the motor 36.

The transmission 50 (FIGS. 5 and 12) includes a pinion gear 53 fixed on the motor shaft 52 for rotation

thereby, and a face gear 54 which, as seen in FIG. 12, underlies the pinion gear 53. The face gear 54 has a relatively large diameter central disk 56 carrying upward facing teeth 55 engaging corresponding teeth on the pinion gear 53 for rotation thereby. The face gear 54 includes a secondary pinion gear 57 fixed coaxially beneath the disk 56, and of substantially lesser diameter, which in turn drives a relatively large diameter output gear 60.

It will be understood that the pinion gear 53, face gear 54, secondary pinion 57 and output gear 60 are all provided with a full circumferential (360°) set of teeth, so that continuous rotation of the motor shaft 52 results in continuous rotation of the output gear 60. For convenience in drawing, some or all the gear teeth are not shown in various of the drawings, the toothed meshing connection of the gears therein thus being only schematically shown. See for example FIGS. 4, 10, 12, 13 and 14.

An output shaft 61 is fixed to and coaxially upstanding from the output gear 60 (FIG. 12) and fixedly rotatably drives an eccentric member 62 (FIGS. 5, 10 and 12) spaced above the output gear 60. In this embodiment, the output shaft is of rectangular cross-section to maximize its torque transmitting capability.

The eccentric member 62 comprises a radially extending disk 63 (FIG. 5) coaxial with the output shaft 61 and fixedly surmounted by an eccentric circular cylinder 64 eccentrically rotatable with the output shaft 61.

The link member 51 is generally T-shaped, as seen in FIG. 13, having a plate-like body 70 overlying the

disk 63 of the eccentric member 62 and lying at right angles to the output shaft 61, and further having a plate-like fork 71 fixed at the rightward (FIGS. 5, 10, 12 and 13) end of the plate-like body 70 and extending in a plane substantially parallel to the output shaft 61. The plane of the plate-like fork 71 is perpendicular to the intended direction of reciprocating movement of the link member 51. The body 70, at its end portion remote from the fork 71, has an oblong through opening 72 snugly radially receiving the rotating eccentric cylinder 64 of the eccentric member 62, as seen in FIG. 10. More particularly, the length direction of the oblong opening 72 extends parallel to the plane of the fork 71 and is of sufficient length to accommodate 360° rotation of the eccentric cylinder 64 without movement of the body 70 parallel to the plane of the fork 71. On the other hand, the width of the oblong opening 72, namely in a direction perpendicular to the plane of the fork 71, corresponds substantially to the diameter of the eccentric cylinder 64, providing a sliding clearance between the body 70 and eccentric cylinder 64, so that rotation of the eccentric cylinder 64 will result in reciprocation of the link member 51 in a direction perpendicular to the plane of the fork 71.

The plate-like body 70 includes a thickened rim 73 (FIG. 5) around the oblong opening 72 and may thus be said to form a yoke for coaction with the eccentric cylinder 64. The side edges of the body 70 are preferably also thickened to form parallel longitudinal guide rails 74 (FIG. 10).

The above discussed moving elements of the transmission 50 are located and movably supported within the shell 26 as follows. The face gear 54 has coaxial downward and upward (FIGS. 5–7, 10 and 12)

extending stub shafts 75 and 76 respectively rotatably supported in coaxial bearing bosses 80 and 81 respectively fixed on the opposing faces of the shell parts 31 and 30 (FIGS. 6, 7 and 12). Similarly, the output gear 60 and the eccentric member 62 have respective downward and upward extending stub shafts 82 and 83 coaxial with the output shaft 61 and rotatably supported in respective cylindrical bearing bosses 84 and 85 in the respective shells 31 and 30 (FIGS. 5–7 and 12). The link member 51 is slidably guided for reciprocation in a notch 90 (FIGS. 5 and 7) in the peripheral wall 91 of the left (upper in FIG. 5) shell part 30. The notch 90 has parallel opposed guide faces 92 (FIG. 7) spaced apart to snugly slidably guide therebetween the opposite guide rails 74 of the link member 51, and thus spaced at substantially at the maximum width of the link member. The thickness of the link member is guided for reciprocation between the peripheral edge 93 of the right (lower in FIG. 5) shell 31 and the width wall 94 (FIGS. 5 and 7) of the other shell part 30.

The central length axis LA (FIG. 10) of the link member intersects the central length axis MA of the motor shaft 52 at the axis SA of the output shaft 61 and stub shaft 83 (FIGS. 10 and 12), at an angle equal to the angle between the central length axis of the handle 12 and barrel 13 of the housing 11. Moreover, the length axes of the handle and barrel also intersect at the axis SA of the output shaft 61 when the drive unit 25 is installed in the handpiece housing 11 as hereafter discussed. In effect then, the link member longitudinal axis LA and motor shaft axis MA define the length axis of the barrel 13 and handle 12, respectively, when the drive unit 25 is installed in the handpiece housing 11.

The drive unit 25 is located within the handle 12, as follows. As seen in FIGS. 3 and 4, transverse ribs 95 are molded into the interior surface of the handle 12 at opposing locations in the left and right housing parts 14 and 15 (FIGS. 2–4). For drawing convenience, only the ribs in the right housing part 15 are shown, the ribs in the left housing part 14 being compatible. The ribs 95 locate the drive unit 25 in the rightward/leftward direction in FIG. 2. Further, the drive unit shell bosses 84 and 85 (FIG. 5) protrude sideways from the drive unit shell and are pivotally received in corresponding hollow cylindrical bosses, one of which is shown at 96 in FIG. 2, and which extend toward each other from the interior of the left and right housing parts 14 and 15. The hollow cylindrical boss 96 of the left housing part 14 is not shown but is opposed to and compatible with the housing part 96 shown in the right housing part 15 of FIG. 2. The drive unit 25 is thus, except for the lateral positioning defined by the ribs 95, pivotally located within the handpiece housing 11 and is thus capable of some pivotal floating in the housing to achieve proper alignment of the longitudinal movement axis LA (FIG. 7) of the link member 51 with respect to the barrel 13 and a pump unit 100 (FIGS. 2–4 and 16–18) located in the barrel 13 as hereafter discussed.

Pump Unit

Turning now to the pump unit 100, attention is directed to FIGS. 2–4 and a6 18. The pump units includes a bellows 101 including an axially expandable and contractable, reciprocating, bellows wall 114 (FIG. 18) and a forwardly extending, rigid annular flange wall 102. Such flange wall 102 is loosely telescoped over a rigid, rearwardly extending annular

flange 103 of a rigid, forwardly extending coaxial bellows housing 104.

The bellows 101 and bellows housing 104 are preferably of molded plastics material. A resilient O-ring 105 (FIGS. 16 and 19) is snugly radially disposed between the radially opposed, axially extending annular flanges 102 and 103, to create a fluid seal therebetween and hence between the bellows 101 and bellows housing 104, to prevent fluid leakage therebetween. The bellows 101 and bellows housing 104 have respective axially spaced radially extending steps 106 and 107 joined to the respective annular flanges 102 and 103 and axially spaced apart at a distance substantially greater than the diameter of the O-ring 105, as seen in FIG. 19. The axial extending flanges 102 and 103 and radially extending steps 105 and 106 define an annular chamber 110 in which the O-ring 105 is axially loosely, and radially snugly and sealingly, disposed. Note that the radially opposed surfaces of the axially extending annular flanges 102 and 103 are cylindrical, such that neither has an annular groove in which the O-ring seats. Thus, the O-ring is free to roll on the radially opposed cylindrical surfaces of the axially extending flanges 102 and 103 and the O-ring 105 does not significantly interfere with axial separation of the bellows 101 and bellows housing 104 from each other.

Instead, such axial separation is prevented, as hereinafter further discussed, by a forwardly-rearwardly (leftwardly-rightwardly in FIG. 2) spaced pair of ribs 111 (FIG. 2) extending radially inward from the interior wall of the right housing part 15 and a corresponding, laterally opposed pair of mirror imaged ribs (not shown) extending laterally inward from

the interior wall of the left housing part 14. Such ribs 111 are also schematically indicated in FIG. 18.

The rear (right in FIG. 19) end of the bellows housing axial flange 103 abuts the radially extending step 106 of the bellows 101 and the forward (leftward in FIG. 19) end of the bellows axial flange 102 axially abuts a radial flange 112 which extends radially outward from and forwardly from the bellows housing step 107. The forward end of the bellows axial flange 102 thus radially overlaps the bellows housing step 107 in snug but axially slidable relation thereto. A small forwardly extending annular rib 113 protrudes forwardly from the bellows radial step 106 toward the O-ring 105 to prevent rearward escape of the O-ring 105 from the space between the axially extending flanges 102 and 103, in the event of slight axial shifting of the bellows 101 and bellows housing 104 away from each other.

The above mentioned radially inward extending ribs 111 of the handpiece housing 11 snugly axially oppose and sandwich therebetween the bellows radial step 106 and bellows housing radial flange 112 to positively prevent axial separation of the bellows 101 from the bellows housing 104, when the pump unit 100 is installed in the housing 11.

The above-mentioned bellows wall 114 extends rearward from the inner periphery of the radially extending annular step 106 of the bellows 101 (FIG. 18) and consists of an axially collapsible and extensible, flexible, wave cross-section, peripheral wall 114. The bellows wall 114 surrounds an axially expansible and contractible pumping chamber 115. At the rear end of the bellows 101, a radially extending drive end wall

116 closes the rear end of the bellows wall 114 and pumping chamber 115. A stub 120, having a radially enlarged head 121, is fixed to and extends coaxially rearwardly from the drive end wall 116.

To axially reciprocatingly drive (repetitively axially contract and expand) the bellows 101, the above discussed link member 51 (FIG. 5) of the drive unit 25 has its fork 71 provided with a central, radially opening, generally U-shaped slot 122 (FIGS. 11–13). The slot 122 divides the fork 71 into a pair of tines 123 (FIG. 11). The slot 122 opens leftwardly in FIG. 2, namely away from the rightward housing part 15 and toward the leftward housing part 14. Thus, with the drive unit 25 located in the right housing part 12 as seen in FIG. 3, the pump unit 100 can be inserted into the rightward housing part 15, with the stub 120 (FIG. 18) inserted in the slot 122 of the fork 71 (FIG. 11) so as to trap the tines 123 axially between the drive end wall 116 and head 121 of the bellows 101, as generally indicated in FIGS. 3 and 4. To prevent the bellows stub 120 from accidentally radially escaping out the open end of the slot 122 in the fork 71, the central portion 124 (FIG. 11) of the slot 122 is undercut by inward tapering of an intermediate portion 125 of the slot 122 as seen in FIG. 11. The tapered portion 125 of the slot 122 (FIG. 11) defines a snap fit detente for resiliently trapping the bellows stub 120 in the drive unit slot 122. Thus, to install the bellows stub 120 in the slot 122, the bellows stub 120 must be resiliently forced through the tapered portion 125 of the slot 122 and upon passing the latter, the stub resiliently snaps into the central portion 124 of the slot. The inner ends of the tapered portion 125 of the slot resiliently maintain the stub radially inboard thereof, in the central portion 124 of the slot 122.

The stub **120** and hence the bellows **101**, and indeed the entire pump unit **100**, is thus freely rotatable about its length axis with respect to the fork **71**, so that the circumferential orientation of the drive unit **25** and the pump unit **100** is determined by the location thereof in the housing. The drive unit **25** and pump unit **100** are thus, to an extent, free to circumferentially float with respect to each other, about the connection of the stub **120** and fork **71**, without interfering with the circumferential location of the drive unit **25** and pump unit **100** in the housing **11**. Further, the edges of the slot **122**, in particular of the central portion **124** thereof, are rounded in cross-section, as is the stub **120**, to permit a modest amount of angular adjustment between the length axes MA and LA of the drive unit **25** and pump unit **100** and to allow the drive unit **25** and pump unit **100** to easily settle into their proper operating positions in the housing **11**.

A cylindrical plug **126** is coaxially fixed to the interior side (left side in FIG. **18**) of the bellows drive end wall **116** by a coaxial, rearward extending, undercut pin **127** snap fitted in a forwardly (leftwardly in FIG. **18**) opening recess in the stub **120**. The plug **126** has a diametral slot **130** opening forward from its front end and which faces forward toward a resilient valve member **131** (FIGS. **16** and **18**) to maintain liquid communication between the central and radially outer portions of the pumping chamber **115**.

The bellows **101** is thus a single element which carries out four different functions, namely sealing at the forward end, changing the pump chamber size in the middle thereof, the rearend acts as a piston and as a drive point. In addition, the front annular flange **102**

helps locate the pump unit with respect to the housing barrel.

The pump unit **100** further includes a valve member **131**, which is a one piece member of suitable resilient material and which by itself constitutes the entire moveable inlet and outlet valve system for the pump unit **100**. More particularly, the valve member **131** comprises a short tubular central portion **132** (FIG. 18) which coaxially connects a forward (leftward in FIG. 18) tapering, duck bill type, outlet valve **133** and a rearwardly and radially outwardly extending umbrella type, inlet valve **134**. The umbrella valve **134** is annular and has a central opening **135** which communicates coaxially from the pumping chamber **115** in the bellows **101** forwardly through the tubular central portion **132** and outlet duck bill valve **133** of the valve member **131**.

The bellows housing **104** comprises a rear (right in FIGS. 18 and 18C) facing recess having a perimeter defined by the annular flange **103** of the bellows housing **104** and a rear facing radial wall **136** which defines the front end of the pumping chamber **115**. The umbrella valve **134** lies coaxially in the resulting recess **103, 136**. The forward facing perimeter **137** of the umbrella valve **134**, in its closed condition shown in FIGS. 18 and 18C, presses forward against the radial wall **136** to seal thereagainst. The valve member **131** is held against the right (rearward) movement away from the bellows housing wall **136** by axial interference between a rightward facing, radially outward extending, annular step **140** (FIG. 18C) at the rear (right) end of the duck bill valve **133**, and a radially inward extending, leftward facing, annular flange **141** of the bellows housing **104**. The radially inward di-

rected, annular flange **141** is axially interposed between, and forms a port **142** between, the rear facing recess **103, 136** and a coaxial, forwardly extending, cylindrical, irrigation liquid outlet, discharge, conduit **143** (FIGS. **18** and **18C**). The tubular central portion **132** of the valve member **131** extends snugly axially through the port **142**.

To install the valve member **131** in the bellows housing **104**, the tapered outlet duck bill valve **133** is pushed forward through the port **142**, the bellows valve step **140** snaps forwardly (leftwardly in FIG. **18C**) past the bellows housing flange **141**, and the sealing perimeter **137** of the umbrella valve **134** is thereby pulled forwardly resiliently against the rearward facing bellows housing wall **136**, leaving the valve member **131** with its duck bill valve **133** and umbrella valve **134** both in their closed condition shown in FIGS. **18** and **18C**.

The bellows housing **104** further includes an annular liquid jacket **144** (FIGS. **18** and **18C**) surrounding the rear portion of the liquid outlet conduit **143** and defining radially therebetween an annular liquid inlet chamber **145** (FIGS. **18, 18C** and **19**). The inlet chamber **145** communicates between a radial inlet port **146** (FIGS. **16** and **19**), which opens radially outward through the side of the bellows housing **104**, and an annular space **147** (FIG. **18C**). The annular space **147** is bounded by the forward face **150** and tubular central portion **132** and sealing perimeter **137** of the umbrella valve **134** and the radial face **136** of the recess **103, 136** of the bellows housing **104**.

Thus, a rightward pullback of the bellows head **121** axially expands the bellows, from its FIG. **18A** posi-

tion towards its FIG. 18 position. This reduces the pressure within the bellows. This in turn keeps the duck bill valve 133 closed and pulls the sealing perimeter 137 of the umbrella valve 134 rightwardly away from the bellows housing recess radial wall 136 and draws liquid from the port 146 through the annular inlet chamber 145, around the perimeter 137 of the open umbrella valve and into the interior of bellows.

On the other hand, a leftward push forward of the bellows head 121 axially compresses the bellows from its FIG. 18 position toward its FIG. 18B position and raises the pressure in the bellows, to close the umbrella valve 134 and open the duck bill valve 133 and force a pulse of liquid out of the bellows forwardly through the duck bill valve 133 and liquid outlet conduit 143.

Irrigation liquid is drawn to the inlet port 146 of the bellows housing 104 through an elbow 151 (FIG. 19). The outlet end 152 of the elbow and the inlet port 146 are cylindrical, with the elbow outlet end 152 being a snug axially sliding fit in the inlet port 146. An axially elongate, annular groove 153 in the outer periphery of the elbow outlet 152 houses a seal ring, here an O-ring, 154 which bears sealing and rollingly on the radially opposed and surrounding surface of the inlet port 146 to prevent liquid leakage out of the elbow 151 at its interface with the inlet port 146. The elbow 151 is not mechanically interlocked with the inlet port 146 but can slide in and out with respect thereto. The elbow 151 is held in place with its outlet end 152 sealingly within the port 146 by bearing of a portion 155 (FIG. 4) of the handpiece housing barrel 13 against the outboard surface 156 of the elbow 151, with the pump unit installed in the handpiece housing

11. The elbow 151 here fixedly carries a pair of parallel fins 157 (FIGS. 16, 17 and 19). The fins 157 extend radially from the rear inlet end portion of the elbow 151 and axially sandwich therebetween the flanges 106 and 112 of the bellows 101 and bellows housing 104, at least to help the housing ribs 111 (FIG. 18) fins 157 prevent axial separation of the bellows and bellows housing. The housing ribs 111 and fins 157 are more or less evenly circumferentially located around the bellows 101 and bellows housing 104.

An elongate flexible irrigation liquid supply hose 160 (FIGS. 2, 4, 16, 17, 19, 22, 23, 25 and 29) has a forward end 161 which telescopes sealing and fixedly over the rear end 162 of the elbow 151 as seen in FIGS. 19 and 29. Although an annular barb is shown at 162 (for example in FIG. 19) a barbless, cylindrical end 162 is satisfactory. In the assembled handpiece, the irrigation liquid hose 160 extends rearward from the elbow 151 (FIG. 4) in the barrel 13 of the housing and angles downwardly and rearwardly along the bottom of the handpiece handle 12 to exit rearwardly and downwardly through a hole 163 (FIG. 2) in the bottom end wall 164 of the handpiece housing 11. A clamp plate 165 (FIGS. 2, 3 and 4) of bent cross-section has a perimeter groove 166 for receiving the edges of the hole 163 in the housing bottom end wall 164, such that the clamp plate 165 is trapped in and partly closes the hole 163 in the bottom end 164 of the housing handle 12 when the housing is fully assembled. A notch 167 (FIG. 2) in the rightward end of the clamp plate 165 permits exit therethrough of irrigation liquid supply hose 160 from the handpiece housing 11 and snugly and frictionally grips such hose, without crushing or collapsing it, so that such hose 160 cannot easily be pulled out of the housing 11 or off the elbow 151.

The irrigation liquid hose 160, the inlet line, integrally therewith, a smaller diameter rib 170 (FIGS. 2, 16, and 17) A plurality (here three) insulated electrical conductors (wires) 171 have intermediate portions contained within and extending the length of the rib 170. Forward end portions of the insulated wires 171 emerge from the forward end of the rib 170 and carry conventional electrically conductive connectors 175. The forward end of rib extend through the notch 167 (FIG. 2) and ends just inside the bottom portion of the handle of the housing 11, as seen in FIG. 4. The forward ends of the conductors, carrying the connectors 175, extend into the lower portion of the handpiece handle 12. Thus, as apparent from the below description, rib 170 functions as a cable through which conductors 171 extend from the battery pack to the handpiece housing 11.

The insulated electrical conductors 171 extend along the length of the central portion of the liquid supply hose 160 and have rear ends provided with respective electrically conductive connectors 176 (FIGS. 22 and 29), such that electric current can flow from a given rear connector 176 through its corresponding insulated electrical conductor 171 and to its corresponding front electrically conductive connector 175 in a conventional manner. Short rear portions of the conductors 171 are loose and moveable with respect to the liquid supply hose 160 as seen in FIGS. 22 and 29.

The electrical connectors 175 and 176 are conventional crimp type connectors.

Instead of being molded in or otherwise constrained within the generally circular cross section rib 170 in FIG. 2, the elongate central portion of the insu-

lated electrical conductors 171 may be fixed side by side, in a flat array, to the outside of the liquid hose 160, as shown in FIGS. 22 and 29, and such can be accomplished by adhesive bonding or by any other convenient means.

The hose 160, 170 thus serves the dual use of conveying both irrigation liquid and electric operating power.

The length of the central portion of the liquid hose 160, to which the insulated conductors 170 are fixed, preferably extends several feet (for example 8 to 10 feet) from the handpiece 10. The rear end 177 (FIGS. 22 and 23) of the liquid hose is here provided with a fitting 180 of hollow tubular construction open to axial liquid flow therethrough. The fitting 180 comprises a forward end portion 181 (FIG. 23) fixed sealingly telescoped in the rear end 177 of the liquid hose 160, a square central flange 182 (FIG. 22) and a rear end portion (or "spike") 183 having a sharpened tip 184. The tip 184 is capable of conventional insertion into a conventional source S (FIG. 22) of irrigation liquid, for example a conventional supply bag, for conveying irrigation liquid therefrom forward into the hose 160. The square flange 182 prevents rotation of the fitting 180 in the casing 191, which helps when removing the spike 183 from the liquid supply bag. In the embodiment shown, the rear end portion 183 is covered by a protective cap 185 prior to use so that the sharpened tip 184 will not accidentally be dulled.

Thus, the length of the liquid supply hose 160 allows the irrigation liquid source S to be located at a distance from the handpiece and thus out of the way

of the surgical personnel at the operating table where the handpiece **10** is to be used.

Electrical Power Supply Unit

To provide operating electrical power to the motor **36**, a compact, self contained electrical supply unit **190**, a battery pack, (FIGS. **20–25** is fixed on the rear portion of the liquid hose **160**. The power supply unit is thus located remotely from the handpiece **10**, adjacent to the source S of irrigation liquid.

The power supply unit **190** comprises a casing **191** preferably of rigid molded plastics material. The casing **191** here comprises a relatively deep, substantially rectangular pan **192** (FIG. **2**) whose top (as oriented in FIGS. **22** and **23**) is fixedly closed by a cover **193**. The pan **192** has front and rear end walls **194** and **195** (FIGS. **23**, **23A** and **24**) having fixed upward opening slots **200** each defined by a laterally spaced, opposed pair of U-shaped flanges **201** (FIGS. **23A** and **23B**). The slots **200** are undercut in that each has a mouth **202** laterally narrower than the remainder of the slot **200** and communicating between the remainder of the slot **200** and the interior cavity of the pan **192**. The undercut slots **200** are of constant cross-sectional size and shape vertically (i.e. into and out of the page in FIG. **24** and up and down in FIG. **23**).

For convenient reference in the drawings, the reference numerals **200** and **201** are suffixed, so that the undercut slots and U-shaped flanges on the front pan wall **194** are indicated by the reference characters **200F** and **201F** and the undercut slots and U-shaped flanges on the rear pan wall **195** are indicated at 200R and 201R.

The U-shaped flanges **201F** defining the slots **200F** on the forward end wall **194** start substantially from the pan bottom wall **196** and extend a bit less than half way up the front end wall **194**.

On the other hand, the U-shaped flanges **201R** of the slots **200R** on the rearward end wall **195** of the pan are spaced above the bottom wall **196** of the pan upon respective block-like pillars **203** which define an up-facing bottom **204** for each of the U-shaped flanges **201R** on the rear pan wall **195**.

Rising from bottom wall **196** of the pan between the two central pillars **203** to a height below the bottoms **204** of the slots **200R** thereof, is a central block **205** from which forwardly extends, along the pan bottom wall **196**, a T-shaped flange **206** (FIG. **23B**) of constant cross section vertically and defining a pair of vertically open and laterally oppositely opening grooves **207** disposed immediately forward from the two central pillars **203** on the rear pan wall **195**.

Two such undercut slots **200F** are spaced symmetrically side by side on the front pan wall **194**. Similarly, and at the same effective lateral spacing, two such slots **200R** are spaced laterally side by side on the pan rear wall **195**.

Springy, electrically conductive sheet metal battery contacts of three different kinds are indicated at **210** and **211** and **212** and FIGS. **26**, **27** and **28** respectively.

A pair of such contacts **210** are provided and each comprises a generally rectangular foot **213** adapted to snugly slide down into a respective undercut slot **200F**

at the pan front wall **194**. Each foot **213** is provided with resilient toes **214** angled out of the plane of the foot **213** and adapted to bite against the interior of the corresponding undercut slot **200F** to fix the corresponding battery contact **210** in place therein.

Similarly, each of a pair of battery contacts **212** (FIG. **28**) has a resilient fork-shaped foot **215** adapted to fit snugly and slidingly down into the corresponding undercut groove **200R** at the rear wall **195** of the pan **192** and with springy toes **216** for fixedly gripping the interior of the corresponding undercut slot **200R**.

In a generally similar manner the single, low speed battery contact **211** (FIG. **27**) has a resilient U-shaped foot **217** for sliding down over the T-shaped flange **206** (FIG. **23B**), with springy toes **218** bent out of the plane of the foot **217** for bitingly engaging the walls of the grooves **207** of the T-shaped flange **206**.

Each of the battery contacts **210**, **211** and **212** thus slides with its corresponding foot into the desired location with respect to the grooves **200F**, **200R** and **207** and locks fixedly therein. This is generally indicated in FIGS. **22–24**. The battery contacts **210**, **211** and **212** have respective resilient fingers **221**, **222** and **223** (FIGS. **26**, **27** and **28** respectively), two each for the battery contacts **210** and **211** and one each for the battery contacts **212**. Such fingers **221**, **222** and **223** protrude from the respective slots **200F**, **200R** and **207** into the interior of the pan **192** for electrically contacting batteries **230** (FIG. **22**) to be housed in the pan **192**. Further, the battery contact **211** and each of the battery contacts **212** (FIGS. **27** and **28** respectively) have an upstanding terminal (**224** and **225** respectively) of simple rectangular shape for releasable tele-

scoped engagement within a respective one of the connectors **176** at the rear ends of the three insulated electrical conductors **171** (FIG. **22**).

Turning now to the arrangement of the batteries **230** within the pan **192**, one embodiment according to the invention advantageously uses batteries of a kind widely available in retail stores, namely AA size alkaline batteries. In addition to their wide availability to the public, these batteries advantageously are inexpensive, have a long shelf life and provide full operating voltage until almost fully discharged. In the embodiment shown, eight such batteries **230** are provided and are individually indicated at **B1**, **B2**, **B3**, **B4**, **B5**, **B6**, **B7** and **B8**. As shown in FIGS. **22–24**, ribs **231** extending circumferentially within the pan **192** cradle the batteries **230** fixedly but removably within the pan **192**. The polarity of the eight batteries is indicated by "plus" signs marked thereon. As seen in the drawings, the batteries **230** are arranged in four rows of two head-to-tail batteries each. Four of the batteries **230** lie in the bottom (FIGS. **22** and **23**) of the pan in two rows of two each and the remaining four batteries **230** lie on top of those.

The ends of the battery rows bear variously on the above discussed battery contacts **210**, **211** and **212** as generally indicated for example in FIG. **22** and also in the schematic circuit drawing in FIG. **22A**. More particularly, the four batteries **B1**, **B2**, **B3** and **B4** defining a vertical plane nearest to the viewer in FIG. **23** are connected in series from the near connector **212** leftwardly through the top row of batteries, down through the near upstanding connector **210** and thence rightwardly through the bottom pair of batteries to the lower rear connector **211**. The remaining

four batteries **B5–B8** are arranged in a vertical plane behind above-mentioned batteries **B1–B4**. More particularly, the batteries **B5–B8** connect in series from the far side of the lower rear connector **211** forwardly (leftwardly in FIG. **22**) to the far connector **210**, upwardly therethrough, and then rearwardly back to the far upper connector **212**.

The cover **193** (FIGS. **23** and **25**) has plural, laterally extending, depending ribs **232** (FIGS. **23** and **25**) intended to seat upon the uppermost batteries **B1, B2, B7** and **B8** and fix the batteries **B1–B8** in the pan with the cover **193** fixed in its normal closed position atop the pan **192**. The cover is fixedly securable atop the pan by any convenient means, such as snap fit connectors, a portion of which are generally shown in **233** in FIG. **22**, and generally like those discussed above with respect to the handpiece housing **11**, as at **16**, and as generally discussed with respect to the drive unit shell **26**, as at **32, 33**.

The aforementioned rear end **177** of the hose **160** extends through the casing **191** along the horizontal parting plane between the pan **192** and cover **193**, and so lies close adjacent the topmost batteries **B1, B2, B7** and **B8**.

Hollow front and rear bosses **234** and **235** (FIGS. **23** and **25**) extend forward and rearward respectively, from the casing **191**. At the parting plane between the pan **192** and cover **193**, the bosses **234** and **235** are notched (for example at **236** in FIG. **22**) for extension therethrough of the rear end **177** of the liquid hose **160**. The rear hollow boss **235** is sized and shaped to receive radially therein the square flange **182** (FIG. **23**) on the rear end of the liquid hose **160**, and thereby

axially fix the rear end of the liquid supply hose **160** within the casing **191** and nonrotatably fix the fitting **180** to the battery casing **191**. The notch **236** in the front boss portion **234** on the cover **193** is indented by one or more small recesses **237** for receiving axially therethrough the rib **170** containing the insulated electrical conductors **171**, whose rear end connectors **176** are respectively fixed to the terminals **224** and **225** of the battery contacts **211** and **212**.

Trigger Unit

The handpiece **10** further includes a trigger unit **240** (FIGS. **2–4**) for controlling actuation of the motor **36** and, by extension, pump unit **100**. The trigger unit **240** comprises a generally L-shaped trigger member **241** (FIGS. **2**, **4** and **4A**), that functions as a control switch, and that comprises an elongate trigger lever **242**. The upper, forward (leftward in FIGS. **2** and **4**) end of the trigger lever is pivoted by laterally extending integral pins **243** pivotally receivable in suitable holes in laterally opposed bosses (one of which is shown in FIG. **2**) in the opposed lower edges of the housing parts **14** and **15**, near the rear end of the barrel **13**. Snapping together of the two housing parts **14** and **15** thus captures the pivot pins **243** and pivotally mounts the trigger with respect to the handpiece housing.

The trigger lever **242** includes a transverse ridge **245** (FIG. **4**) near to but spaced rearwardly from the pivot pins **243** and facing the underside of the barrel **13** and adapted to bear on the underside thereof in the manner of a fulcrum. By far the major length **246** of the trigger lever **242** is to the rear (right in FIG. **4**) of the fulcrum ridge **245**. This rearward trigger part **246**

is relatively rigid in the portion thereof spaced at least somewhat to the rear of the fulcrum ridge 245. Such rigidity is assisted by a forward facing longitudinal reinforcement rib 247 extending rearward along the front face of the trigger lever 242 from a point near the fulcrum ridge 245. The front of the trigger lever 242, to the rear of the fulcrum ridge 245 is, in the embodiment shown, provided with transversely extending ribs 248 to provide the user with a non-slip grip of the trigger lever 242.

The trigger lever 242 is bendable near the fulcrum ridge 245, both to the front and rear thereof, in a resilient manner. In this way, the resilience of the trigger lever tends to hold it in its forward, inactive position shown in FIG. 4, with the fulcrum ridge 245 bearing on the underside of the handpiece barrel 13. On the other hand, when the user grips the handle 12 and squeezes the trigger lever 245 toward it, in the direction indicated by the arrow TA in FIG. 4, the trigger lever bends in the region of the fulcrum ridge 245, tending to straighten from its relaxed convexly forwardly curved configuration of FIG. 4, so that the rear face of the trigger lever can be pulled into the dotted line position 242P, substantially against the front face of the handle 12. Upon release of the trigger by the user, the natural resilience of the trigger lever 242 unbends it back to its solid line forward position shown in FIG. 4. Accordingly, the trigger naturally returns forward to its non-operative position without need for a separate return spring.

The trigger arm 251 fixedly carries a thumb 250 (FIG. 4A) intermediate it ends in the housing handle 15 and which interferes with the housing wall adjacent the hole 252, to prevent the resilient restoring force of

the trigger lever 242 from pulling the trigger arm 251 leftwardly (FIG. 4A) out of the housing handle 12.

A plank-like switch contact support arm 251 (FIGS. 2, 4 and 4A) protrudes substantially at a right angle from the rear, or bottom, end of the trigger lever 242 and extends upwardly and rearwardly (in FIG. 4) into the lower portion of the handle 12, loosely through a hole 252 (FIG. 4A) in the opposing bottom wall of the handle. A plate-like electrically conductive contact blade 253 fixedly extends through the thickness of the arm 251, and has a front portion exposed towards said motor and a rear portion exposed toward the bottom end 164 of the handpiece handle.

A pair of rectangular posts 255 and 256 protrude fixedly into the interior of the handle 12 from the inside of the right housing part 15, about midway between the drive unit 25 and the housing bottom end 164 (FIGS. 4A and 4B). Each post 255 and 256 includes a T-shaped flange 260 extending substantially forward toward the drive unit 25. Each T-shaped flange 260 defines a pair of oppositely facing grooves 261 (FIG. 4C).

Electrically conductive, spring-like metal contacts 262 and 263 (FIGS. 4A and 4C) each have a substantially U-shaped foot 264 for reception on the T-shaped flange 260 of the corresponding posts 255 and 256. The contacts 262 and 263 further each have a substantially rectangular, projecting terminal 265 for telescopic fixing thereon, in electrically connected relation, a corresponding one of the front connectors 175 of the three insulated electrical conductors 171. The electrical contacts 262 and 263 further have respective, generally L-shaped, plate-like, flexible contact

leaves 266 and 267 (FIG. 4C). The contact leaves 266 and 267 extend toward the drive unit 25 as seen in FIG. 4A.

Protruding rearwardly from the motor 36 are a pair of electrically conductive contacts 270 and 271 (FIGS. 4A and 9). The contact 271 is a conventional terminal (like those at 224, 225 and 265) for receiving one of the front connectors 175 in fixed and electrically conductive relation thereon.

In contrast, the contact 270 is an elongate, springy rectangular piece, bent intermediate its ends in dog-leg fashion, and angling from the rear end of the motor 36 rearwardly and somewhat rightwardly (in FIG. 4A) to a free end portion spaced near the contact leaves 266 and 267.

Gradual pressing of the trigger lever 242 toward the handle housing (rightwardly in FIGS. 4 and 4A) moves the arm 251 and hence the contact blade 253 progressively further into the handle 12 through a series of positions, three of which are indicated in broken lines at 253A, 253B and 253C in FIG. 4A.

The free (rightward in FIG. 4A) end of the arm 251 is beveled at 272 to help it ride over the contacts 266 and 267 as the trigger lever 242 is sequentially squeezed more and more toward the handle 12. The arm 251 is progressively resiliently bent, like a leaf-spring, as its free end rides over the fixed contacts 266 and 267, to firmly press its contact blade 253 against the latter.

Thus, as the trigger lever 242 is pressed toward the handle 12, the beveled free end of the arm 251

rides over the contact leaf **266** past its dotted line position **253A** and toward its dotted line position **253B**. As the free arm end approaches position **253B**, the contact blade **253** slides into electrical contact with the contact leaf **266** and the motor contact **270** to establish electrical connection therebetween. The motor contact **270** resiliently bends to allow continued travel of the contact blade **253** and arm **251** further into the handle, as indicated in dotted line at **270B**, and to press firmly against the contact blade **253**. Given only a light pull on the trigger lever **242**, the arm **251** and contact blade **253** tend to stop in the position indicated in dotted lines at **253B**, by reason of the free end of the arm **251** colliding with the contact leaf **267**. In this "B" position, electric current is fed to the motor **36** only from half the battery collection, namely batteries **B1**, **B2**, **B3** and **B4** in FIG. **22A**. The motor **36** thus runs at only a preselected fraction of its full speed and the pump unit **100** outputs irrigation liquid pulses at a desired frequency and amplitude, which are less than the maximum available. The apparatus is thus operated in its low output mode. The colliding of the free end of the trigger arm **251** with the contact leaf **267** gives tactile feedback to the user, that the low output mode of the handpiece has been selected.

Further pulling in of the trigger lever **242** by the user causes the beveled free end of the arm **251** to bend rightwardly (FIG. **4A**) the contact leaf **267** to a dotted line position indicated at **267C**, allowing the free end of the arm **251** to override the contact leaf **267**, such that the contact blade **253** moves into its "full-pull" dotted line position **253C** and further bends the motor contact **270** its dotted line position **270C**. In this final position, the contact blade **253** establishes electrical contact between the motor contact **270** and

the contact leaf **267**, thereby applying the full series voltage of all eight of the batteries **B1–B8** to the motor **36** to operate the latter at its full speed and thereby drive the pump unit **100** at its full output, namely to provide irrigation liquid pulses out of the pump unit **100** at maximum pulse amplitude and frequency.

When the user releases the trigger lever **242**, the resiliently bent trigger lever **242**, due to its inherent resilience, springs back from its fully pulled-in position indicated in broken lines at **242P**, to its solid line rest position indicated at **242** (FIG. **4A**). The electrical connection between the contact **262** or **263** and the contact **270** is broken.

Suction Hose

A flexible suction hose **280** (FIGS. **2** and **3**) is led along within the housing (within the lower part of the housing in FIG. **3**) past the drive unit **25** and pump unit **100**. The above-mentioned clamp plate **165** includes a tubular structure molded thereinto and defined by a forward nipple **282** in the handle **12** and, in coaxial fluid communicating relation therewith, a rearward nipple **283** which extends rearwardly out of the bottom end **164** of the handpiece handle **12**. The rear end portion **281** of the suction hose **280** is sealingly and fixedly telescoped over the front nipple **282**. A conventional flexible hose, not shown, is conventionally and sealing telescopable over the rear nipple **283** for connecting same to a conventional suction source, as schematically indicated at SS in FIG. **3**.

The front end portion **284** of the suction nose **280** is sealingly telescoped over a rearward opening nipple **285** on a short suction conduit **286** (FIGS. **2**, **3**, **16**, **17**

and 18). The suction conduit **286** (FIG. 18) is fixed side by side, in piggyback fashion, on the periphery of the irrigation liquid conduit **143** and hence is a part of (preferably an integral plastic molded part of) the bellows housing **104**.

The clamp plate **165** serves several purposes. It provides a suction hose connection, bears on the irrigation liquid hose where it enters the handpiece housing, and helps align the rear (rightward in FIG. 4) end wall portions of the housing halves as they are assembled together, and in so doing, is itself fixed on the housing. In addition, the clamp plate **165** is of one piece, preferably a plastic molding, and is partially recessed into the handpiece so that it does not make the handpiece look any bigger.

Tip Unit

A tip unit **291** (FIGS. 8, 8A and 8B) is releasably fixable on the front end of the handpiece **10** and extends forward therefrom for applying irrigation liquid pulses and/or suction to a surgical site indicated schematically at SU in FIGS. 8 and 8B. The tip unit **291** (FIG. 8) comprises a coupling **292**, a front cover **293** fixed to the front of the coupling **292**, and an elongate hollow wand **294** extending forwardly from the coupling and front cover for aiming at a surgical site SU. The coupling **292**, cover **293** and wand **294** are preferably one piece molded plastic units. The wand **294** is preferably of clear plastics material.

The tip unit **291**, and more specifically the coupling **292**, is releasably fitted in fluid tight relation to the front of the bellows housing **104** of the pump unit **100** and is releasably latched within the open front end of

the handpiece housing barrel 13 as hereinafter discussed.

More particularly, the coupling 292 (FIG. 8) comprises a shallow, forward opening cup 295 having a flat base wall 296 from which forwardly extends a shallow peripheral wall 297, thereby defining a forward opening recess 300. Coaxial irrigation liquid nipples 301 and 302 extend fixing rearwardly and forwardly, respectively, from the base wall 296 and together define a coaxial bore 303 therethrough and through the base wall 296. The rear nipple 301 is snugly but slidably receivable rearwardly into the open front portion of the liquid outlet conduit 143 of the bellows housing 104. An O-ring 304 seats in an annular groove outward facing on the rear nipple 301 and sealingly engages the interior of the liquid outlet conduit 143 to prevent irrigation liquid leakage therebetween.

The wand 294 includes a coaxial, relatively small diameter, irrigation liquid outlet tube 305 which at its rear end is telescoped fixedly and sealingly within the bore 303 of the front and rear nipples 301 and 302 for receiving a pulsed flow of irrigation liquid from the irrigation liquid outlet conduit 143 of the bellows housing 104.

The coupling 292 further includes a suction nipple 306 fixedly extending rearward from the base wall 296 in spaced parallel relation with the irrigation liquid nipple 301. The suction nipple 306 is snugly insertable rearwardly coaxially into the front opening suction conduit 286 of the bellows housing 104. An O-ring 310 is axially sandwiched between the rear end of the suction nipple 306 and a front facing annular step 311 at

the rear end of the suction conduit 286 to prevent leakage therebetween.

The coupling 292 further includes a leaf spring-like, generally U-shaped latch arm 312 which extends rearward from the peripheral portion of the base wall 296, curves radially outwardly and forwardly, and extends forward past the front cover 293, in radially outwardly spaced relation from the wand 294. A wedge-shaped, transverse ridge 313 on the exterior base of the latch arm 312 is approximately centered between the front and rear ends of the latch arm. A circumferentially extending, radially inward protruding rib 314 (FIGS. 2, 3 and 8) on the interior face and at the open front end of the right housing part 15 (at the front end of the barrel 13) opposes the latch arm 312, immediately ahead of the ridge 313, with the tip unit 291 installed on the front end of the handpiece 10 as shown in FIG. 8. The ridge 313 has a front facing step which abuts interferingly with the housing rib 314 to releasably block removal of the tip unit from its installed condition shown in FIG. 8. To remove the tip unit from the front end of the handpiece, the user simply presses radially inward against the forward protruding end portion 315 of the springy latch arm 312, sufficient to radially inward displace the ridge 313 out of interfering relation with the rib 314 and thereby unlatch the tip unit from the front end of the handpiece. This allows forward removing the tip unit 291 from the open front end of the handpiece barrel 13 and removing of the irrigation liquid and suction nipples 301 and 306 from the liquid outlet conduit 143 and suction conduit 286 of the bellows housing 104.

The tip unit 291, or any alternative tip unit having a substantially identical coupling and front cover, can

be installed operatively on the front end of the handpiece **10** by inserting same into the open front end of the handpiece barrel **13** so that the nipples **301** and **306** enter the liquid and suction conduits **143** and **286** respectively, to their position shown in FIG. 8. During this installation, the forward facing slope of the wedge cross-section transverse ridge **313** slides rearwardly past the housing rib **314**, bending the springy latch arm **312** radially inward as generally indicated by the arrow L in FIG. 8, so that the wedge cross-section ridge **313** can snap rearwardly past the rib **314** at the open front end of the housing barrel **13**. Thus, the tip unit **314** can be slid axially into the front end of the barrel **13** and upon reaching its innermost position latches itself against unintended removal. In its installed condition of FIG. 8, the tip unit is substantially rigidly fixed with respect to the front end of the bellows housing **104** and hence with respect to the handpiece barrel **13**.

The front cover **293** (FIG. 8) comprises a plate **320** which extends radially of the wand **294** and of the length axes of the barrel **13** and the pump unit **100**. The peripheral shape of the plate **320** conforms to the cross-sectional shape of the front end of the barrel **13**, so that the perimeter of the plate **320** is substantially flush with the outer periphery of the open front end of the barrel **13**, and so that the plate **320** effectively covers the open front end of the barrel **13**. The peripheral shape of the plate **320** and cross-sectional shape of the front end of the barrel **13** in one embodiment is generally D-shaped, with a generally flat underside and a convexly curved top and sides. The plate **320** is not intended to seal the open front end of the barrel **13** and so need not tightly abut same. Since the peripheral wall **297** of the cup **295** fits easily within the

open front end of the barrel 13, the plate 320 extends radially outwardly beyond the cup 295, as seen in FIGS. 8, 8A and 8B.

The front cover 293 includes an annular flange 322 extending axially rearwardly therefrom, radially snugly into the cup 295 of the coupling 292 to bottom rearwardly and sealingly against a resilient gasket 321 which is disposed against the front face of the base wall 296 of the cup 295. Respective holes in the gasket 321 loosely surround the front nipple 302 and leave fully open the communication between the interior of the suction nipple 306 and the interior of the cup 295. The front cover 293 further includes a further annular flange 323 extending fixedly and forwardly from the plate 320 in coaxial alignment with the through hole 324 in the plate 320.

The rearward annular flange 322 of the front cover 293 is fixedly secured within the cup 295 of the coupling 292 by any convenient means, for example by snap fit connectors on the opposing faces of such flange 322 and the peripheral wall 297 of the cup 295. For example, the cup peripheral wall 297 may be provided with several circumferentially spaced rectangular holes 325 (FIGS. 8A and 8B) for snap fit reception therein of small radially outward extending protrusions schematically indicated at 326 on the outside of the rearward annular flange 322.

The wand 294 further includes a relatively large diameter elongate suction tube 330 (FIGS. 8A and 8B) which loosely coaxially surrounds the irrigation liquid outlet tube 305 (FIG. 8) and extends substantially to the front end of the latter. The rear end portion 331 of the suction tube 330 is radially enlarged to provide a

radially shallow, axially elongate flange protruding radially outward therefrom and which is axially trapped between the plate **320** and the gasket **321** backed by the base wall **296**. This serves to rigidly fix the suction tube **330** with respect to the coupling **292** and front cover **293**. A port **332** in the sidewall of the suction tube **330** near its rear end communicates with a loosely surrounding annular chamber **333** defined between the plate **320** and base wall **296** of the front cover **293** and coupling **292** respectively.

The front end of the irrigation liquid tube **305** is held coaxially fixed within the front end portion of the surrounding suction tube **330** by any convenient means, such as radial, circumferentially spaced, webs **334** (FIG. 8). Accordingly, with a tip unit **291**, of the general type above described, installed on the front end of the handpiece, as shown in FIG. 8, irrigation liquid pulses from the pump **100** pass forwardly within the liquid tube **305** and are projected from the front (left in FIG. 8) end thereof, as schematically indicated by the arrows PL. At the same time, liquid and particulate debris at the surgical site SU are drawn into the front (left in FIG. 8) end of the suction tube **330**, pass rearwardly along the length thereof, through the port **332** into the chamber **333** and rearwardly through the nipple **306** and suction nipple **285**.

With the exception of a few components such as the motor **44**, the various electrically conductive contacts, the elongate insulated conductors, the various seal rings (for example **105**, **154**, **304** and **310**, the gasket **321**, as well as the suction and irrigation liquid hoses, the remaining major components, while possibly manufacturable of a variety of materials, are economically manufacturable of available molded plastics materials.

For example, the valve member 131 may be of rubber or a synthetic substitute or similar resilient plastic. Similarly, the bellows 101 is preferably molded of a suitable resilient plastic material capable of the bellows expansion and contraction movements shown in the drawings. The trigger unit 240 and the latch arm 312, while of substantially rigid plastics material, are elastically bendable to the extent required to suit the present description. Similarly, components to be snap-fitted together are substantially rigid but have sufficient resilience to permit the required described snap fitting.

The present invention can be constructed at relatively low cost and is thus practically manufacturable as a disposable tool, both the handpiece 10 itself and the accompanying electric power supply unit 190 being disposable after use with a single surgery patient.

## OPERATION

The apparatus is quickly and easily assembled. The drive unit 25 (FIG. 12) is assembled by, in effect, "dropping in" elements in proper sequence into the right (lower in FIG. 12) shell 31 and covering same with the other shell 30. More particularly, output gear 60, face gear 54 and motor 36 (with attached pinion gear 53 and electric contacts 270 and 271) are "dropped" into their respective locations in the upturned shell part 31, in that sequence. The rectangular shaft 61, topped by the eccentric member 62, drops into the corresponding hole in the output gear 60 and the link member 51 drops onto the eccentric member. The other shell part 30 is then snap fitted over the filled shell part 31, completing the drive unit 25.

The pump unit **100** is assembled by coaxially telescoping together its elements shown in FIG. **18** and then plugging into the inlet port **146** (FIG. **19**) the elbow **151** with the O-ring **154** and hose **160** assembled thereon.

The stub **120** (FIG. **18**) of the drive unit **100** can then be snapped into the slot **122** of the drive unit fork **71** (FIG. **2**) to connect the drive unit **25** operatively to the pump unit **100**. The suction hose **280** can then be connected to the pump unit nipple **285** and to the nipple **282** on the clamp plate **165**. Thereafter, the two assemblies above described can be laid into the rightward (FIG. **2**) housing part **15** in the following order, namely liquid hose **160** (FIG. **4**), drive unit **25** and pump unit **100** (FIG. **3**) and, last, suction hose **280** and clamp plate **165**.

The trigger unit **240** is then placed, with its rightward (FIG. **2**) pivot stub **243** located in the corresponding boss **244** in the rightward housing part **15**, and its arm **251** inserted through the hole **252** (FIG. **4A**) into the interior of the handle portion of the rightward housing part **15**, as seen in FIGS. **4** and **4A**. The trigger arm **251** is "covered" by the rear portion **281** of the suction hose **280** in FIG. **3**. The electrical contacts **262** and **263** are placed on their respective posts **255** and **256** in the rear portion of the rightward housing part **15** and the three forward electrical connectors **175** are secured respectively to the mentioned contacts **262** and **263** and the motor contact **271** (FIG. **4A**). Thereafter, the leftward (FIG. **2**) housing part **14** can be snap fitted to the rightward housing part **15** to close same and enclose the above mentioned apparatus, shown in FIG. **3**, therein.

In the thus assembled handpiece, the drive unit is fixedly located by engagement of its drive axis bosses **84** and **85** (FIG. **5**) in corresponding bosses in the housing parts **14** and **15** (see for example at **96** in housing part **15** in FIG. **2**). Location of the drive unit **25** is assisted by the ribs **95** within the housing parts **14** and **15** and by snug resilient engagement of the drive unit **25** by the hoses **160** and **280** which flank it.

The drive unit shell **26** is configured to maintain the proper tolerances between meshing gears and related parts. Location of all the drive unit parts in the drive unit shell **26** reduces the need to maintain close tolerances in the larger and less specialized handle housing **11**. Even the housing tolerances, for locating the pump unit **100** with respect to the drive unit **25** in the housing **11**, need not be close since the bellows **101** are flexible enough to bend or otherwise distort to absorb minor mis-alignment or angulation of the reciprocation axis of the link member **51** with respect to the length axis of the pump unit **100**. Indeed, the ribs **95** in the housing **11** permit pivoting of the drive unit **25** about the axis of the bosses **96** to allow the drive unit **25** and pump unit **100** to settle into their own working relative orientation. Accordingly, the precision in the handpiece housing **11** can be concentrated in aspects of fitting together of the two housing halves.

The electric power supply unit **190** (FIG. **22**) is quickly and easily assembled. More particularly, the feet of the respective battery contacts **210**, **211**, **212** (FIGS. **26–28**) are slid downward into their respective grooves (FIGS. **23A** and **23B**) in the pan **192** (FIG. **22**) with their protruding toes resiliently gripping the sides of the grooves. The rear connectors **176** are con-

nected to the battery contact fingers 224 and 225 in the order shown in FIG. 22A. The batteries B1–B8 are then slipped down into the pan in the orientation shown in FIG. 22 and into electrically conductive engagement with the battery contacts 210, 211 and 212 indicated in FIG. 22A. The rear portion of the liquid hose 160 is laid atop the batteries as indicated in FIG. 23, with the square flange 182 nonrotatable in the boss 235, and the cover 193 is snap fitted atop the liquid hose 160 and battery filled pan 192, as shown in FIG. 23, to complete assembly of the power supply unit. The cap 185 is pressed onto the sharpened tip 184 to protect it prior to use.

The result is a disposable pulsed irrigation handpiece unit which is entirely self-contained, including its own power supply, and which is ready for use upon having its sharpened tip 184 plugged into a conventional irrigation liquid supply bag or the like, and a conventional manner.

It should be noted that virtually the entire handpiece 10 and power supply unit 190 can be assembled without need for any adhesives, the parts going together with friction or snap fits or, in the case of the joinder of the bellows housing 104 to the bellows 100 and elbow 151, by being held together by surrounding structure which in turn is snap fitted together. This greatly eases and speeds assembly. A minor exception is that the fitting 180 is here adhesively fixed to the hose 160.

To use the handpiece assembly in surgery, the cap 185 (FIG. 23) is removed from the pointed tip 183, which is then plugged into a standard output fitting on a conventional irrigation liquid supply bag. The

power supply unit **190**, being fixed to the rear end of the irrigation liquid hose **160**, can be allowed to simply hang from the irrigation liquid supply bag (not shown but schematically indicated at S in FIG. **22**). By providing a substantial length of irrigation liquid hose **160** (for example 10 feet), the liquid supply bag S and power supply unit **190** can be located well out of the way of the surgical team during use of the handpiece **10** at the surgical site. Even then, the power supply unit **190** is compact as compared to the adjacent conventional irrigational liquid supply bag (being very little larger than the eight conventional double AA batteries that it houses).

If suction will be desired at the surgical site, the handpiece nipple **283** (FIG. 3) can be connected by a conventional hose not shown to a conventional suction source SS (FIG. 3).

A variety of tip units **291** of differing characteristics (e.g. differing irrigation liquid spray patterns, etc.) may be made available for alternative mounting on the handpiece **10**. One example is shown in FIGS. 8, 8A and 8B.

In any event, the user selects a tip unit **291** having a wand **294** of desired configuration, and rearwardly inserts its coupling **292** into the front end of the handpiece **11**. More particularly, the nipples **301** and **306** of the tip unit are inserted coaxially rearwardly, in sealed relation (see FIG. 8) in the conduits **143** and **286** respectively of the bellows housing **104**. The resilient latch arm **312** enters the barrel **13** of the handpiece housing **11** adjacent to the bellows housing **104** until the plate **320** of the front cover **293** abuts the front end of the handpiece housing barrel **13**. In the

last part of this tip installation movement, the wedge shaped ridge **313** (FIG. 8) on the latch arm **312** snaps past the rib **314** of the housing barrel **13** to positively prevent forward removal of the tip unit from the handpiece.

To use the apparatus for irrigation of a surgical site, the user grips the handpiece, either by the handle **12**, in a pistol-like manner, or where the barrel **13** joins the handle **12**, in a wand like manner. In either position, the user has one or more fingers that can bear on and press inwardly the trigger lever **242** from its inoperative rest position shown in solid line in FIG. **4A** forward and through its low speed and high speed positions indicated in broken lines at **253B** and **253C** in FIG. **4A**. In the first operative position **253B**, the blade **253** connects the low speed (here six-volt) contact **266** to the motor contact **270**. On the other hand, in the fully depressed condition of the trigger, indicated at **253C**, the blade **253** connects the high speed, 12 volt contact **267** with the motor contact **270**. Accordingly, the user can select between "off", lower power pulsing and high power pulsing.

In one embodiment pump stroke was about ¼". In one embodiment shown, the motor speed was about 15,000 rpm and the speed reduction afforded by the transmission was about 15-1, providing the eccentric with about 1,000 rpm speed.

Depending on the flow resistance of the particular tip unit attached to the handpiece, the liquid pulse frequency may change. In one example, a handpiece according to the invention produced about 1200 pulses per minute, dispensing about 1600 ml per minute of irrigation liquid in about 1.3 ml liquid pulses. The pos-

itive drive of the pump unit by the drive unit and the location of the pump unit, near the front end of the barrel **13** and in direct engagement with the tip unit, provides liquid pulses at the output of the tip unit which have sharp rise and fall slopes. Thus, the relationship of liquid pulse amplitude to time approximates a square wave form, more so than for example, the aforementioned device of U.S. Pat. No. 5,046,486. Further, the force applied to the pulses by the present apparatus is higher (somewhat above one Newton) than in that prior art device, at the full power position of the trigger.

In one embodiment according to the invention, a tab **316** (FIGS. **1** and **8B**) extends forward from the front plate **320** of the front cover **293**, on the opposite side of the wand **294** from the latch arm **312**. To release the latch arm **312** from the housing **11**, the user can thus simply simultaneously grip with opposite fingers and pinch toward each other the latch arm **312** and tab **316**. In other words the tab **316** provides base toward which to pinch, or pull, the latch arm **312** to release the tip unit **291** from the handpiece **11**.

In the present invention, the liquid and suction nipples of the tip unit connect directly to the pump unit **100**, and do not contact any part of the handpiece housing **11**. Accordingly, neither the pump unit **100** nor tip unit **291** need fit with close tolerances the handpiece housing **11**. The connection of the tip unit to the handpiece housing is merely to latch the tip unit against loss from the handpiece housing and to casually cover the open front end of the handpiece housing. Accordingly, the liquid tight fit is between the nipples of the tip unit and conduits of the pump unit, not with the housing.

Although a particular preferred embodiment of the invention has been disclosed in detail for illustrative purposes, it will be recognized that variations or modifications of the disclosed apparatus, including the rearrangement of parts, lie within the scope of the present invention.

The invention claimed is:

1. A medical irrigator comprising:

a housing shaped to be hand held and having a front end;

an inlet tube extending to said housing;

a pulse pump capable of operating at a variable rate disposed in said housing and having an outlet conduit that opens to the housing front end, said pump configured to receive fluid from said inlet tube and discharging the fluid through said outlet conduit;

a single electric motor disposed in said housing and connected to said pump for actuating said pump, said motor operable at variable speeds to control the pumping rate of said pump;

a control assembly disposed in said housing to regulate the speed of said motor;

a suction tube disposed in said housing that has an open end adjacent the front end of said housing that extends away from the front end;

a battery pack separate from said housing; and

a flexible conductor assembly extending from said battery pack to said housing for supplying energy stored in said battery pack to said motor.

2. The medical irrigator of claim 1, wherein said control assembly has a switch that is moveably mounted to said housing, said control assembly configured so that:

when said switch is in a first position, said control assembly does not supply an energization signal to said motor;

when said switch is in a second position, said control assembly supplies a first energization signal from said battery pack to said motor; and

when said switch is in a third position, said control assembly supplies a second energization signal from said battery pack to said motor.

3. The medical irrigator of claim 2, wherein said switch is pivotally attached to said housing.

4. The medical irrigator of claim 3, wherein said switch is configured to move:

from the first position and to the second position; and

from the second position to the third position.

5. The medical irrigator of claim 2, wherein said switch is configured to move:

from the first position and to the second position; and

from the second position to the third position.

6. The medical irrigator of claim 1, wherein said pump is bellows pump.

7. The medical irrigator of claim 1, wherein said housing is formed to have: a handle; and a barrel integral with and located above said handle that extends forward from said handle, said barrel having the housing front end from which said pump discharges fluid and from which said suction tube extends.

8. The medical irrigator of claim 1, wherein said pump is a reciprocating pump.

9. The medical irrigator of claim 1, wherein said inlet tube extends from said battery pack to said housing.

10. A medical irrigator having:

a housing shaped to be hand held, said housing having a front face shaped to receive a medical/surgical tip assembly;

a discharge conduit disposed in said housing that opens into the front face of said housing and a suction tube that extends from the housing front face, both said discharge conduit and said suction tube being configured to be connected to separate conduits integral with the tip assembly;

an inlet line connected to said housing;

a pump disposed in said housing connected to receive fluid from said inlet line and pump fluid

out through said discharge conduit, said pump being a pulse pump that operates at a variable rate;

a single, variable speed electric motor in said housing that is connected to said pump that actuates said pump so as to regulate the pumping rate of said pump;

a conductor assembly including a plurality of flexible conductors, said conductor assembly having a distal end disposed in said housing and a proximal end spaced from said housing;

a battery pack separate from said housing, said battery pack attached to said conductors at the proximal end of said conductor assembly; and

a switch assembly mounted to said housing for selectively establishing a connection between at least one of said conductors and said motor, said switch assembly having a switch element moveably attached to said handle, said switch assembly being configured so that:

when said switch element is in a first position, said switch assembly does not supply an energization signal to said motor;

when said switch element is in a second position, said switch assembly supplies a first energization signal from said battery pack to said motor; and

when said switch element is in a third position, said switch assembly supplies a second energization signal from said battery pack to said motor.

11. The medical irrigator of claim 10, wherein said switch element is pivotally attached to said housing.

12. The medical irrigator of claim 10, wherein said switch element is configured to move:

from the first position and to the second position; and

from the second position to the third position.

13. The medical irrigator of claim 10, wherein:

said conductor assembly includes: a first conductor over which a first energization signal from said battery pack is supplied; and a second conductor over which a second energization signal from said battery pack is supplied; and

said switch assembly is configured so that:

when said switch element is in the second position, said switch assembly connects said first conductor to said motor; and

when said switch element is in the third position, said switch assembly connects said second conductor to said motor.

14. The medical irrigator of claim 10, wherein said switch assembly includes a single conductive member that is directly connected to said motor.

15. The medical irrigator of claim 10, wherein said pump is a bellows pump.

16. The medical irrigator of claim 10, wherein said switch element is pivotally attached to said housing.

17. The medical irrigator of claim 10, wherein said pump is a reciprocating pump.

18. The medical irrigator of claim 10, wherein said inlet tube extends from said battery pack to said housing.

19. The medical irrigator of claim 10, wherein:

said inlet line is a flexible hose that extends from outside said housing into said housing; and

said conductor assembly is attached to said hose so that at least a portion of said conductor assembly extends along said hose.

20. A medical irrigator comprising:

a housing shaped to have a front end;

a suction tube disposed in said housing having an inlet end that opens from the front end of said housing;

a pulse discharge pump that operates at a variable rate disposed in said housing having an inlet and discharge conduit, the discharge conduit opening towards the front end of said housing;

an inlet line that extends into said housing that is in fluid communication with the pump inlet;

a single electric motor disposed in said housing and connected to said pump to actuate said pump,

said motor operating at variable speeds to regulate the pumping rate of said pump;

a battery pack separate and spaced from said housing that contains at least one battery that stores energy for energizing said motor;

a flexible cable that extends from said battery pack to said housing for supplying energy from said battery pack to said motor; and

a control assembly integral with said housing, said control assembly having a switch member moveably mounted to said housing and said control assembly being configured to apply a variable energization signal from said battery pack to said motor so as to control the speed of said motor and regulate the pumping rate of said pump.

21. The medical irrigator of claim 20, wherein said control assembly is configured so that said switch member moves sequentially from a first position to a second position and from the second position to a third position and:

when said switch member is in the first position, the switch member does not establish a connection between said cable and said motor;

when said switch member is in the second position, the switch member establishes a connection between said cable and said motor to cause a first energization signal to be applied to said motor; and

when said switch member is in the third position, the switch member establishes a connection be-

tween said cable and said motor to cause a second energization signal to be applied to said motor.

22. The medical irrigator of claim 20, wherein:

said cable includes a first conductor over which a first energization signal is available from said battery pack and a second conductor over which a second energization signal is available from said battery pack; and

said control assembly is configured so that switch member can be selectively positioned to: connect neither of said cable conductors to said motor; connect the first said cable conductor to said motor; or connect the second said cable conductor to said motor.

23. The medical irrigator of claim 22, wherein said control assembly is configured to sequentially move from the position in which neither said cable conductors are connected to said motor to the position in which said first cable conductor is connected to said motor and to the position in which the second said cable conductor is connected to said motor.

24. The medical irrigator of claim 20, wherein said pump is a reciprocating pump.

25. The medical irrigator of claim 20, wherein said pump is a bellows pump.

26. The medical irrigator of claim 20, wherein said inlet line extends from said battery pack to said housing.

27. The medical irrigator of claim 20, wherein:

said inlet line is a flexible hose that extends from outside said housing into said housing; and

said cable is attached to said hose so that at least a portion of said cable extends along said hose.

28. A medical irrigator, said irrigator comprising:

a housing having a front face shaped to receive a medical tip assembly;

a pulse discharge pump that operates a variable rate, said pump having an inlet and an outlet, the outlet opening into the front face of said housing so as to be in fluid communication with a first conduit of the tip assembly;

a suction tube in said housing having an open end located adjacent the front face of said barrel so as to be in fluid communication with a second conduit of the tip assembly;

a single, variable speed electrical motor disposed in said housing connected to said pump for actuating said pump at variable rates;

a battery unit separate from said housing for supplying energy to said motor;

a control assembly mounted to said housing and connected to said battery unit and to said motor for supplying a variable potential energization signal to said motor, said control assembly having a single switch member that is moveably attached to said housing that selectively

makes/breaks a connection between said battery unit and said motor and establishes the potential of the energization signal supplied to said motor.

29. The medical irrigator of claim 28, wherein said control assembly is configured so that said switch member moves sequentially from a first position to a second position and from the second position to a third position and:

when said switch member is in the first position, the switch member does not establish a connection between said battery unit and said motor;

when said switch member is in the second position, the switch member establishes a connection between said battery unit and said motor to cause a first energization signal to be applied to said motor; and

when said switch member is in the third position, the switch member establishes a connection between said battery unit and said motor to cause a second energization signal to be applied to said motor.

30. The medical irrigator of claim 28, wherein said control assembly has a first contact over which a first energization signal is available from said battery unit and a second contact over which a second energization signal is available from said battery unit and said control assembly is configured so that said switch member can be selectively positioned to: connect neither of said contacts to said motor; connect the first said con-

tact to said motor; or connect the second said contact to said motor.

31. The medical irrigator of claim 30, wherein said control assembly contacts are statically mounted to said housing.

32. The medical irrigator of claim 30, wherein said control assembly is configured so that said switch member moves sequentially from:

a position in which no energization signal-supply contacts are connected to said motor to a position in which said first contact is connected to said motor; and

from the position in which said first contact is connected to said motor to a position in which said second contact is connected to said motor.

33. The medical irrigator of claim 28, wherein said pump is a reciprocating pump.

34. The medical irrigator of claim 28, wherein said pump is a bellows pump.

35. The medical irrigator of claim 28, wherein a flexible cable extends from said battery unit to said control assembly.

36. The medical irrigator of claim 28, wherein said housing includes a handle and a barrel that extends above and projects forward of said handle, said barrel having the front face of said housing.

37. The medical irrigator of claim 28, wherein:

a flexible hose extends from outside said housing into said housing through which fluid is supplied to the pump inlet; and

a flexible cable extends from said battery unit to said housing, said cable being connected to said control assembly and being attached to said hose so that at least a portion of said cable extends along said hose.

38. A medical irrigator, said irrigator comprising:

a housing having a front face shaped to receive a medical tip assembly;

a pulse discharge pump disposed in said housing that operates at a variable rate, said pump having an inlet and an outlet, the outlet opening into the front face of said housing so as to be in fluid communication with a first conduit of the tip assembly;

a suction tube in said housing having an open end located adjacent the front face of said housing so as to be in fluid communication with a second conduit of the tip assembly;

a single, variable speed electric motor disposed in said housing connected to said pump for actuating said pump at variable rates;

a battery pack separate from said housing containing at least one battery;

a flexible cable that extends from said battery pack to said housing, said flexible cable having at least one conductor over which an energization

signal from said at least one battery is supplied; and

a control assembly attached to said housing and connected between said at least one conductor and said motor for supplying a variable potential energization signal to said motor, said control assembly having a single switch member that is moveably attached to said housing that selectively makes/breaks a connection between said at least one conductor and said motor and that establishes the potential of the energization signal supplied to said motor.

39. The medical irrigator of claim 38, wherein said control assembly is configured so that said switch member moves sequentially from a first position to a second position and from the second position to a third position and:

when said switch member is in the first position, the switch member does not establish a connection between said at least one conductor and said motor;

when said switch member is in the second position, the switch member establishes a connection between said at least one conductor and said motor to cause a first energization signal to be applied to said motor; and

when said switch member is in the third position, the switch member establishes a connection between said at least one conductor and said motor to cause a second energization signal to be applied to said motor.

40. The medical irrigator of claim 38, wherein:

said cable has a first conductor over which a first energization signal is available from said at least one battery and a second conductor over which a second energization signal is available from said at least one battery; and

said control assembly is configured so that switch member can be selectively positioned to: connect neither of said cable conductors to said motor; connect the first said cable conductor to said motor; or connect the second said cable conductor to said motor.

41. The medical irrigator of claim 40, wherein said control assembly has a first contact to which said first cable conductor is attached and a second contact to which said second cable conductor is attached and said contacts are statically mounted to said housing.

42. The medical irrigator of claim 40, wherein said control assembly is configured so that said switch element moves sequentially from:

a position in which no energization signal-supplying conductors are connected to said motor to a position in which said first cable conductor is connected to said motor; and

from the position in which said first cable conductor is connected to said motor to a position in which said second cable conductor is connected to said motor.

43. The medical irrigator of claim 38, wherein an inlet hose extends from said battery pack to said

housing, said inlet hose being connected to the pump inlet.

44. The medical irrigator of claim 38, wherein said housing is shaped to have a handle and a barrel integral with said handle that is located above and projects forward of said handle.

45. The medical irrigator of claim 44, wherein said motor is disposed in said housing handle.

46. The medical irrigator of claim 38, wherein:

a flexible hose extends from outside said housing into said housing through which fluid is supplied to the pump inlet; and

said cable is attached to said hose so that at least a portion of said cable assembly extends along said hose.

* * * * *

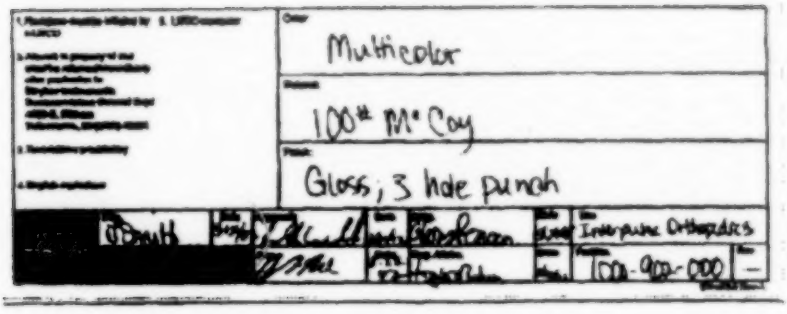
Multicolor
100# M° Coy
Gloss; 3 hole punch
Inter-pace Orthopedics

## Complete Ordering Information

**InterPulse** Battery Powered Irrigation

### InterPulse Handpiece

| [illegible] | [illegible] |
|---|---|
| [illegible] | [illegible] |

### Tips and Accessories

| [illegible] | [illegible] |
|---|---|
| [illegible] | [illegible] |

### InterPulse Handpiece, Rechargeable

| [illegible] | [illegible] |
|---|---|
| [illegible] | [illegible] |

[illegible]

stryker INSTRUMENTS

For more information, contact your local Stryker Sales Representative.

[illegible]

[illegible]

Power & Versatility Performance & Reliability

stryker INSTRUMENTS

# InterPulse

Battery Powered Irrigation

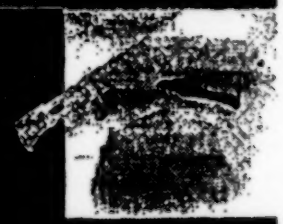

Orthopedics

Performance. Reliability. Versatility
Wound Care Replacement Tubing: Step-by-Step
Step-by-Step
Features/Benefits
Effective
Wound Debridement
Wound Tunneling
Advanced lig technology
& selection for your
Wound Care needs.

Consider a safe, simple,
and cost effective alternative. . .
SURGILAV
PLUS
stryker
INSTRUMENTS
PLAINTIFF'S
EXHIBIT

# Zimmer Inc.

*Business Case / Proforma*

# PulsaJet®

***Battery Powered Irrigation System***

***March 11, 1998***

***Zimmer Inc.***
***Business Case / Proforma***

**Project name: *PulsaJet*® Battery Powered Irrigation System**
**Prepared By: Carol Duvall, Product Manager; Tim Donaldson, Project Manager**
**Revision: 5**
**Date: March 11, 1998**

***Executive Summary:***

**Project Scope / Overview**

**Business Rationale**

*(A Major Program Should Be Described In 6 to 8 Paragraphs Which Outline A Brief History, The Current Situation And Recommended Future Action. It should Describe The Product and Associated Instruments, Provide An Overview Of Impact On Existing Products And A Macro View Of The Estimated Schedule. It Should Address; Is it An Extension Within an Existing Segment? Does It Involve A Developing Market? Why It's Required? It Should Describe Strategy And Basis Of All Assumptions Made in Developing Plan And Explain How It Will Fit Overall Corporate Strategic Objectives And What Are Probable Scenarios If We Don't Do This Project Or If Project Execution Varies From Plan?*

Zimmer Patient Care Division has been one of the leaders in the pulsatile lavage market since the release of the *Pulsavac*® Wound Debridement System in the mid 1980's. We have placed nearly 5,000 machines into this market. This market not only enjoys

lucrative hospital operating room business for total joint surgery, but other areas such as wound care, physical therapy, trauma (both in the emergency room and operating room), and even general surgery. We were able to establish ourselves as a leader because of the abilities of the *Pulsavac* System. These key features included: consistent performance, variable pressure, concurrent/concentric suction and irrigation, and a wide variety of debridement tips.

However, the market, especially the operating room market, has moved from more of a product performance sell to a convenience sell. There are a variety of factors influencing this shift in customer preference, such as limited space in the operating room and user convenience. The ability to quickly set-up a battery unit out weighed the high performance of a machine within certain hospitals.

Stryker, Inc. was the first company to capitalize on this with their disposable battery system, the Surgi-Lav-Plus. This product was able to take operating room business away from us over the past three years. Davol, Inc. now offers two battery units, the Simpulse Solo and Var-I-Care Systems. These battery powered systems, with their quick set-up and lack of capital equipment requirements have made a major impact on the market. They offer improved user convenience without providing the performance capabilities of our *Pulsavac* System.

To counter this attack, we are recommending the development of a product that offers the convenience of the various battery powered systems on the market with improved performance, reliability, and ergonomics. This new unit will allow us to gain a competitive

market share and assist us in meeting Patient Care's strategic goal of increasing sales in Wound Debridement. This new device will take the place of our current *Var-A-Pulse* unit which has meager market position in the operating room due to poor performance and product quality issues.

***Zimmer Inc.***
***Business Case/Proforma***

**Project name: *PulsaJet*® Battery Powered Irrigation System**
**Prepared By: Carol Duvall, Product Manager; Tim Donaldson, Project Manager**
**Revision: 5**
**Date: March 11, 1998**

- **The Current Product – *Var-A-Pulse***

Zimmer Patient Care Division attempted to compete in the disposable battery system market with the release of the *Var-A-Pulse* in March 1996. This is a product which was rushed to the market and has been dogged by reliability and functionality issues since its release. It is a poorly designed product with little thought given to ergonomics or user needs.

Since its release, many design changes directed at increasing reliability have been implemented. These changes appear to have been beneficial as complaints on reliability issues have been significantly reduced. Nevertheless, there are other concerns which remain. Specifically, these are: 1)poor flow rate, 2)ergonomically deficient, and 3)tips fall off during procedures.

Flow Rate: Attempts at improving the flow rate of the current design have been somewhat unsuccessful in lab testing. All relevant components have been optimized for this application. The *Var-A-Pulse* employs a very inefficient design for a battery powered pumping mechanism due to the high friction between mating and moving components. It is Product Development's belief that this mechanism cannot deliver the required performance characteristics with the current essential design constraints.

Ergonomics: It is doubtful that significant improvements in the ergonomics of the *Var-A-Pulse* can be achieved unless a complete redesign of the pumping mechanism is undertaken. This is because the internal placement of the vital components dictated the shape of the handgun. Ergonomics will be a key focal point of the *PulsaJet* because we feel this is an area where we can gain notable superiority over the competitive units. Even as clumsy and uncomfortable as the *Var-A-Pulse* is, some still consider it to have a better "feel" than either Stryker's or Davol's unit. When we design the *PulsaJet* system with the user needs as a vital characteristic, we may be able to make sales based on the ergonomic aspect alone.

Tip Attachment: Tips falling off of the gun has been a minor problem for ZPCD for years. There are "ears" attached to the handgun which are meant to introduce a more mechanical interference between the gun and tips. This method is inadequate, especially at the tolerance extremes. Moreover, the problem is amplified with the *Var-A-Pulse* because it does not have the ears to provide even minimal support. The addition of a true locking mechanism for tips is a crucial design input for the *PulsaJet*. The strategy is that af-

ter the design of the new locking mechanism is validated, it would be introduced across the *Pulsavac* line. To get a jump on the validation process, Product Development would like to propose the introduction of widespread use of the design, prior to the release of the *PulsaJet*, by integrating it on the *Var-A-Pulse* as soon as the design is complete. This would not only serve to improve the *Var-A-Pulse* in the interim, but will provide feedback on the design so we ensure that we "do it right the first time" on the *PulsaJet*.

***Zimmer Inc.***
***Business Case/Proforma***

**Project name: *PulsaJet*® Battery Powered Irrigation System**
**Prepared By: Carol Duvall, Product Manager; Tim Donaldson, Project Manager**
**Revision: 5**
**Date: March 11, 1998**

***Executive Summary:***

Assessing the costs required in resources, time, and dollars to complete an adequate redesign of the current product, it is seemingly not justified versus a design of a completely new system. It will cost only modestly more to introduce a new design that Zimmer can be proud of instead of one that we would like to put behind us.

- **The Proposed Product**

General Description:

The *PulsaJet* will be a dual speed, battery operated pulsatile wound irrigation/debridement device which will offer simultaneous aspiration. The device will be packaged with various tips for different applications. These tips will feature a unique attachment method to the *PulsaJet* unit which will ensure that they do not fall off during surgical procedures. The *PulsaJet* will be designed with performance, reliability, ergonomics, and cost in mind. These are the four areas which are most lacking in the current *Var-A-Pulse* device. The goal of this project is to design a device which will meet or beat the current competition in flow rate and perceived pressure at a lower cost than the current Var-A-Pulse unit and works properly every time it is used.

Marketing Requirements:

1. Single use, Disposable
2. Powered by batteries
3. Requires no capital equipment for use
4. Handgun design with pull-on activation
5. Must be able to lock in the "on" position during operation
6. Tips should attach to handgun with mechanical means
7. Pre-attached suction/irrigation tubing (12-15 ft long)
8. Two settings: High – Flow rate of 1200 ml/min, Low – approximately half of High setting
9. Pulsatile fluid delivery, 10 Hz minimum
10. Must be self priming
11. CE marked
12. Component kit target cost of $16.00; packaged and sterilized.

An additional input to be considered is the possibility of designing a tip which will allow this product to be used in physical therapy. This would be a high flow, low pressure tip that would allow for the treatment of chronic wounds. Total costs (including tooling) to add this tip would be approximately $15,000.

***Zimmer Inc.***
***Business Case/Proforma***

**Project name: *PulsaJet*® Battery Powered Irrigation System**
**Prepared By: Carol Duvall, Product Manager; Tim Donaldson, Project Manager**
**Revision: 5**
**Date: March 11, 1998**

***Executive Summary:***

- **The Strategy**

This product will be a nationwide release. Our primary target will be orthopaedics, Specifically total hip and knee procedures. The target audience will be current users of competitive systems such as Stryker's SurgiLav-Plus and Davol's Simpulse and Simpulse Solo Systems.

- **The Market**

The primary market focus for the *Pulsavac* System remains the orthopaedic surgeon involved with cementing a prosthesis, normally a knee or hip implant. The *Pulsavac* System serves to clean cancellous bone prior to cementing the prosthesis into place. The cleaning of the bone allows for a stronger bone to im-

plant bonding effect, which in turn facilitates a stronger implant fixation. This segment will continue to supply the *Pulsavac* System with its major users.

However, there are secondary market applications of the *Pulsavac* System, which include the ER/Trauma market, wound care market, and general O.R. procedures.

- **The Resources**

Required resources for this project are summarized in Appendix A of this document.

- **The Schedule**

The current project plan (Gantt Chart) indicates a launch date of May 1, 1999. This is the date that we can expect inventory quantities to be available to support continuous and uninterrupted sales. The Gantt Chart is attached to this document (Appendix B); however, some key milestones are summarized below.

4/6/98 - Officially Begin Development (Assumed Project Approved)
9/16/98 - Design of All Components Complete
1/6/99 - Tooling Complete
1/20/99 - Preproduction Pilot Run Begins
3/4/99 - Field Evaluations Begin
4/19/99 - Production Begins
6/1/99 - Product Launch Date

***Zimmer Inc.***
***Business Case / Proforma***

**Project name: *PulsaJet*® Battery Powered Irrigation System**

**Prepared By: Carol Duvall, Product Manager; Tim Donaldson, Project Manager**
**Revision: 5**
**Date: March 11, 1998**

***Executive Summary:***

- **The Risks**

In not developing this product we risk the loss of additional market share to competitors such as Stryker and Davol. We would be able to maintain share in our capital segment with those users who prefer the higher impact pressures associated with the capital equipment, however, with our focus on hips, knees, and trauma in the operating room, we have turned away from a lucrative market in nursing home chains. This will also have a negative impact on our capital equipment sales. The development of an improved battery system will allow us the opportunity to increase our share within the operating room through the use of a totally disposable system.

This past January, Stryker released what they are claiming to be an improved version of their battery powered unit. To this point, word that we are receiving from the field indicates that no major innovations have been made to the product; however, the color has changed and the tip attachment has improved. Just the fact that they have made improvements indicates that they are not standing still with their product line.

- **The Business Impact**

Sales projections have been provided (page 12) based on maintaining our current battery-powered

product, the *Var-A-Pulse*, with no changes made to the design. We would have difficulty maintaining sales and our capital sales will decrease based on market moves towards disposable products. Moderate changes to the current design (lock on for tips, trigger change) would not be significant enough to allow us a strong market position in the disposable market.

Projections with a new design (increase flow, ergonomic handpiece) will allow us to capture market share and propel us to a strong leadership position in the disposable market.

Capital market projections include only those disposables that are used in conjunction with a capital piece of equipment. The disposable market projections are battery operated systems and accessories used with those systems.

***Zimmer Inc.***
***Business Case / Proforma***

**Project name: *PulsaJet*® Battery Powered Irrigation System**
**Prepared By: Carol Duvall, Product Manager; Tim Donaldson, Project Manager**
**Revision: 5**
**Date: March 11, 1998**

***Executive Summary:***

- **The Assumptions**

*(List The Assumptions Used For Each Element Of The Plan, (as applicable), As They Relate To The Various Scenarios Described In The Plan)*

- Market Direction / Opportunity Size
  - Competition remains the same
  - Release is June 1, 1999
  - Global trends were based on U.S. growth statistics
  - The need for irrigation will continue
- Proposed Product Design / Feature Competitiveness
  - Stryker flow rate = 1200 ml/min (claim) with showerhead tip
  - Stryker pressure = 6.8 psi (claim) with showerhead tip
  - Tip locking mechanism within scope of project
  - New tip design will be required
- Pricing Position
  - Battery units are discounted heavily
  - Current average selling price was used as our base for future sales
- Resources Required / Capacities
  - Var-A-Pulse will be discontinued after Pulsajet introduction
  - Forecast is accurate
- Project Schedule
  - Project is approved on or before April 6, 1998
  - All requested resources are appropriated
  - Product is manufactured in Dover
  - 510(k) is not required

- Regulatory Approval Path

    - Safety and effectiveness will not change significantly
    - No new marketing claims will be documented
    - Performance characteristics within realm of current products

***Zimmer Inc.***
***Business Case / Proforma***

**Project name: *PulsaJet*® Battery Powered Irrigation System**
**Prepared By: Carol Duvall, Product Manager; Tim Donaldson, Project Manager**
**Revision: 5**
**Date: March 11, 1998**

***Executive Summary:***

**Regulatory Path:**

A 510(k) will not be required for this product. There are no additional safety or effectiveness issues nor will there be a change in intended use or Marketing claims. The product will be CE marked. This is not expected to impact project schedule.

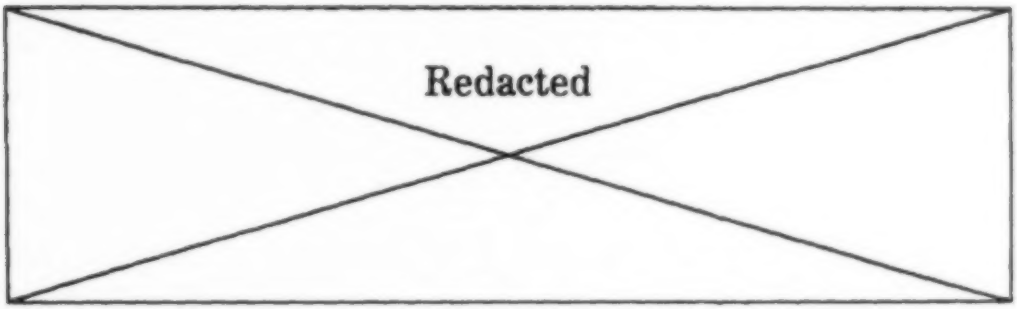

**The Numbers:**

| | Year 1 | Year 2 | Year 3 | Year 4 | Year 5 |
|---|---|---|---|---|---|
| Incremental Sales: | $3.9M | $6.5M | $8.6M | $10.9M | $13.5M |
| Return on Sales: | 32.3% | 20.6% | 22.6% | 23.2% | 23.7% |
| Promotion: | $244K | $85K | $60K | $60K | $60K |

Cash Flow: **$5.9M** (after discounting 12%)

Investment: $259K to $421K – Development Expenses
$300K to $475K – Capital Tooling

***Zimmer Inc.***
***Business Case / Proforma***

**Project name: *PulsaJet*® Battery Powered Irrigation System**
**Prepared By: Carol Duvall, Product Manager; Tim Donaldson, Project Manager**
**Revision: 5**
**Date: March 11, 1998**

***Marketing Input:***

**Market Size / Growth / Market Opportunity**

*(On A Major Program This Section Will Require 2-3 Pages Which Describe Current Market With Historical And Future Growth Trends. Define Market Drivers, Current And Future Customer Profiles And Buying Trends. Supplemental Graphics To Illustrate Market Are Recommended.)*

The market for debridement products is currently at $40 million domestically based on IMS data. The market is predominantly held by three key players:

Zimmer – $13 million or 35% market share
Stryker – $15 million or 41% market share
Davol – $9 million or 24% market share

The rate of growth in the hospital operating room market is low, approximately 1-2% per year. Growth will be driven primarily through competitive conversions with the development of this product. However, additional growth opportunity exists in the physical therapy market in the treatment of chronic wounds.

This market could potentially contribute $3-5 million in the short-term.

Threats to current business may exist in the cannibalization of current *Pulsavac* business in the operating room. Also, the physical therapy market creates challenges in the area of reimbursement for disposables used in lavage/debridement procedures.

Timing for the release of this project is urgent. Stryker, Inc. and Davol have aggressively marketed their battery system which has allowed them to gain market share over the past two years. Zimmer's market share with our current battery system has eroded due to poor performance and product quality issues.

The problems we are facing with our current design is not only forcing us out of the disposable market, but may also eliminate us from being a player in the lavage market in the future. By analyzing the lavage market by segmenting it between capital equipment and disposable products, we can see a definite decline in the market for capital equipment.

By using these same trends and projecting over the next five years, we can see a definite trend toward the use of disposable products. (Graphs attached – Appendix C)

***Zimmer Inc.***
***Business Case / Proforma***

**Project name: *PulsaJet*® Battery Powered Irrigation System**
**Prepared By: Carol Duvall, Product Manager; Tim Donaldson, Project Manager**

**Revision: 5**
**Date: March 11, 1998**

***Marketing Input:***

**Competitive Analysis**

*(Each Key Competitor In This Product Area Should Be Assessed. A Product Feature / Utility And Comparison Of Strengths And Weaknesses Should Be Provided. Describe Current Competitive Market Shares And Trends. What Is The Anticipated Competitive Response To This Program And Associated Risks? Charts and graphs with narrative explanation preferred)*

**Stryker Corporation:** Located in Kalamazoo, Michigan. Product development efforts have been intense in terms of introducing new pumps and disposable debridement systems. Their introduction of the Surgi-Lav system, the first battery operated system on the market, helped propel their growth in the operating room. This was followed by the Surgi-Lav Plus, a system operated by nitrogen, to allow them to compete effectively against Davol.

Stryker has not done much in terms of their capital piece of equipment, the Orthotec Pump. However, there are machines remaining in the field. Stryker had been updating capital equipment by replacing old units with new ones at no cost to the account.

Stryker Strengths

–Strong presence throughout the orthopaedic market in terms of their overall product line and corporate history.
–Market innovators.
–Full line of debridement tips.
–Strong positioning in the O.R. segment, especially orthopaedics.
–Aggressive targeting of large accounts.

Stryker Weaknesses

–Quality problems with earlier systems.
–Easy to swap-out Stryker capital machines.
–Only spikes one solution bag.
–Lacks an effective splash-free tip.

**Davol Corporation:** Located in Cranston, Rhode Island. The product is distributed through Davol's network of field sales representatives and occasionally through regional medical supply houses. Davol was the next to introduce a battery operated system into the market, the Simpulse Solo. They followed this with a product targeted toward the wound care market, the Var-I-Care System, also battery operated.

Prior to their battery system, the most notable feature of their systems were that they were nitrogen driven. They were able to achieve impressive growth and market share given they were not the initial market innovators. Davol's unit share decreased in the early 90's which led to their introduction of the battery system.

***Zimmer Inc.***
***Business Case / Proforma***

**Project name: *PulsaJet*® Battery Powered Irrigation System**
**Prepared By: Carol Duvall, Product Manager; Tim Donaldson, Project Manager**
**Revision: 5**
**Date: March 11, 1998**

***Marketing Input:***

One of Davol's primary sales tactics has been to approach Zimmer accounts with low pricing. Also, they stress their product features such as "no capital equipment", easy set-up, and a cone-shaped tip which resembles the Zimmer cone-shaped tips. Another aspect of Davol's price competition in that they often "bundle" their products with other Davol products in contracts offering significant discounts.

Davol Strengths

- –No capital purchase required.
- –Bundling contracts with wound drainage products.
- –Aggressive salesforce.
- –Full line of debridement systems.
- –Increased account targeting (wound care market)

Davol Weaknesses

- –Awkward handpiece.
- –Strongest presence is in the nitrogen driven market.

–Tips are not effective in reducing splash-back.
–Suction tubing is not included with product.

## Pricing Analysis

*(Provide Detailed Pricing Strategy, Segmentation Strategy (i.e., managed care). Describe Competitive Position Comparison And Anticipated Response To Pricing Strategy. Address Price / Volume Implications. (Charts and graphs with narrative explanation preferred.)*

The chart below provides the average selling price for wound debridement disposables as based on H.S.I. data. Included are two categories, capital equipment and disposables.

| | 1994 | 1995 | 1996 | 1997 |
|---|---|---|---|---|
| Capital Equipment | | | | |
| Zimmer | $15.63 | $15.92 | $19.75 | $17.96 |
| % Growth | | 1.82% | 19.39% | -9.97% |
| Stryker | $18.47 | $19.83 | $21.21 | $20.18 |
| % Growth | | 6.86% | 6.51% | -5.10% |
| Duval | N/A | N/A | N/A | N/A |
| % Growth | | | | |
| Disposables | | | | |
| Zimmer | N/A | N/A | $37.77 | $35.07 |
| % Growth | | | | -7.70% |
| Stryker | $26.08 | $27.26 | $26.27 | $24.83 |
| % Growth | | 4.33% | -3.77% | -5.80% |
| Duval | $21.18 | $22.78 | $34.35 | $27.11 |
| % Growth | | 7.02% | 33.68% | -26.71% |

***Zimmer Inc.***
***Business Case / Proforma***

**Project name: *PulsaJet*® Battery Powered Irrigation System**
**Prepared By: Carol Duvall, Product Manager; Tim Donaldson, Project Manager**
**Revision: 5**

**Date: March 11, 1998**

***Marketing Input:***

**Existing Product Impact/SKU's**

*(Describe The Plans For Phase Out Of Existing Products And Current Customer Transition As Required By Introduction Of New Product)*

The current *Var-A-Pulse* system will be obsoleted once the PulsaJet is introduced.

**Product Description**

General Description:

The *PulsaJet* will be a dual speed, battery operated pulsatile wound irrigation/debridement device which will offer simultaneous aspiration. The device will be packaged with various tips for different applications. These tips will feature a unique attachment method to the *PulsaJet* unit which will ensure that they do not fall off during surgical procedures. The *PulsaJet* will be designed with performance, reliability, ergonomics, and cost in mind. These are the four areas which are most lacking in the current *Var-A-Pulse* device. The goal of this project is to design a device which will meet or beat the current competition in flow rate and perceived pressure at a lower cost than the current *Var-A-Pulse* unit and works properly every time it is used.

Disposable Kit Components

| |
|---|
| *PulsaJet* Unit |
| Modified *Shower Tip* |

| Modified *Fan Spray Tip* |
| --- |
| Modified *Intramed. Tip* |

**Cases Required**

There will be no cases required for this product.

**Packaging And Labeling**

The standard packaging configuration for the current product is tray packing. This would be an acceptable method for the *PulsaJet*; however, we will be investigating the possibility of Tyvek pouch packaging due to the potential cost savings.

**Marketing Launch Plan:**

*(Describe how it will be executed. Is it a Roll Out? A Simultaneous Release? By Country, Region, Or Specific Surgeons? Charts And Graphs May Be Used To Illustrate The Impact Of Various Scenario Choices In Product Introduction. 2-3 pages preferred.)*

**Sales Collaterals**

The *PulsaJet* System is scheduled for release June 1, 1999. The sales force information packet will include a salesforce announcement, price/commission sheet, 2-sided sell sheet, inservice video, impact pressure sheet, and product profiler.

***Zimmer Inc.***
***Business Case / Proforma***

**Project name: *PulsaJet*® Battery Powered Irrigation System**

**Prepared By: Carol Duvall, Product Manager; Tim Donaldson, Project Manager**
**Revision: 5**
**Date: March 11, 1998**

***Marketing Input:***

**Promotions**

Samples - Each Distributor will receive an allotment of 5 samples for the first 5 months of the product release. Orders for these samples must be made through a Zimmer Patient Care Division Marketing Assistant in Warsaw, IN. Samples over and above this amount can be purchased at a Distributor discount of list less 70%.

Try-It-Pricing - Competitive accounts evaluating the *PulsaJet* will be offered 50% off list pricing for up to two boxes of product. We will pay (E) commission on all conversion orders.

Top 100 Zimmer Hip and Knee Accounts - New debridement business (accounts not purchasing *Pulsavac System* products within the previous 12 months) will deliver (E) commission. This can be a *Pulsavac II* or *PulsaJet* conversion.

**Product Release Advertising/Education Requirements:**

These costs are summarized on page 18

**Product Release Inventory Requirements:**

| No. Of Sets | Dollar Value | Time Required |
|---|---|---|
| 600 (sale units) | 96000 | 7 weeks |

**Sales Forecast**

| | | Year 1 | Year 2 | Year 3 | Year 4 | Year 5 |
|---|---|---|---|---|---|---|
| New Product | | | | | | |
| *PulsaJet* | Units | 173,800 | 300,379 | 378,173 | 467,263 | 566,587 |
| | Dollars | $ 5,214,000 | $ 7,773,809 | $ 9,824,935 | $12,130,147 | $14,725,440 |
| | A.S.P. | $ 30.00 | $ 25.88 | $ 25.98 | $ 25.96 | $ 25.99 |
| Existing Product | | | | | | |
| *Pulsevac* | Units | 843,301 | 783,903 | 728,211 | 675,170 | 627,732 |
| | Dollars | $12,700,617 | $12,509,328 | $12,322,298 | $12,137,523 | $11,955,001 |
| | A.S.P. | $ 15.06 | $ 15.96 | $ 16.92 | $ 17.97 | $ 19.04 |
| * *Var-A-Pulse* | Units | 36,800 | 36,800 | 35,800 | 35,800 | 34,800 |
| | Dollars | $ 1,290,576 | $ 1,290,576 | $ 1,255,506 | $ 1,255,506 | $ 1,220,436 |
| | A.S.P. | $ 35.07 | $ 35.07 | $ 35.07 | $ 35.07 | $ 35.07 |
| Incremental | | | | | | |
| *PulsaJet* | Units | 137,000 | 263,579 | 342,373 | 431,463 | 531,781 |
| | Dollars | $ 3,923,424 | $ 6,483,233 | $ 8,569,429 | $10,874,641 | $13,505,004 |

* The hypothetical forecast for Var-A-Pulse is supplied for reference only. This product will be discontinued upon release of the Pulsajet.

## *Zimmer Inc.*
## *Business Case / Proforma*

**Project name: *PulsaJet*® Battery Powered Irrigation System**

**Prepared By: Carol Duvall, Product Manager; Tim Donaldson, Project Manager**

**Revision: 5**

**Date: March 11, 1998**

***Development Engineering Input:***

**Project Team Members**

- Project Manager - Tim Donaldson
- Marketing Product Manager - Carol Duvall
- Manufacturing Engineer(s) - Chris Finn (Dover)
- Packaging Engineering/Labeling - Brad Durcholz
- Purchasing - Steve Winkler (Dover)

- Regulatory – Paula Osorio (Dover)
- Clinical – TBD if necessary
- Inventory Planning – Jeff Hootman (Dover)

**Skill Sets Required, Headcount, and Commitment Level**

*(Summarize requirements form attached Resource Requirement Timeline)*

See Attached Chart (Appendix A) for Commitment Level and Duration

**Development Program Expense Budget:**

See Attached Chart (Appendix A) for Development Expense Budget

**Research Laboratory Expenses**

Research laboratory expense is not anticipated for this project.

**Project Schedule:**

*(Describe and Summarize the key milestones of the program and attach Gantt chart. Schedule Should Reflect Realistic And Achievable Timing Using Input From Marketing, Development, Manufacturing and Distribution. Explain Critical Path Activities And Potential Risks To Schedule. Describe Impact Of Delays And Contingency Plans As Required.)*

The Gantt Chart is attached to this document in Appendix B.

*Zimmer Inc.*
*Business Case / Proforma*

**Project name: *PulsaJet*® Battery Powered Irrigation System**
**Prepared By: Carol Duvall, Product Manager; Tim Donaldson, Project Manager**
**Revision: 5**
**Date: March 11, 1998**

***Manufacturing Input:***

**Manufacturing Build Plan:**

| | Year 1 | Year 2 | Year 3 | Year 4 | Year 5 |
|---|---|---|---|---|---|
| New Product | | | | | |
| *Pulsajet* | 173800 | 300379 | 378173 | 467263 | 566587 |
| | | | | | |
| Existing Product | | | | | |
| *Pulsavac* | 843301 | 783903 | 728211 | 675170 | 627732 |
| *Vac-A-Pulse* | 0 | 0 | 0 | 0 | 0 |

**Make Versus Buy Analysis**

*(Describe Options To Source And Associated Costs / Logistics)*

We intend to look at practical possibilities in the manufacture of the product, both internally and externally. It is likely that the Dover facility would provide the best quality product at a competitive cost.

**Facilities/Tooling/Equipment; Capital Investments**

*(Describe Cost And Timing Of Investment And Obsolescence On Existing Equipment. Will Equipment Be Leased, Purchased, Or Rented?)*

If the product is produced in Dover, no new equipment or facilities will be required. Note: These

figures do not include any equipment that would be required by an outside manufacturer.

**Head Count Additions/Deletions:**

*(Describe Production And Manufacturing Human Resource Requirements.)*

Since the current *Var-A-Pulse* will be obsoleted once the *PulsaJet* is introduced, the capacity would initially be available in Dover to produce the *PulsaJet* without headcount or facility addition. However, if the forecast as accurate, the large volume jump in the second year on would necessitate the addition of personnel. For reference, Dover is currently running 1 shift. A typical shift can produce approximately 1200 units per week. This equates to 62,400 per year (assuming 8 hours shifts, 5 person crews). If we look at the volume in the second year, 4.8 shifts per week will be required to keep up with demand. This definitely indicates that additional manufacturing personnel will be required within the first year.

***Zimmer Inc.***
***Business Case / Proforma***

**Project name: *PulsaJet*® Battery Powered Irrigation System**
**Prepared By: Carol Duvall, Product Manager; Tim Donaldson, Project Manager**
**Revision: 5**
**Date: March 11, 1998**

***Manufacturing Input:***

**Capabilities and Resources:**

*(Do We Have The Personnel, Management Systems, Direct Or Related Previous Production Experience With This Type Of Production Process? Do We Have The Capabilities To Meet The Projected Release Date? If Not, Why?)*

The manufacturing processes of this product are very similar to many items that Dover currently manufactures. We have direct production experience with all aspects of the proposed design. If we keep the manufacture internal, we definitely have the capabilities to meet or beat the projected launch date.

**Manufacturing Process Assessment**

*(Identify The Issues And Requirements Related To Existing Equipment And Capacity Available. Are New Processing Methods Required To Meet Design/Performance/Cost Requirements?)*

This product is essentially a disposable plastic tubing set. This is Dover's greatest area of expertise. No new processing methods are expected - the assembly will be very similar to the current product. If the decision is made to take the manufacturing outside of Zimmer, it is not possible at this time to identify equipment or process requirements until we determine that manufacturer's capabilities.

**Packaging Resources:**

*(Identify Specific Requirements For This Project Related To People Required, Equipment, And Necessary Changes To Packaging Materials Over Existing Materials Required.)*

One of the cost savings ideas that we definitely want to evaluate is Tyvek pouching the product versus using the tray packs which are currently used. This potentially could add up to a $1.20 per unit cost savings. The pouches are currently being made in Dover and evaluating this possibility would require minimal resource and expense. Either way we go, pouches or trays, a packaging validation would be required.

**Outsourcing Requirements:**

*(Identify All Resources That Are Expected To Be Outsourced, i.e.; Instruments, Machining, Casting, Etc..)*

Product Management's input on this project was that the standard cost target should be $18.50 (for reference, the current standard cost of the *Var-A-Pulse* is $18.67). In looking at the best and worst case scenarios, in terms of development costs, it would cost between $394K and 630K to meet the above input in the established time frame. Development's plan is to focus on a standard cost of $16.00. I estimate that it will cost an additional $143K to 226K in tooling and resources. However, at the additional $2.50/unit savings, this would equate to **$4.7M** added to the bottom line over the first five years. A potential disadvantage is that it may result in a 1 to 3 month delay in product launch date. Outsourcing potentially could be required to hit a lower target.

***Zimmer Inc.***
***Business Case / Proforma***

**Project name: *PulsaJet*® Battery Powered Irrigation System**

**Prepared By: Carol Duvall, Product Manager; Tim Donaldson, Project Manager**
**Revision: 5**
**Date: March 11, 1998**

***Manufacturing Input:***

## Materials/Sourcing Plan

*(Are The Required Materials Current Or New? How Will New Materials Be Integrated Into Stock Planning Cycles?)*

It is anticipated that a new material will be used in this product. This material will have fluid path contact, so it will need to undergo Cytotoxicity, Sensitization, and Intracutaneous Toxicity testing. All other materials are anticipated to be current and approved.

## Standard Cost Estimates

***High***

| | Year 1 | Year 2 | Year 3 | Year 4 | Year 5 |
|---|---|---|---|---|---|
| New Products | | | | | |
| Pulmo Jet | 16.00 | 17.10 | 17.61 | 18.14 | 18.69 |
| Existing Products | | | | | |
| Pur-A-Pulse | 19.25 | 19.83 | 20.42 | 21.04 | 21.67 |
| Incremental | | | | | |
| | -1.25 | -2.73 | -2.81 | -2.90 | -2.98 |

***Medium***

| | Year 1 | Year 2 | Year 3 | Year 4 | Year 5 |
|---|---|---|---|---|---|
| New Products | | | | | |
| Pulmo Jet | 16.00 | 16.00 | 16.32 | 16.65 | 16.97 |
| Existing Products | | | | | |
| Pur-A-Pulse | 18.89 | 19.06 | 19.45 | 19.83 | 20.23 |
| Incremental | | | | | |
| | -2.89 | -3.06 | -3.13 | -3.18 | -3.26 |

***Low***

| | Year 1 | Year 2 | Year 3 | Year 4 | Year 5 |
|---|---|---|---|---|---|
| New Products | | | | | |
| Pulmo Jet | 15.00 | 15.00 | 15.15 | 15.30 | 15.45 |
| Existing Products | | | | | |
| Pur-A-Pulse | 18.00 | 18.18 | 18.36 | 18.55 | 18.73 |
| Incremental | | | | | |
| | -3.00 | -3.18 | -3.21 | -3.25 | -3.28 |

[redacted]

**Orthopedic Implant Division**

**PulseJet Battery System**

| | Year 0 | Year 1 | Year 2 | Year 3 | Year 4 | Year 5 |
|---|---|---|---|---|---|---|
| Units | | - | - | - | - | - |
| Existing | | [redacted] | [redacted] | [redacted] | [redacted] | [redacted] |
| New | | [redacted] | [redacted] | [redacted] | [redacted] | [redacted] |
| Incremental | | [redacted] | [redacted] | [redacted] | [redacted] | [redacted] |
| Sales | | | | | | |
| Existing | | [redacted] | [redacted] | [redacted] | [redacted] | [redacted] |
| New | | [redacted] | [redacted] | [redacted] | [redacted] | [redacted] |
| Incremental | | [redacted] | [redacted] | [redacted] | [redacted] | [redacted] |
| Cost of Goods Sold | | | | | | |
| Incremental | | [redacted] | [redacted] | [redacted] | [redacted] | [redacted] |
| Cost of Goods Sold | [redacted] | [redacted] | [redacted] | [redacted] | [redacted] | [redacted] |
| Gross Profit | [redacted] | [redacted] | [redacted] | [redacted] | [redacted] | [redacted] |
| Program Expense Budget | | | | | | |
| Travel | [redacted] | [redacted] | | | | |
| Engineering | [redacted] | [redacted] | [redacted] | [redacted] | [redacted] | [redacted] |
| Clinical and other R&D Costs | [redacted] | [redacted] | - | - | - | - |
| | [redacted] | [redacted] | [redacted] | [redacted] | [redacted] | [redacted] |
| Royalties | | [redacted] | [redacted] | [redacted] | [redacted] | [redacted] |
| Commissions | | [redacted] | [redacted] | [redacted] | [redacted] | [redacted] |
| Promotional | | | | | | |
| Advertising | | [redacted] | [redacted] | [redacted] | [redacted] | [redacted] |
| Promotion | | [redacted] | [redacted] | [redacted] | [redacted] | [redacted] |
| Training | | [redacted] | [redacted] | [redacted] | [redacted] | [redacted] |
| Other (Specify) | | [redacted] | - | - | - | - |
| Total Advertising and Promotion | | [redacted] | [redacted] | [redacted] | [redacted] | [redacted] |
| Total Costs | [redacted] | [redacted] | [redacted] | [redacted] | [redacted] | [redacted] |
| Net Revenue | [redacted] | [redacted] | [redacted] | [redacted] | [redacted] | [redacted] |
| Total Cash Flows After Discounting at 15% | [redacted] | | | | | |
| Revenue Split | | [redacted] | [redacted] | [redacted] | [redacted] | [redacted] |
| Capital Requirements | | | | | | |
| Tooling | [redacted] | | | | | |

[redacted]

[redacted]

## Return on Investment and Payback Calculation
## ($ 000's Omitted)

| GROUP/DIVISION | LOCATION | DATE | RETURN ON INVESTMENT |
|---|---|---|---|
| Orthopaedic Insight | | 10-Mar-98 | 187.23% |
| PROJECT TITLE | | | PAYBACK PERIOD |
| Pursuit Battery System | | | 8.7 YEARS |

| (1) | (2) | (3) | (4) | (5) | (6) | (7) | (8) | (9) | (10) | (11) | (12) | (13) | (14) |
|---|---|---|---|---|---|---|---|---|---|---|---|---|---|
| | | | | | Net Income or Savings | | | | | | | | |
| Calendar Year | Time Period | Total Investment | Dir. Earnings Before Depr., COM, & Inc. Taxes | Depreciation | Before Depr. & I.T. [Col. 4-5] | After Depr. & I.T. [Col. 6 x 52%] | Reinv. & Recovery of Assets | Total Cash Return [Col. 6+7+8] | Net Cash Flow [Col. 6-3] | Discount Factor @ 187.23% | Discount Cash Flow Column [Col. 10x11] | Discount Factor @ | Discount Cash Flow Column [Col. 10x13] |
| | -3 | | | | - | | | | | | | | |
| | -2 | | | | | | | | | | | | |
| | -1 | | | | | | | | | | | | |
| 1997 | [illegible] | [illegible] | - | - | - | - | | - | [illegible] | 1.0000 | [illegible] | 1.0000 | |
| 1998 | 1 | 80.8 | 1,022.8 | 88.7 | 988.3 | 817.6 | | 794.3 | 893.6 | 0.3488 | 264.08 | | |
| 2000 | 2 | | 1,344.8 | 91.9 | 1,252.7 | 795.3 | | 887.3 | 887.3 | 0.1811 | 120.83 | | |
| 2001 | 3 | | 1,626.6 | 44.3 | 1,581.6 | 1,105.7 | | 1,210.0 | 1,210.0 | 0.0949 | 71.39 | | |
| 2002 | 4 | | 2,508.4 | 31.8 | 2,476.6 | 1,926.6 | | 1,957.3 | 1,957.3 | 0.0239 | 38.73 | | |
| 2003 | 5 | | 3,184.3 | 28.3 | 3,156.0 | 1,894.2 | | 1,888.5 | 1,888.5 | 0.0099 | 17.73 | | |
| 2004 | 6 | | - | 28.3 | (28.3) | (16.3) | | 10.0 | 10.0 | 0.0039 | 0.04 | | |
| 2005 | 7 | | - | 28.3 | (28.3) | (16.3) | | 10.0 | 10.0 | 0.0013 | 0.01 | | |
| 2006 | 8 | | - | | - | - | | - | - | 0.0005 | - | | |
| 2007 | 9 | | - | | - | - | | - | - | 0.0002 | - | | |
| 2008 | 10 | | - | | - | - | | - | - | 0.0001 | - | | |
| N/A | Total | 9658.1 | $10,856.2 | $303.3 | $8,752.8 | $6,046.8 | - | $6,869.1 | $6,791.0 | N/A | - | N/A | - |

**Zimmer**
**Orthopedic Implant Division**
**PulseJet Battery System**

| | Year 0 | Year 1 | Year 2 | Year 3 | Year 4 | Year 5 |
|---|---|---|---|---|---|---|
| Units | | | | | | |
| Existing | | | | | | |
| New | | | | | | |
| Incremental | | | | | | |
| Sales | | | | | | |
| Existing | | | | | | |
| New | | | | | | |
| Incremental | | | | | | |
| Cost of Goods Sold | | | | | | |
| Incremental | | | | | | |
| Cost of Goods Sold | | | | | | |
| Gross Profit | | | | | | |
| Program Expense Budget | | | | | | |
| Travel | | | | | | |
| Engineering | | | | | | |
| Clinical and other R&D Costs | | | | | | |
| Supplies | | | | | | |
| Commissions | | | | | | |
| Promotion | | | | | | |
| Advertising | | | | | | |
| Promotion | | | | | | |
| Training | | | | | | |
| Other (Demand) | | | | | | |
| Total Advertising and Promotion | | | | | | |
| Yield Gain | | | | | | |
| Net Revenue | | | | | | |
| Yield Gain Flows After Discounting at 15% | | | | | | |
| Return on Sales | | | | | | |
| Capital Requirements | | | | | | |
| Tooling | | | | | | |

## Return on Investment and Payback Calculation
## ($ 000's Omitted)

| GROUP/DIVISION | LOCATION | DATE | RETURN ON INVESTMENT |
|---|---|---|---|
| Orthopaedic Implant | | 10-Mar-98 | 113.00% |
| PROJECT TITLE | | | PAYBACK PERIOD |
| Pulsejet Battery System | | | 0.9 YEARS |

| (1) | (2) | (3) | (4) | (5) | (6) | (7) | (8) | (9) | (10) | (11) | (12) | (13) | (14) |
|---|---|---|---|---|---|---|---|---|---|---|---|---|---|
| | | | | | Net Income or Savings | | | | | | | | |
| Calendar Year | Time Frame | Total Investment | Dir. Earnings Before Depr., COM, & Inc. Taxes | Depreciation | Before Depr. & I.T. (Col. 4-5) | After Depr. & I.T. (Col. 6 x 62%) | Reinv. & Recovery of Assets | Total Cash Return (Col. 5+7+8) | Net Cash Flow (Col. 9-3) | Discount Factor @ 113.00% | Discount Cash Flow Column (Col. 10x11) | Discount Factor @ | Discount Cash Flow Column (Col. 10x13) |
| | -3 | | | | | | | | | | | | |
| | -2 | | | | | | | | | | | | |
| | -1 | | | | | | | | | | | | |
| 1999 | Ref. Pt. | $765.6 | - | - | - | - | | - | ($765.6) | 1.0000 | ($765.60) | 1.0000 | |
| 1999 | 1 | 139.7 | 1,242.7 | 137.8 | 1,104.8 | 685.0 | | 822.8 | 682.2 | 0.4695 | 324.00 | | |
| 2000 | 2 | | 1,344.6 | 98.5 | 1,246.1 | 772.6 | | 871.1 | 871.1 | 0.2204 | 191.99 | | |
| 2001 | 3 | | 1,828.0 | 78.3 | 1,655.7 | 1,158.6 | | 1,236.8 | 1,236.8 | 0.1035 | 128.36 | | |
| 2002 | 4 | | 2,508.4 | 69.2 | 2,468.2 | 1,524.1 | | 1,574.3 | 1,574.3 | 0.0486 | 76.51 | | |
| 2003 | 5 | | 3,194.3 | 41.8 | 3,152.4 | 1,954.5 | | 1,996.4 | 1,996.4 | 0.0228 | 45.52 | | |
| 2004 | 6 | | - | 41.8 | (41.8) | (26.0) | | 15.8 | 15.8 | 0.0107 | 0.17 | | |
| 2005 | 7 | | - | 41.8 | (41.8) | (26.0) | | 15.8 | 15.8 | 0.0050 | 0.08 | | |
| 2006 | 8 | | - | | - | - | | - | - | 0.0024 | - | | |
| 2007 | 9 | | - | | - | - | | - | - | 0.0011 | - | | |
| 2008 | 10 | | - | | - | - | | - | - | 0.0005 | - | | |
| N/A | Total | $898.3 | $10,216.0 | $482.8 | $9,733.4 | $6,034.7 | - | $6,517.3 | $6,521.6 | N/A | $0.01 | N/A | - |

***Zimmer Inc.***
***Business Case / Proforma***

**Project name: *PulsaJet*® Battery Powered Irrigation System**
**Prepared By: Carol Duvall, Product Manager; Tim Donaldson, Project Manager**
**Revision: 5**
**Date: March 11, 1998**

**OpCom Approvals** **Date _____**

_____

_____

_____

_____

_____

_____

_____

_____

***Zimmer Inc.***

*Business Case / Proforma*

***PulsaJet® Battery Powered Irrigation System***

# Appendix A

## *Development Cost Summary*

*PulseJet*
**$16.00 Target Cost**
**Estimated "Best Case" DEVELOPMENT COSTS**

| DESCRIPTION | 1998 J | F | M | A | M | J | J | A | S | O | N | D | TOTAL 1998 | 1999 J | F | M | A | M | J | J | A | S | O | N | D | TOTAL 1999 | TOTAL $16.00 Target |
|---|---|---|---|---|---|---|---|---|---|---|---|---|---|---|---|---|---|---|---|---|---|---|---|---|---|---|---|
| Program Manager - DB | 0.3 | 0.3 | 0.5 | 0.8 | 0.8 | 0.8 | 0.7 | 0.6 | 0.5 | 0.6 | 0.8 | 1.0 | 7.7 | 0.8 | 0.3 | 0.3 | 0.2 | 0.2 | 0.1 | | | | | | | 1.9 | 9.6 |
| Manufacturing Engineer - DB | 0.0 | 0.0 | 0.2 | 0.2 | 0.2 | 0.2 | 0.3 | 0.4 | 0.6 | 0.6 | 0.8 | 0.8 | 4.6 | 0.4 | 0.3 | 0.2 | 0.1 | 0.1 | | | | | | | | 1.1 | 5.1 |
| Drafting | 0.0 | 0.0 | 0.5 | 0.8 | 0.8 | 0.4 | 0.5 | 0.3 | 0.2 | 0.3 | 0.3 | 0.2 | 4.3 | 0.2 | 0.1 | 0.1 | | | | | | | | | | 0.4 | 4.7 |
| Technician | 0.0 | 0.0 | 0.5 | 0.8 | 0.8 | 0.5 | 0.8 | 0.5 | 0.8 | 0.7 | 0.8 | 1.0 | 7.2 | 1.0 | 0.5 | 0.3 | 0.1 | | | | | | | | | 1.9 | 9.1 |
| | (used $ 6,500/mo or cost) | | | | | | | | | | | Sub-Total | $160,800 | | | | | | | | | | | | Sub-Total | $40,200 | $191,000 |
| Testing Costs | | | | | | | | | | | | | $300,000 | | | | | | | | | | | | | | 300,000.0 |
| Fixture Costs (bits) | | | | | | | | | | | | | $3,500 | | | | | | | | | | | | | | 3,500.0 |
| Testing Costs (Toxicity / Biocompatibility) | | | | | | | | | | | | | $5,000 | | | | | | | | | | | | | $1,000 | 6,000.0 |
| Prototype Costs (Field Eval. / Validation) | | | | | | | | | | | | | $40,000 | | | | | | | | | | | | | | 40,000.0 |
| Travel Costs | | | | | | | | | | | | | $8,000 | | | | | | | | | | | | | $9,500 | $17,500 |
| Outside Design | | | | | | | | | | | | | $1,000 | | | | | | | | | | | | | | 1,000.0 |
| | | | | | | | | | | | | Sub-Total | $357,500 | | | | | | | | | | | | Sub-Total | $10,500 | $368,000 |
| **TOTAL COSTS** | | | | | | | | | | | | | **$518,300** | | | | | | | | | | | | | **$50,700** | **$559,000** |
| Note: No cost estimate for support groups | | | | | | | | | | | | | | | | | | | | | | | | | | | |

*PulseJet*

**$16.00 Target Cost**

**Estimated "Worst Case" DEVELOPMENT COSTS**

| DESCRIPTION | 1998 J | F | M | A | M | J | J | A | S | O | N | D | TOTAL 1998 | 1999 J | F | M | A | M | J | J | A | S | O | N | D | TOTAL 1999 | TOTAL $16.00 |
|---|---|---|---|---|---|---|---|---|---|---|---|---|---|---|---|---|---|---|---|---|---|---|---|---|---|---|---|
| Program Manager - D6 | 0.0 | 0.0 | 1.0 | 1.0 | 1.0 | 1.0 | 0.8 | 0.8 | 0.8 | 0.8 | 0.8 | 1.0 | 8.0 | 1.0 | 1.0 | 1.0 | 0.8 | 0.6 | 0.4 | 0.2 | 0.1 | 0.1 | | | | 5.2 | 14.1 |
| Manufacturing Engineer - D5 | 0.0 | 0.0 | 0.5 | 0.8 | 0.5 | 0.8 | 0.8 | 0.5 | 0.8 | 0.7 | 0.8 | 1.0 | 8.3 | 1.0 | 0.8 | 1.0 | 0.8 | 0.3 | 0.5 | 0.2 | 0.1 | | | | | 4.3 | 10.5 |
| Drafting | 0.0 | 0.0 | 1.0 | 1.0 | 1.0 | 1.0 | 0.8 | 0.3 | 0.3 | 0.3 | 0.3 | 0.5 | 6.8 | 1.0 | 0.4 | 0.3 | 0.1 | | | | | | | | | 1.8 | 8.3 |
| Technician | 0.0 | 0.0 | 1.0 | 1.0 | 1.0 | 1.0 | 0.8 | 0.5 | 0.8 | 0.8 | 1.0 | 1.0 | 8.9 | 1.0 | 1.0 | 0.5 | 0.2 | 0.2 | 0.1 | | | | | | | 3.0 | 11.8 |
| | (used $ 8,500/mo fix rate) | | | | | | | | | | | Sub-Total | $188,678 | | | | | | | | | | | | Sub-Total | $108,880 | $307,285 |
| Testing Costs | | | | | | | | | | | | | $475,000 | | | | | | | | | | | | | | 475,000.0 |
| Fixture Costs (Mfg) | | | | | | | | | | | | | $7,500 | | | | | | | | | | | | | | 7,500.0 |
| Testing Costs (Toxicity / Biocompatibility) | | | | | | | | | | | | | $12,500 | | | | | | | | | | | | | | 12,500.0 |
| Prototype Costs (Field Eval. / Validation) | | | | | | | | | | | | | $45,000 | | | | | | | | | | | | | $7,000 | 52,000.0 |
| Travel Costs | | | | | | | | | | | | | $12,000 | | | | | | | | | | | | | $15,000 | $27,000 |
| Outside Design | | | | | | | | | | | | | $15,000 | | | | | | | | | | | | | | 15,000.0 |
| | | | | | | | | | | | | Sub-Total | $567,000 | | | | | | | | | | | | Sub-Total | $22,000 | $589,000 |
| **TOTAL COSTS** | | | | | | | | | | | | | **$755,678** | | | | | | | | | | | | | **$130,880** | **$896,285** |
| Note: No cost estimate for support groups | | | | | | | | | | | | | | | | | | | | | | | | | | | |

***Zimmer Inc.***

*Business Case / Proforma*

***PulsaJet® Battery Powered Irrigation System***

# Appendix B

## *Gantt Chart*

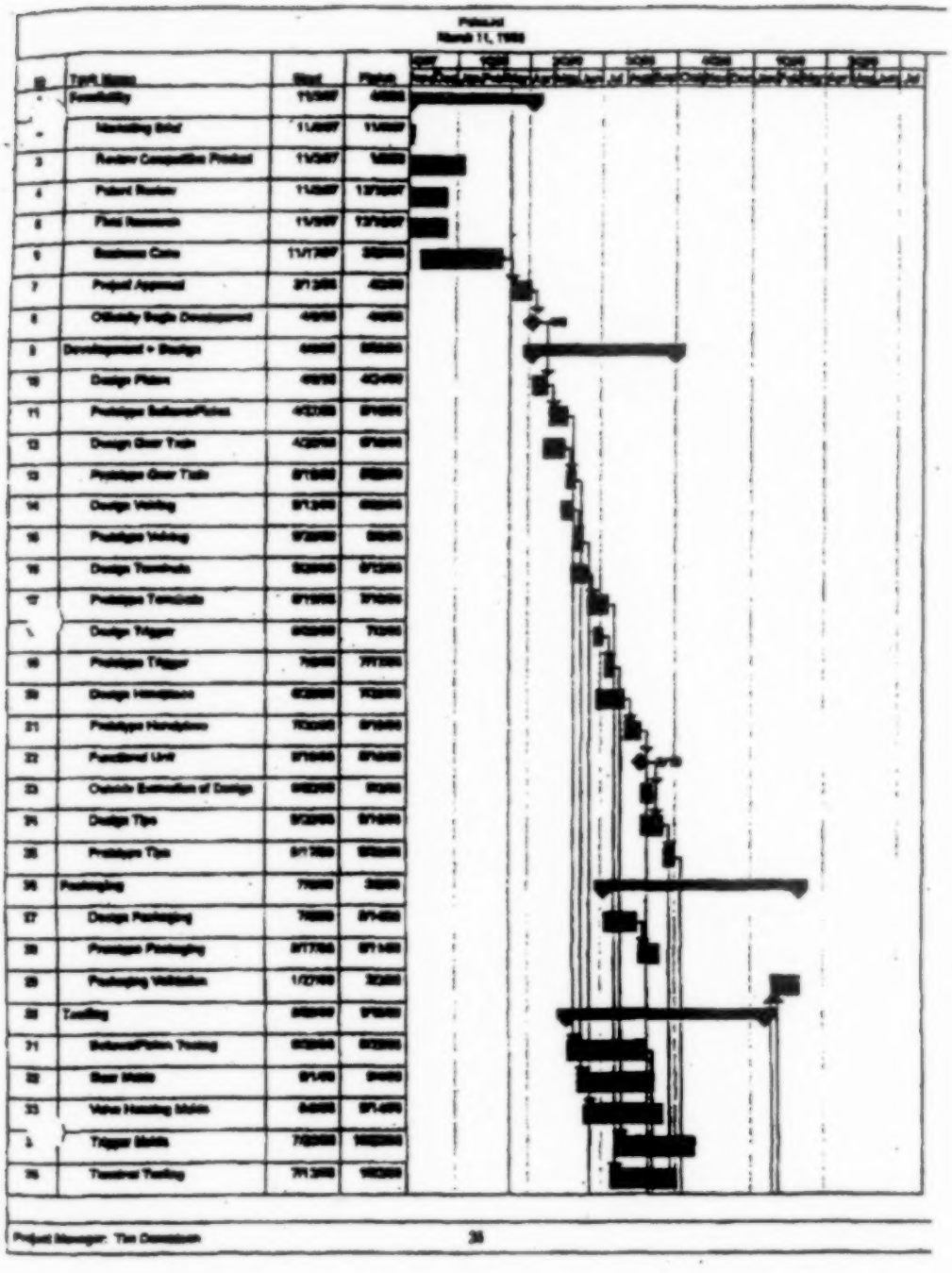

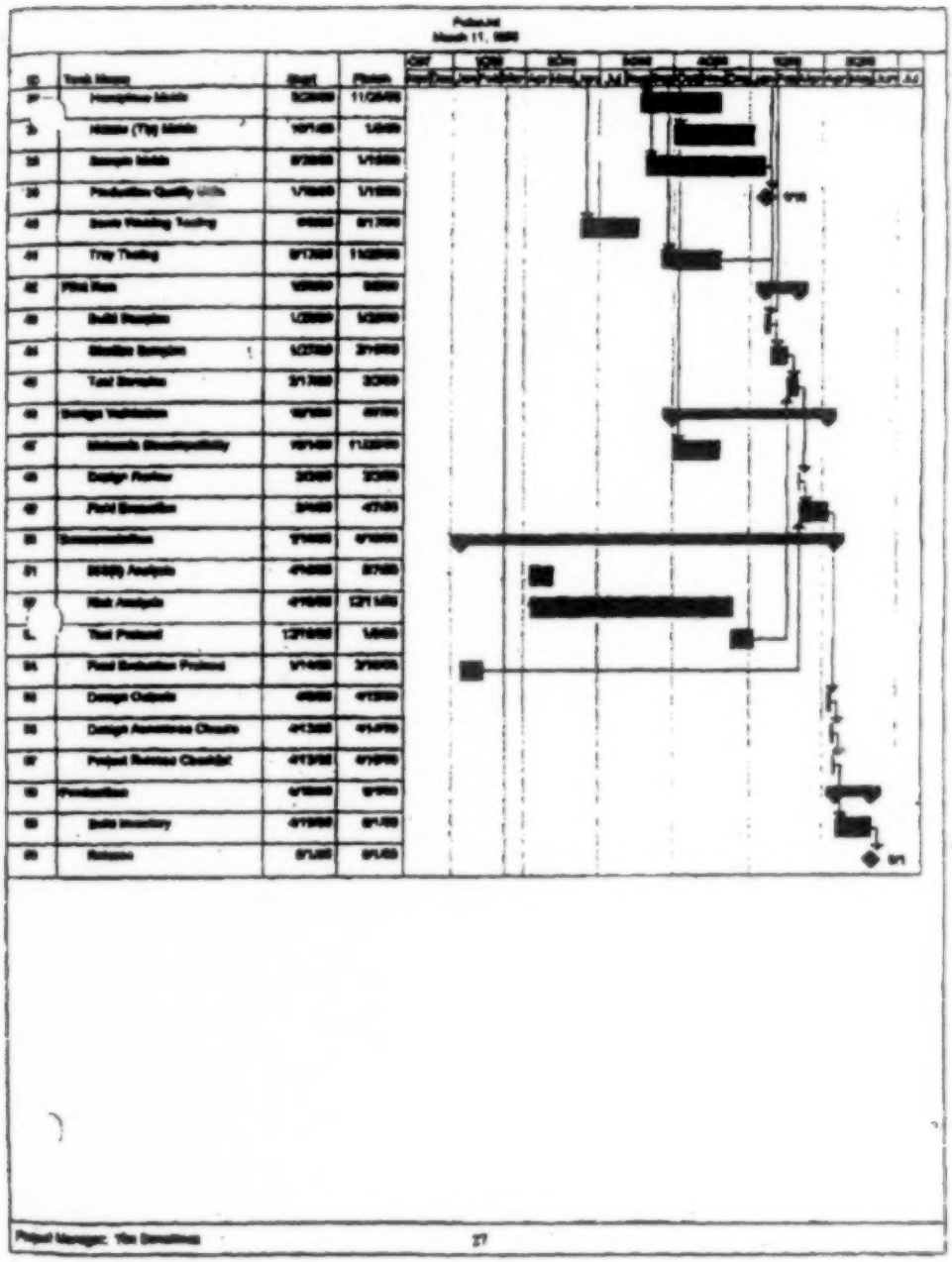

***Zimmer Inc.***

*Business Case / Proforma*

***PulsaJet® Battery Powered Irrigation System***

# Appendix C

## *Market Trends*

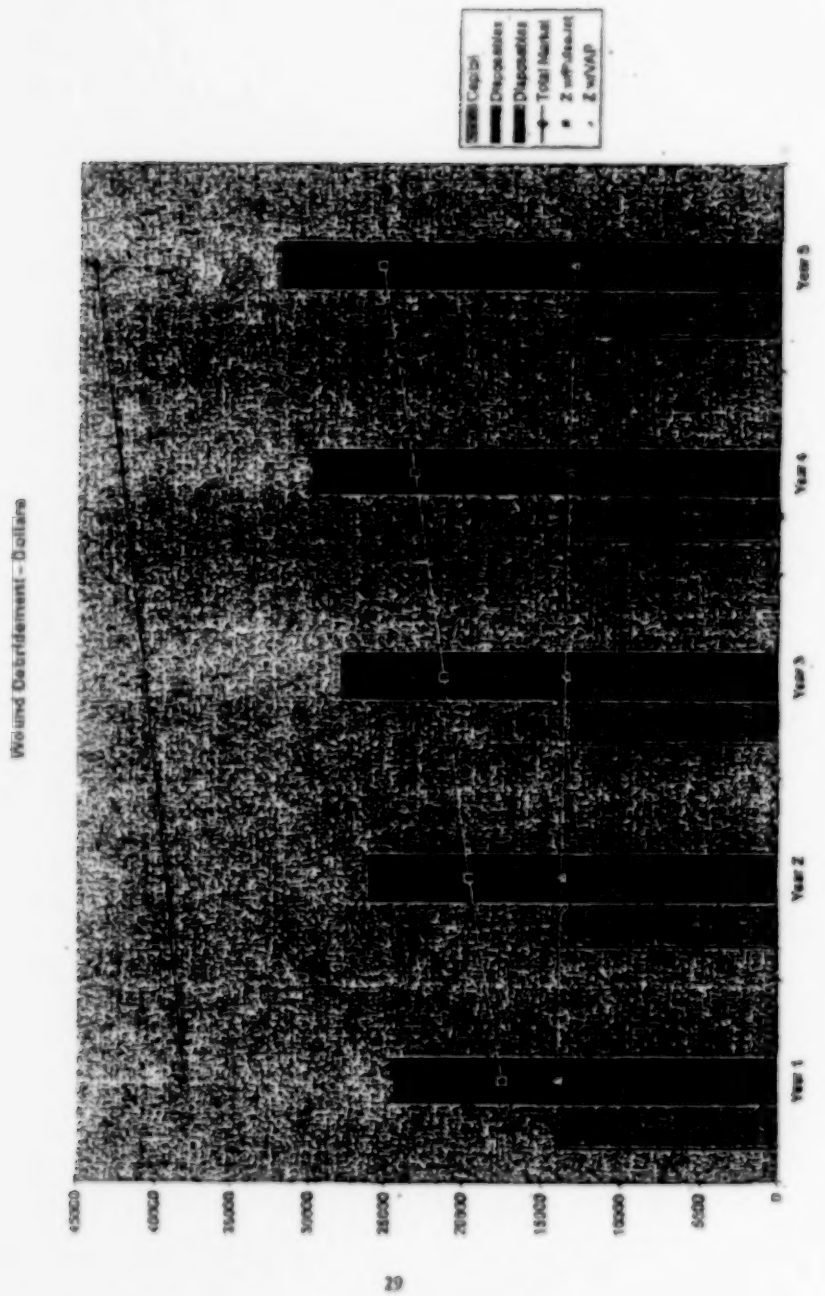
Capital
Disposables
Disposables
Total Market
Wound Debridement - Dollars
Year 1
Year 2
Year 3
Year 4
Year 5
0
5000
10000
15000
20000
25000
30000
35000
40000
45000

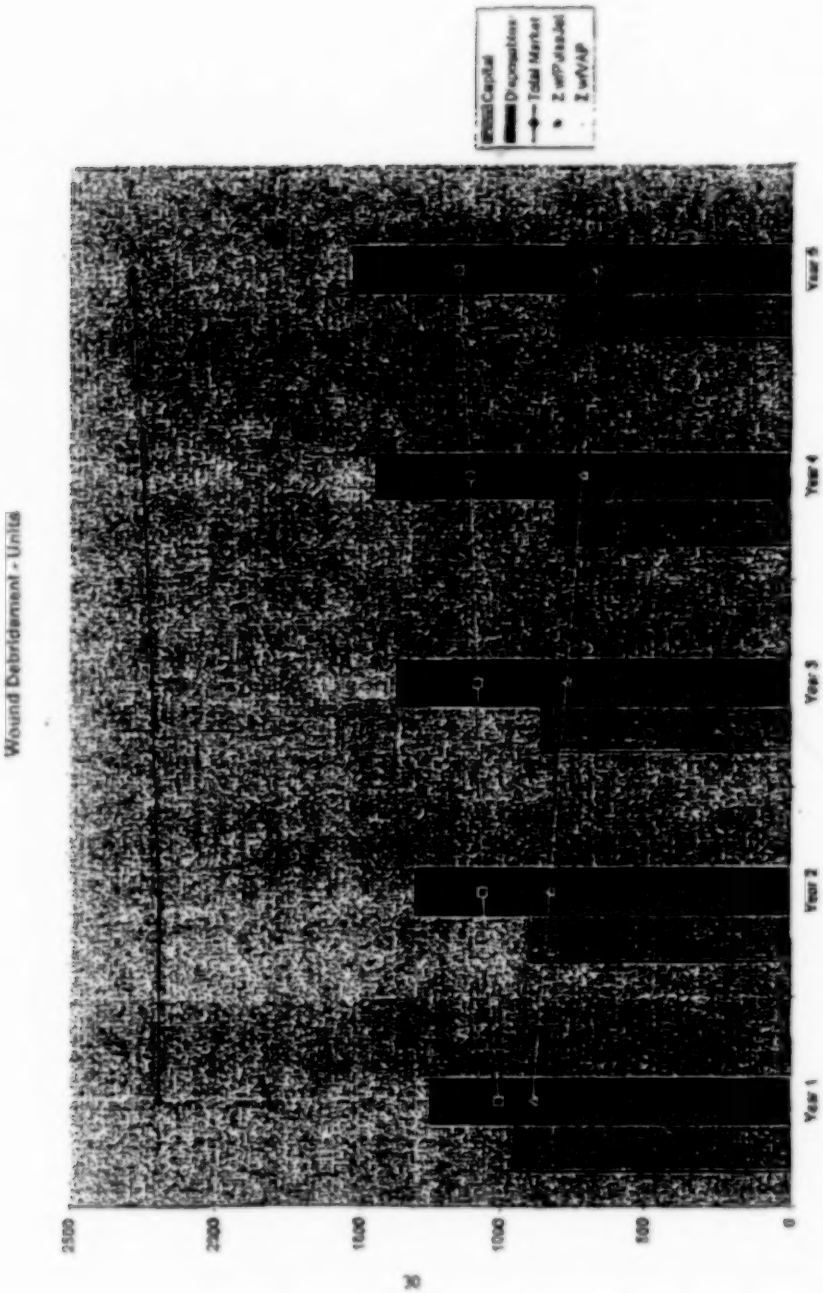
Wound Debridement - Units
Total Capital
Depreciation
Total Market
Year 1
Year 2
Year 3
Year 4
Year 5
2500
2000
1500
1000
500
0
$

**BATTERY PULSAVAC**

***TOTAL NUMBERS FOR ALL SPREADSHEETS=U.S. ONLY***

| YEAR 1 | M1* | M2 | M3 | M4 | M5 | M6 | M7 | M8 | M9 | M10 | M11 | M12 | TOTAL |
|---|---|---|---|---|---|---|---|---|---|---|---|---|---|
| TRAYS | 496 | 488 | 488 | 488 | 496 | 496 | 496 | 501 | 511 | 511 | 519 | 519 | 6008 |
| COMP. KITS | 679 | 479 | 479 | 479 | 480 | 480 | 480 | 481 | 481 | 481 | 483 | 486 | 5968 |
| ORTHO. TIPS | 367 | 246 | 243 | 243 | 245 | 243 | 243 | 245 | 243 | 243 | 245 | 243 | 3038 |

* =GENERAL RELEASE DATE
=NUMBERS BASED ON 1998 SALES DATA
=NUMBERS ARE REPRESENTED IN BOXES FOR NEW SYSTEM
=Evaluation samples=2000 each: 750=Fan Spray Kit; 750 Shower Spray Kit; 500 Hip Kit

| DESCRIPTIONS: | | |
|---|---|---|
| TRAYS: (W/TIPS) | COMP. KITS: (W/O TIPS) | TIPS: |
| 5160-100 | 5150-20 | 5150-75 |
| 5160-101 | 5150-28 | -96 |
| 5150-200 | 5150-36 | -82 |
| 5150-775 | 5150-300 | -83 |
| 5150-795 | 5150-301 | -84 |
| 5150-752 | 5150-720 | -61 |
| | | -85 |

*PULSAVAC AT RISK*

| YEAR 1 (210 ACCOUNTS) | M1* | M2 | M3 | M4 | M5 | M6 | M7 | M8 | M9 | M10 | M11 | M12 | TOTAL |
|---|---|---|---|---|---|---|---|---|---|---|---|---|---|
| TRAYS | 27 | 27 | 27 | 27 | 27 | 27 | 27 | 27 | 27 | 27 | 27 | 27 | 324 |
| COMP. KITS | 393 | 393 | 393 | 393 | 393 | 393 | 393 | 393 | 393 | 393 | 393 | 393 | 4716 |
| ORTHO. TIPS | 230 | 230 | 230 | 230 | 230 | 230 | 230 | 230 | 230 | 230 | 230 | 230 | 2760 |

* =GENERAL RELEASE DATE
=NUMBERS BASED ON 1998 SALES DATA

*SWAP-OUT PRODUCT*

| YEAR 1 | M1* | M2 | M3 | M4 | M5 | M6 | M7 | M8 | M9 | M10 | M11 | M12 | TOTAL |
|---|---|---|---|---|---|---|---|---|---|---|---|---|---|
| TRAYS | 14 | | | | | | | | | | | | 14 |
| COMP. KITS | 197 | | | | | | | | | | | | 197 |
| ORTHO. TIPS | 114 | | | | | | | | | | | | 114 |

* =GENERAL RELEASE DATE
=NUMBERS BASED ON 1996 SALES DATA

*VAR-A-PULSE AT RISK*

| YEAR 1 | M1* | M2 | M3 | M4 | M5 | M6 | M7 | M8 | M9 | M10 | M11 | M12 | TOTAL |
|---|---|---|---|---|---|---|---|---|---|---|---|---|---|
| TRAYS | 454 | 454 | 454 | 454 | 454 | 454 | 454 | 454 | 454 | 454 | 454 | 454 | 5448 |
| COMP. KITS | 59 | 84 | 84 | 84 | 84 | 84 | 84 | 84 | 84 | 84 | 84 | 84 | 1013 |
| ORTHO. TIPS | 13 | 13 | 13 | 13 | 13 | 13 | 13 | 13 | 13 | 13 | 13 | 13 | 156 |

* =GENERAL RELEASE DATE
•NUMBERS BASED ON 1996 SALES DATA

*INCREMENTAL BUSINESS*

| YEAR 1 | M1* | M2 | M3 | M4 | M5 | M6 | M7 | M8 | M9 | M10 | M11 | M12 | TOTAL |
|---|---|---|---|---|---|---|---|---|---|---|---|---|---|
| TRAYS | 0 | 7 | 7 | 7 | 15 | 15 | 18 | 20 | 30 | 30 | 38 | 38 | 222 |
| COMP. KITS | 0 | 2 | 2 | 2 | 3 | 3 | 3 | 4 | 4 | 4 | 6 | 6 | 42 |
| ORTHO. TIPS | 0 | 2 | 0 | 0 | 2 | 0 | 0 | 2 | 0 | 0 | 2 | 0 | 8 |

* =GENERAL RELEASE DATE
=NUMBERS BASED ON 1996 SALES DATA

5% increase in forecast on all other new business after general release

*INTERNATIONAL BUSINESS*

| YEAR 1 | Feb 20' M1* | M2 | M3 | M4 | M5 | M6 | M7 | M8 | M9 | M10 | M11 | M12 | TOTAL |
|---|---|---|---|---|---|---|---|---|---|---|---|---|---|
| TRAYS | | | | | | | | | | | | | 0 |
| COMP. KITS | | | | | | | | | | | | | 0 |
| ORTHO. TIPS | | | | | | | | | | | | | 0 |

**INTERNATIONAL + 20%**

* = RELEASE DATE FOR REGIONS

| REGIONS: | |
|---|---|
| CANADA | X |
| AUSTRALIA/NZ | X |
| EUROPE | X |
| KOREA | |
| TAIWAN | |
| JAPAN | |
| SINGAPORE/ REST OF ASIA | X |
| LATIN AMERICA | X |
| CEE/EXPORT COUNTRIES | X |

**TRIP REPORT: 4/5-4/7=PulsaJet**
**Research Project**
**Phil Stein/Tim Donaldson**

The *purpose* of this trip was to ensure that we, the PulsaJet design team, satisfied all of the points on the rationale, which was uncovered from the field and accounts regarding the current Zimmer battery system: Var-A-Pulse. We keyed in on the following pieces of the project: 1.) design of the handpiece, 2.) battery pack, 3.) power in each of the two settings, 4.) tips, 5.) tip retaining mechanism, 6.) pricing if possible, 7.) public relations for this project and PCD, 8.) any other miscellaneous information, and 9.) trigger mechanism.

*Areas visited:* Zimmer Maxon: Jackie Ross, an ex-PCD FMS, various associates, sales management and clinical personnel-OR nurse.

Zimmer Carolinas: Gary Cobb, an ex-PCD FMS, Mark Osbourne, various OR personnel, including ortho techs, scrub nurses, circulation nurses, and two Traumatologists (one was Dr. Goetz).

*Results of the trip:*

1.) All associates, including Gary Cobb and Jackie Ross who have both been close to the Zimmer, Stryker and Davol lavage units for many years, all approved the design of the handpiece. The consensus was, "it is ergonomic and aesthetically pleasing. Additionally and most important, all of the clinical people we spoke with all approved the gun-shaped design.

2.) Battery pack: approval from all. Battery pack external to the handpiece received very positive comments.

We also heard of many accounts from the accounts that the Var-A-Pulse handpieces split apart when tips are put on. We will be addressing this with the batteries out of the handpiece and many clips around the unit.

3.) The new tip was especially of interest to Dr. Goetz, who is a leading traumatologist and is very concerned with flow rates and pressure. This new "trauma tip" will provide more flow at less pressure. We believe that this tip will become very popular in what we believe will be a new and growing market for this system, the trauma market. Phil will be researching papers discussing this topic. Furthermore, more tips like this one might need to be looked at. (Dr. Burgess spoke on this topic at the 1998 Vail Meeting).

Another tip that, by discussions with the associates and clinicians, that will be required for the PT market, is a flexible, narrow and long tip with graduations. Davol has released a tip like this and is taking business with it.

4.) Retaining clip for the tips: This was another large issue with the field and with ALL the OR staff we presented to. This new clip was approved-in theory.

5.) ALL associates and hospital personnel we spoke with mentioned reliability. This system must work EVERY time it is turned on and off with absolutely no leaking. The new design will address this issue.

6.) This meeting, and others with associates in the office, alerted us to the fact that we must not forget the PT department. This area constitutes a great deal of dollars to the associates, especially in the Carolina territory, and positive PR within their accounts. Stryker and Davol have been aggressively pushing their way into our accounts. The Var-A-Pulse has been working well in many PT/Rehab units due to its convenience and portability.

There was not any doubt that the upper speed will be too high for PT applications; however, the lower speed/PSI is still of some concern for various applications. It must be low enough to use in the ER area and most importantly, even lower in the PT department. Tim and Phil discussed various options: 3 speeds, a middle speed, the low PSI level, or a battery pack containing less batteries which will enable the user to release less PSI with 2 Speeds=the "PulsaJet PT". This will be a very important issue to review with the design group and management.

7.) Trigger: We presented 2 choices for evaluation. One was a toggle with 3 detents (high, low and off) and one was a squeeze trigger that changes to high and low with a locking button. Many of the people we met with, found both to be acceptable, but the toggle received most of the positive choices. The decision of where the high, low and off will be in the trigger is still to be decided, however, Dr. Goetz made the point of the off on the bottom to ensure that when the handpiece will be handed off, there will not be any accidental ignition.

*Conclusion:*

All associates are very anxious to have this product released and able to sell new business and re-convert all of their old business converted by Stryker and Davol. We mentioned that the evaluations will start around the end of the summer or beginning of August 1999. Needless to say, everyone wanted the product as soon as possible. Two accounts we met with were on their way to leaving Zimmer or converting from Davol or Stryker. Both will hang on for the new system and in Kansas City, this new system will enable Zimmer Maxon to convert a series of 12 accounts, many not currently Zimmer lavage accounts. ** Reliability must be a given for any of the above excitement to occur **.

Overall, this was a very positive trip and uncovered important areas for our group to consider and most importantly, it provided us with a sense that we are on the right way to a successful product for Zimmer, the PULSAJET.

**H.M. Design, Inc.**
**3681 Manchester Rd.**
**Room #303**
**Akron, Ohio 44319**
**(330) 644-9616**
**Fax (330) 644-9619**

Attn.: Mr. William J. Donizetti — January 25, 1999
Mr. Tim Donaldson
Zimmer Patient Care Division
200 West Ohio Avenue
P.O. Box 10
Dover, Ohio 44622

**Objective:**

Our mission is to assist Zimmer Patient Care in recapturing the lost sales, product reliability, sales force confidence, and performance leadership from competitors such as Stryker by providing successful VAR-A-PULSE product design and functionality.

**Discussion:**

- To develop a VAR-A-PULSE product to be ready for sale by the end of 1999 and ready for the 2000 Academy medical show.

- The new design will have an ergonomic and a totally new appearance to the design.

**Scope of services:**

This proposal contains the following key performance periods:

1. Preliminary concept development/ component research.

2. Concept refinement/ dimensional design control drawings/ appearance model.

3. Engineering design.

4. Prototyping.

5. SLA/SLS review and revisions.

6. Engineering documentation.

7. Tooling quotation.

8. Tooling engineering/fabrication.

9. Tooling/Product debug.

**Phase #1:** Preliminary concept development/ component research phase.

**Orientation:**

A briefing meeting will be held to accomplish the following:

- Allow Zimmer personnel to demonstrate the proper usage, problems and advantages of both the VAR-A-PULSE and competitive units.

*Note: It is imperative that a clearly defined set of marketing objectives be created to insure all design intent is met from the onset of this project. Items such as batteries, ergonomics of product, options for pressure settings, QA inspection, and also manufac-

tured price point are examples of information required prior to starting this program.

**Design illustrations:**

H.M. Design, Inc. will prepare approximately (4) to (6) preliminary design recommendations in the form of accurately sized colored illustrations to resolve the following issues:

- Totally new appearance to announce the introduction of a new and improved performance.
- Ergonomic form development to facilitate the required usage technique.
- Surface detail for a secure grip.
- Visual detailing will be incorporated to trigger the quality perception so as to overcome the disposable reality.
- Part configuration to support the alternative component assembly recommendations and cost targets.

**Preliminary models:**

Each design illustration will be supported with preliminary models to offer an initial 3-d evaluation of basic proportion and handling utility.

**Internal component research:**

Due to the complexity of the overall mechanical function and the potential for revisions to the current configuration, internal components will be researched

concurrently with this phase to insure industrial design is realistic in size, shape, and function.

**Phase review meeting:**

A review meeting will be held to select the features judged to be most effective in anticipation of a composite design phase.

**Estimated phase cost:** $24,000
**Estimated phase delivery:** (2 1/2) Weeks.

**Note:** Upon determination of preliminary configuration of internal pump mechanism components, it will be necessary to produce rapid prototype components as early as possible to insure integrity of design concepts and schedule. Due to the extreme importance of maintaining schedule it is imperative that engineering prototypes are developed as early as possible to help minimize the product development timeline.

**Estimated phase #1 form model budget: $4,000**

**Zimmer Patient Care Division evaluation phase:**

A review meeting will be held with the customer to review form models. At this point the customer must evaluate the models and supply H.M. Design, Inc. with direction in order to proceed into the next phase of product development.

**Estimated time:** 3 Days

**Phase #2:** Concept refinement/dimensional design control drawing/ appearance model phase.

The objective of this phase is to reach an early forecast of production and provide a confident static evaluation model prior to incurring detailed engineering and while there is time for management reaction and revisions.

**Concept refinement illustration:**

The features selected from the range of preliminary designs and any new considerations will be combined and thoughtfully resolved into a final design illustration for Zimmer Patient Care approval to proceed.

**Dimensional design control drawings:**

The external design features will be dimensionally recorded to serve as a model fabrication drawing and to allow engineering to begin accurate layouts and cost estimations.

**Appearance model development:**

A static visual model will be prepared to allow the Zimmer Patient Care development team, management and key accounts to evaluate the intended production appearance, size, weight, and handling convenience. This model will be usable for promotional photography.

**Estimated phase cost:** $14,000
**Estimated phase delivery:** (2 1/2) Weeks.

**Estimated phase #2 appearance model budget:** $8,000

**Zimmer Patient Care Division approval phase:**

A meeting will be held with the customer to review the appearance model. The customer will then have the opportunity to review the model with their sales force and potential customers for any additional recommendations on the design.

**Estimated phase:** (1) Week.

**Phase #3:** Engineering design phase.

**Preliminary component determination, cost and development:**

Per approved styling concept from phase #2. components will be 3d modeled in Pro/ Engineer, assembled, and basic 2d documents will be created for review prior to prototyping.

The following items will be addressed in this phase:

- Housings configuration.
- Internal component configuration.
- Location and assembly of all internal components.
- Material specifications of all components.
- Preliminary specification of all purchased components.
- Preliminary costing of manufactured product.

*Note: H.M. Design, Inc. offers the option of design of electronics if product redesign requires such services and will provide a quotation for this development upon request. We will require Zimmer Patient Care to supply all current motor, electronic information and sample components. H.M. Design, Inc. be responsible for providing mechanical solutions to how these components will function and be assembled in manufacturing.

- Upon approval of assembly and component configuration, basic 2d documents will be created and provided via. CD or e-mail; in IGES or DXF format and (1) set of vellums to Zimmer Patient Care. Component drawings will have overall dimensions and volume of material for gathering tooling/ molding quotes.

- A risk analysis will be performed with guidance from Zimmer Patient Care Division on each component part to determine any potential manufacturing problems prior to releasing product for tooling.

**Estimated cost:** $42,000
**Estimated delivery:** (9) Weeks.

**Phase #4:** Prototype phase.

H.M. Design, Inc. will supervise and coordinate all prototype sources for gathering quotations, and to insure quality of prototypes and integrity of schedule.

H.M. Design, Inc. will utilize the Zimmer Warsaw prototyping facility when possible to minimize prototyping cost. However, if scheduling becomes a conflict

other prototype recourses will be utilized to maintain the schedule.

**Engineering model:**

Model / Pattern makers will be utilized during this phase to fit and aid in the debug of the prototype units.

- H.M. Design, Inc. will supervise model fabrication and review all prototype components prior to delivery of model to Zimmer Patient Care Division.

- Various prototyping options and quotations will be presented based on creating a functional/ aesthetic model prior to releasing components for fabrication of production tooling.

**Estimated engineering supervision cost:** $3,000
**Estimated phase delivery:** (2) weeks

**Estimated engineering model cost:** $4,000 per model.

**Phase #5:** SLA / SLS Review and revisions.

**Engineering model review / Component revisions.**

*It is important to note that the debugging of the product design performance may require the fabrication of multiple prototype units prior to releasing for production tooling.

- Based on the results of the prototypes, the components will be modified and revised as necessary.

- Final prototypes will be reviewed with Zimmer Patient Care Division prior to release for prototype field-testing.

**Estimated supervision cost:** $3,000
**Estimated phase delivery:** (2) weeks.

**Estimated additional model cost:** $2,000 per model.

**Phase #6:** Engineering documentation phase.

- Based on results of prototyping phase, 3D models will be revised as necessary prior to detailing.

- 2d documentation will be created of all components designed by H.M. Design, Inc. for fabrication of production tooling. It is assumed that all tooling will be created utilizing 3d Pro/ Engineer data thus, component documentation will consist of overall dimensions and key fits needing to be checked in quality assurance inspection of components during manufacturing. If complete 2d documentation of components is required, additional cost will be quoted to Zimmer Patient Care Division at this time.

- Assembly drawings will be created with bill of materials.

- All final documentation will be supplied as (1) set of vellums, I.G.E.S. or DXF format of 2d

data and all 3d data will be delivered as Pro/ Engineer models; I.G.E.S. or DXF format via. CD or e-mail to Zimmer Patient Care and toolmaker of choice.

**Estimated phase cost:** $6,000
**Estimated phase delivery:** (2-3) Weeks.

**Phase #7:** Tooling quotations.

- Mold quotation specification sheets will be created and reviewed prior to release for quotations. To insure optimum tooling configuration based on supplied estimated production quantities, and to insure uniformity in submitted quotations.

- Upon approval of tooling specifications, Mold quotations will be obtained for review and approval with Zimmer Patient Care Division.

- A mold report summary will be submitted to Zimmer Patient Care Division. This report will list all mold makers, cost, and delivery of each mold.

**Estimated phase cost:** $3,000
**Estimated phase delivery:** (1) Week.

**Phase #8:** Tool Engineering / Fabrication phase.

To monitor tooling development, to insure the integrity of the schedule and quality of production tooling.

Upon the selection of tooling venders and the release for tooling the follow items will be addressed:

- Preliminary tool design review will be held between the molder and the toolmaker and H.M. Design, Inc.

- Periodic visits will be made to the toolmakers to insure the integrity of the tooling and the schedule.

- A report will be submitted monthly on the status of each mold.

**Estimated phase cost:** $11,000
**Estimated phase delivery:** (12) Weeks.

**Phase #9:** Tooling / Product debug.

Upon completion of production tooling the following items will be addressed:

- Production sampling will be monitored to insure optimum part quality and cycle time. Recommendations will be made for any proposed revisions to tooling prior to production molding.

- All tooling revisions will be monitored to insure integrity of production tooling and schedule.

**Estimated phase cost:** $6,000
**Estimated phase delivery:** (3) Weeks.

**Summary:**

| | | |
|---|---|---|
| **Phase #1:** Preliminary concept development / component research. | $24,000 | 3 weeks |

| | | |
|---|---|---|
| **Zimmer Patient Care Division evaluation phase:** | | 1 week |
| **Phase #2:** Concept refinement / Control drawing. | $14,000 | 3 weeks |
| **Zimmer Patient Care Division approval phase:** | | 1 week |
| **Phase #3:** Engineering design phase. | $42,000 | 9 weeks |
| **Phase #4:** Prototype phase | $3,000 | 2 weeks |
| **Phase #5:** SLA / SLS Review and Revisions. | $3,000 | 2 weeks |
| **Phase #6:** Engineering documentation phase. | $6,000 | 2-3 weeks |
| **Phase #7:** Tooling quotations. | $3,000 | 1 week |
| **Phase #8:** Tool engineering / fabrication phase. | $11,000 | 12 weeks |
| **Phase #9:** Tooling / Product debug. | $6,000 | 3 weeks |
| **Estimated Engineering Budget:** | **$112,000** | **40 weeks** |

| | |
|---|---|
| **Phase #1:** Model budget. | $4,000 |
| **Phase #2:** Model budget. | $8,000 |
| **Phase #4:** Model budget. (One model only) | $4,000 |
| **Phase #5:** Model revision budget. (One model only) | $2,000 |

| Estimated Model Budget: | $18,000 |
|---|---|

**Estimated project budget total:** **$130,000**

**Items required prior to project start:**

- Samples of competitive units.
- Signed acceptance of this quotation and purchase order.
- Existing prototypes and engineering documentation available.
- Sample motors and existing components available for prototypes.
- List of specific marketing objectives/ specifications and estimated price point.

We would like to thank you for allowing us the opportunity to submit this quotation and look forward to working with you on this program.

Sincerely

Detlev F. (Frank) Smith
President

Donald R. Wright
Vice President

**Terms:**

Any additional project management activities will be billed on a time and material basis at $50/hr. with prior approval of the customer.

All Prototype and production tooling costs will be billed directly to the customer by the vendors providing those services.

Travel expenses will be billed separately with prior approval of the customer.

Any changes to product design or project criteria may affect delivery and cost.

Our product design will reflect a sincere effort to be error free and will be checked prior to release to the customer, who will assume the responsibility for final approval and release to tooling.

This quotation will remain valid for a period of 30 days.

Expenses are billed monthly and are due net 15 days.

Late payments are subject to a 2% late fee after 10 days. (24% per year.)

All applicable patent information, U.L. approvals, product testing, and liabilities remain the customer's responsibility.

(Customer's name):
Accepted by:

_____

_____

Title

_____

Date

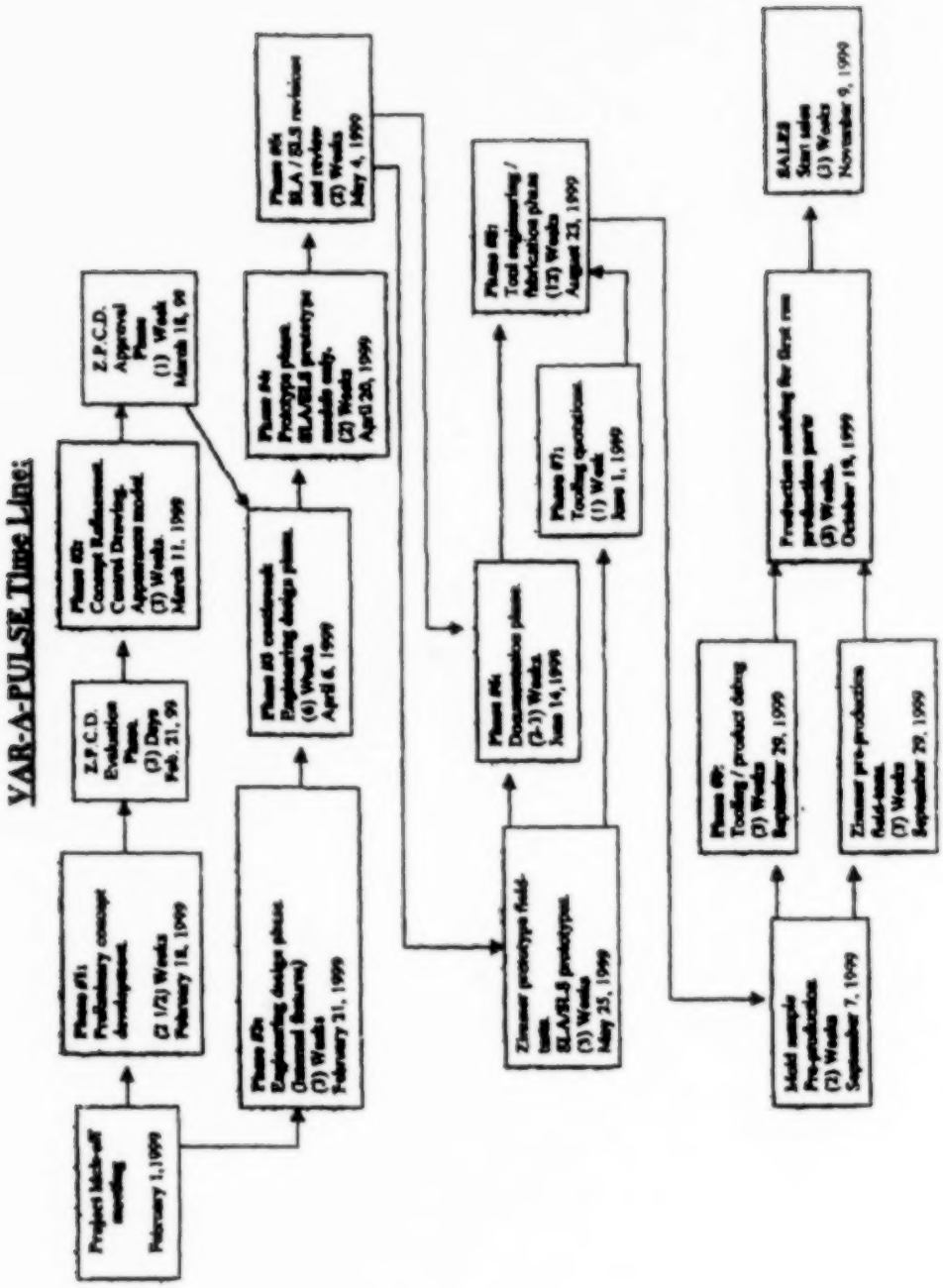
VAR-A-PULSE Time Line:
Project kickoff meeting
February 1, 1999
Phase #1:
Preliminary concept development.
(2 1/2) Weeks
February 18, 1999
Phase #2:
Engineering design phase.
Optional features)
(3) Weeks
February 21, 1999
Z.P.C.D. Evaluation Phase.
(3) Days
Feb. 21, 99
Phase #3:
Engineering design phase.
(6) Weeks
April 4, 1999
Phase #3 continued:
Engineering design phase.
(6) Weeks
April 4, 1999
Phase #5:
Concept Refinement.
Control Drawing.
Appearance model.
(3) Weeks.
March 11, 1999
Z.P.C.D. Approval Phase.
(1) Week
March 18, 99
Phase #4:
Prototype phase.
SLA/SLS prototype models only.
(2) Weeks
April 28, 1999
Phase #4:
SLA / SLS revision and review
(2) Weeks
May 4, 1999
Zimmer prototype fluid tests
SLA/SLS prototypes
(3) Weeks
May 25, 1999
Phase #6:
Documentation phase.
(2-1) Weeks
June 14, 1999
Phase #7:
Tooling quotation.
(1) Week
June 1, 1999
Phase #8:
Tool engineering / fabrication phase
(12) Weeks
August 23, 1999
Model sample Pre-production
(2) Weeks
September 7, 1999
Phase #9:
Tooling / product debug
(5) Weeks
September 29, 1999
Zimmer pre-production fabrication
(5) Weeks
September 29, 1999
Production molding for first run production parts
(3) Weeks.
October 19, 1999
SALES
Start sales
(3) Weeks
November 9, 1999

**H.M. Design, Inc.**
**3681 Manchester Rd.**
**Room #303**
**Akron, Ohio 44319**
**(330) 644-9616**
**Fax (330) 644-9619**

Attn.: Mr. Tim Donaldson
Zimmer Patient Care
200 West Ave.
Dover, Ohio 44622

January 29, 1999

**Subject:** 1-29-99 meeting minutes.

**Attending:**

Mr. Tim Donaldson - Zimmer Patient Care
Mr. Bill Donizetti - Zimmer Patient Care
Mr. Donald Wright - H.M. Design, Inc.
Mr. Rick May - H.M. Design, Inc.
Mr. Bill Brazis - H.M. Design, Inc.

Per our 1-29-99 meeting at Zimmer Patient Care, the following items were concluded:

- The current market for wound debridement systems is making a transition from capital equipment to less expensive and more space efficient battery operated units.

- The current understanding of the user's perception of product quality, in comparison to other competitive units, tends to key in on Fluid pressure. The current VAR-A-PULSE unit has more power or pressure than any of the competitive units, but the quality perception is a combination of impact, shot size or speed of

saline use and in some respects the actual noise level of the unit. It must be noted that the product should not be designed to eliminate motor/ mechanical noise.

- A key selling feature for the operating room purchasing agent is the fact that the unit contains (8) AA batteries that are typically removed from the unit for personal use prior to disposing of unit. Batteries should be secure but easily removable.

- Trigger design should be located for finger activation similar to a handgun, thumb operation has been described as awkward. Trigger mechanism should allow for (2) speeds: a (4) battery and a (8) battery speed. Trigger should also be lockable in both positions for a extended use during surgery.

- Product currently utilizes (8) styles of spray tips, new product must be able to accept all of the current spray tips with no revision to current tip design to avoid compatibility problems with product already in the field. New product design should eliminate the problem of spray tips detaching from gun during use, while allowing for the replacement of tips during surgery in a timely fashion.

- Current gun design has been described as "bottom heavy" due to location of batteries, a more balanced unit should be a development goal. It should also be noted that the current design does not fit into pockets of skirts utilized in surgery thus the gun is often placed on the pa-

tient when not in use and has a tendency to fall off to the floor.

- Batteries may be remotely located for better gun balance, design cannot have tubes run through the battery box, due to current Stryker patents, but may be fastened to the outside. It must also be noted that Zimmer Patient Care does not have the capability to coextrude the wiring with the tubing as seen on competitive units therefore this type of design would have to be verified with the research of vendors and cost estimation of manufacturing and assembly. It may also be possible to have a separate wire and mount batteries to a belt clip unit or placed on the floor of the operating room.

- Fasteners or screws should be avoided in the design to minimize cost and assembly. Also, several components will be sonic welded and meticulous attention to energy director design must be taken into consideration due to past problems with leaks due to poor welds.

- Units cannot leak, saline solution tends to react quickly with batteries and electronics causing corrosion and expulsion of a black fluid which is unacceptable to product performance. For this reason, all contacts should be minimized in size to avoid exposure to saline.

- Product does not need to be waterproof, but should be extremely water resistant. Normal product use dictates that the unit should not be

submerged and warns users of this on packaging.

- Normal product use is about a (5) minute timeframe, product must run for (15) minutes in testing on batteries, the current unit runs for about (45) minutes.

- Units will be sterilized either with gamma or ETO.

- Current supplied prototype uses a dual valve configuration taken from a Stryker unit, in final design concept this will have to be separate components due to existing competitor patent.

**Items required for the progression of product development:**

- Any available video documentation of actual product and/ or competitor product use, storage, etc.

- Engineering documentation and bill of materials on current VAR-A-PULSE unit.

- Engineering documentation and sample parts of all (8) VAR-A-PULSE nozzles.

- Information on any motors, gears, purchased components already researched and sample parts if available.

- Next production run of VAR-A-PULSE assembly at Zimmer Patient Care schedule for evaluation of production equipment and practices by H.M. Design, Inc.

- An operation room use of the VAR-A-PULSE and/ or competitive unit demonstration. We would like to be able to have (3) people present, permission to photograph activity, and would also like to encourage this activity to be held locally to minimize travel expenses.

Please review and confirm the information in this document. Our intent is to insure the accuracy of all information passed on to us, therefore proper review and timely reply to this document will be greatly appreciated.

Thanks,

Donald Wright
H.M. Design, Inc.

**H.M. Design, Inc.**
**3681 Manchester Rd.**
**Room #303**
**Akron, Ohio 44319**
**(330) 644-9616**
**Fax (330) 644-9619**

**Attn.:** Mr. Tim Donaldson
Zimmer Patient Care
200 West Ave.
Dover, Ohio 44622

February 17, 1999

**Subject:** 2-15-99 and 2-16-99 meeting minutes.

**Attending:** 2-15-99 Meeting
Mr. Todd Martin - Zimmer Patient Care
Mr. Rick May - H.M. Design, Inc.
Mr. Frank Smith - H.M. Design, Inc.

**Attending:** 2-16-99 Meeting
Mr. Tim Donalson-Zimmer Patient Care
Mr. Rick May - H.M. Design, Inc.
Mr. Frank Smith - H.M. Design, Inc.
Mr. Roger Ramsey - H.M. Design, Inc.

Per our 2-15-99 meeting at H.M. Design, Inc., the following items were concluded:

- A product development history was recapped with Todd Martin to review the findings and engineering criteria that was established by Zimmer Patient Care over the past 1 ½ years.

- The inlet hose I.D. was the driving force to determine the best pump and piston configuration. The main criteria was to eliminate as many flow restrictions and still achieve a velocity of 2000ml of fluid per min.

- The present prototyped pump will drive approximately 1380ml./min.

- The current prototype has ½" of travel for the piston on the pump mechanism.

- There is an 8:1 gear ratio between the large pump gear (80 teeth) and the small drive gear (10 teeth).

- A metal gear shaft will need to be used on the pump gear, because of the heat buildup from the high number of RPMs from the motor. This was a problem that the competition (Stryker) had and was resolved with a metal shaft.

- A duckbill valve will be used for the irrigation port of the pump. This valve was chosen because of the pulsating feel it gives to the saline solution during operation.

- If leaking from the tip appears to be a problem the duckbill valve will be replaced with a preloaded duckbill valve.

- Todd martin will fax H.M. Design, Inc., the pressure specifications for determining the proper valves to use.

- The pump should be located as close to the tip connector as possible. This will help reduce the amount of leaking fluid form the tip of the device.

- The current prototype utilizes (l) O-ring. The new design will be started with (2) O-rings to minimize the leaking. Depending on cost a quad ring may be utilized.

- It was advised by Todd Martin that an in line fuse be added to the assembly to prevent the motor from overheating and possibly injuring the operator.

Per our 2-16-99 meeting at H.M. Design, Inc., the following items were concluded:

- There will be no designs with the batteries in the handle. This information was arrived from customer input from the Academy show and this is what the competition is currently during with their design.

- The battery pack will be (2) rows of (4) batteries. The battery pack will have a hook and approximately 4ft. of wire to attach to the gun.

- There will be no wire connector to the battery pack as on the Stryker gun.

- The design team will look into adding an in-line fuse to the electronics for safety.

- **The existing tips must be utilized for this design.** The design will utilize the tapered press fit without any O-rings. The design team will develop a locking mechanism to help retain the existing tip design.

- Marketing and sales input / direction to the following design concepts.

  - In general a "rectilinear shape" was preferred.

  - No pivoting mechanism to the handle. Price point is too sensitive for this feature.

  - Design concept #1: Was the least preferred. Marketing and sales did like the rib design features in the handle.

  - Design concept #5: Was liked, but will need to remove the protrusion for the motor.

  - Design concept #6: Need a form model to help understand the concept of the shape and multiple hand positioning. There are some concerns that the design may look too much like the competition.

  - Design concept #2: One of the favorite designs. Needs a larger trigger.

  - Design concept #3: One of the favorite designs. Liked the large trigger but not this large. Marketing preferred the horizontal design feature line for use as an improved grip when holding the gun by the back instead of the handle.

- Keep all handles as small as possible. Note that the trigger mechanism and the tubing may drive the size of the handle.

- The preferred cycle for the trigger operation is as follows:

  - Low to high speed by squeezing the trigger and having a secondary speed lock. This is the same way the Stryker unit operates.

  - The concept of the electronic switch was liked. If the price of the switch is comparable to the contacts on the existing unit. Marketing did not like the cycling of the electronics; Marketing did not want the operator to cycle through high to turn off the unit.

- The next meeting will be at Zimmer Patient Care in Dover, Ohio. Wednesday February 24, 1999 at 10:00 am.

**Items required for the progression of product development:**

- Todd Martin to fax H.M. Design, Inc., the pressure specifications for determining the proper valves to use in the design of the pump.

- Existing documentation on the Var-a-pulse pump components and a sample of non-assembled components.

Please review and confirm the information in this document. Our intent is to insure the accuracy of all information passed on to us, therefore proper review

and timely reply to this document will be greatly appreciated.

Thanks,

Frank Smith
H.M. Design, Inc.

**IN THE UNITED STATES PATENT AND TRADEMARK OFFICE**

Applicant: Arnett et al. Art Unit: 3767

App. No: 11/563,504 Examiner: Bumgarner, M.N.

Filed: 27 NOV 2006 Conf. No.: 1074

Title: SURGICAL/MEDICAL IRRIGATING HANDPIECE WITH VARIABLE RATE PULSE PUMP, VARIABLE SPEED MOTOR FOR ACTUATING THE PUMP, INTEGRATED SUCTION AND REMOTE BATTERY PACK

RESPONSE TO OFFICE ACTION

This paper is submitted in response to the Office Action for the above-identified application mailed 3 December 2010. This Response is submitted simultaneously with a Request For Continued Examination for the application.


| | Page |
|---|---|
| Amendments to the Claims | 2 |
| Remarks | 10 |

Amendments To The Claims

The following is a complete listing of all claims presently in this application, including the Previously Presented claims and statements identifying the claims amended by way of this Response.

Claims 1-30 (Canceled).

31. (Original) A medical irrigator comprising:

a housing shaped to be hand held and having a front end, the front end having a fluid outlet opening;

a tip assembly that extends forward from the front end of said housing, said tip assembly having an outlet tube in fluid communication with the housing fluid outlet opening and a suction tube;

an inlet tube extending to said housing;

a pulse pump capable of operating at a variable rate disposed in said housing that opens to the housing front end, said pump configured to receive fluid from said inlet tube and discharging the fluid through the fluid outlet opening;

a single electric motor disposed in said housing and connected to said pump for actuating said pump, said motor operable at variable speeds to control the pumping rate of said pump;

a control assembly disposed in said housing to regulate the speed of said motor;

a flexible suction tube that is in fluid communication with said tip assembly suction tube and that extends away from said housing;

a battery pack separate from said housing; and

a flexible conductor assembly extending from said battery pack to said housing for supplying energy stored in said battery pack to said motor.

32. (Original) The medical irrigator of Claim 31, wherein said control assembly has a switch that is moveably mounted to said housing, said control assembly configured so that:

when said switch is in a first position, said control assembly does not supply an energization signal to said motor;

when said switch is in a second position, said control assembly supplies a first energization signal from said battery pack to said motor; and

when said switch is in a third position, said control assembly supplies a second energization signal from said battery pack to said motor.

33. (Currently Amended) The medical irrigator of Claim ~~31~~ 32, wherein said switch is configured to move:

from the first position and to the second position; and

from the second position to the third position.

34. (Currently Amended) The medical irrigator of Claim 31, wherein:

said housing is formed to have: a handle; and a barrel integral with and located above said handle that extends forward from said handle, said barrel ~~having~~ being shaped to form the housing front end including the housing fluid outlet opening; and

said motor is located in said housing handle.

35. (Previously Presented) The medical irrigator of Claim 31, wherein said tip assembly suction tube surrounds said tip assembly outlet tube.

36. (Original) The medical irrigator of Claim 31, wherein said inlet tube extends from said battery pack to said housing.

37. (Currently Amended) The medical irrigator of Claim 31, wherein:

the housing front end is formed with a fluid inlet opening;

said tip assembly suction tube is connected to the housing fluid inlet opening;

a suction hose is disposed in said housing and extends from the housing fluid inlet opening and to said flexible suction tube ~~is connected~~ so that said suction hose provides a fluid communications path from said tip assembly suction tube to said flexible suction ~~hose~~ tube.

38. (Original) The medical irrigator of Claim 31, wherein said housing and said tip assembly are

formed with complementary features for releasably holding said tip assembly to the housing front end.

39. (Currently Amended) A medical irrigator comprising:

a housing shaped to have a front end;

a pulse discharge pump that operates at a variable rate disposed in said housing having an inlet and discharge conduit, the discharge conduit opening towards the front end of said housing;

an inlet line that extends into said housing that is in fluid communication with the pump inlet;

a single electric motor disposed in said housing and connected to said pump to actuate said pump, said motor operating at variable speeds to regulate the pumping rate of said pump;

a tip assembly that extends from the front end of said housing, said tip assembly having an outlet tube that is in fluid communication with the pump discharge conduit and a suction wand;

a flexible suction tube that is in fluid communication with said tip assembly suction wand;

a battery pack separate and spaced from said housing that contains at least one battery that stores energy for energizing said motor;

a flexible cable that extends from said battery pack to said housing for supplying energy from said battery pack to said motor; and

a control assembly integral with said housing to which said cable is connected, said control assembly having a switch member moveably mounted to said housing and said control assembly being configured to apply a variable energization signal from said battery pack to said motor so as to control the speed of said motor and regulate the pumping rate of said pump.

40. (Previously Presented) The medical irrigator of Claim 39, wherein:

said cable includes a first conductor over which a first energization signal is available from said battery pack and a second conductor over which a second energization signal is available from said battery pack; and

said control assembly is configured so that said switch member can be selectively positioned to: connect neither of said cable conductors to said motor; connect the first said cable conductor to said motor; or connect the second said cable conductor to said motor.

41. (Original) The medical irrigator of Claim 40, wherein said control assembly is configured to sequentially move from the position in which neither said cable conductors are connected to said motor to the position in which said first cable conductor is connected to said motor and to the position in which the second said cable conductor is connected to said motor.

42. (Original) The medical irrigator of Claim 39, wherein said pump is a reciprocating pump.

43. (Original) The medical irrigator of Claim 39, wherein said inlet line extends from said battery pack to said housing.

44. (Original) The medical irrigator of Claim 39, wherein said tip assembly is constructed so that said outlet tube is disposed in said suction wand.

45. (Original) The medical irrigator of Claim 39, wherein:

a suction hose having opposed ends is disposed in said housing;

said suction wand is connected to a first end of said suction hose; and

said flexible suction tube is connected to a second end of said suction hose.

46. (Original) A medical irrigator, said irrigator comprising:

a housing having a front face;

a tip assembly that extends from the front face of said housing, said tip assembly including an outlet tube and a suction wand;

a pulse discharge pump disposed in said housing that operates at a variable rate, said pump having an inlet and an outlet, the outlet opening into the front face of said housing so as to be in fluid communication with said tip assembly outlet tube;

a flexible suction tube that is in fluid communication with said tip assembly suction wand, said flexible suction tube extending away from said tip assembly;

a single, variable speed electric motor disposed in said housing connected to said pump for actuating said pump at variable rates;

a battery pack separate from said housing containing at least one battery;

a flexible cable that extends from said battery pack to said housing, said flexible cable having at least one conductor over which an energization signal from said at least one battery is supplied; and

a control assembly attached to said housing and connected between said at least one conductor and said motor for supplying a variable potential energization signal to said motor, said control assembly having a single switch member that is moveably attached to said housing that selectively makes/breaks a connection between said at least one conductor and said motor and that establishes the potential of the energization signal supplied to said motor.

47. (Currently Amended) The medical irrigator of Claim 46, wherein:

said cable has a first conductor over which a first energization signal is available from said at least one battery and a second conductor over which a second energization signal is available from said at least one battery; and

said control assembly is configured so that <u>said</u> switch member can be selectively positioned to: con-

nect neither of said cable conductors to said motor; connect the first said cable conductor to said motor; or connect the second said cable conductor to said motor.

48. (Original) The medical irrigator of Claim 47, wherein said control assembly has a first contact to which said first cable conductor is attached and a second contact to which said second cable conductor is attached and said contacts are statically mounted to said housing.

49. (Currently Amended) The medical irrigator of Claim 46, wherein:

the housing front face is formed with a fluid inlet opening in which said tip assembly suction wand is received;

a suction hose is disposed in said housing and extends from the fluid inlet opening; and

said <u>flexible</u> suction tube is connected to said suction hose.

50. (Original) The medical irrigator of Claim 46, wherein said tip assembly is constructed so that said outlet tube is disposed in said suction wand.

## REMARKS

This paper is submitted in response to the Office Action for the above-identified application mailed 3 December 2010.

Under cover of the Office Action, objections to Claims 33 and 34 were entered.

The claims of this application were also subjected to a double patenting rejection in view of the Applicants' US Pat. No. 7,144,383 and US Pat. No. 4,692,140 to Olson. In regard to the double patenting rejection, it was stated in the Office Action that the Applicants' previously filed Terminal Disclaimer was not accepted.

Also, in the Office Action it was stated that a number of the documents cited in the Information Disclosure Statement filed 6 December 2010 did not appear to be in the Office's file for the applications from which this application claims priority. Accordingly, it was indicated in the Office Action that a number of the cited documents were not considered.

With regard to the documents cited but not submitted in the 6 December 2010 Information Disclosure Statement, the Applicants understand that these documents were previously submitted to the Office during the prosecution of the applications from which this application claims priority. The Applicants therefore continue to assert that per 37 CFR Sec. 1.98(d) to provide duplicate copies of the documents.

However, the undersigned representative will now work with the Examiner to determine if copies of the cited documents are presently in the Office's files. If copies are not available, the Applicants in a new Information Disclosure Statement, will provide additional copies of these documents.

Under cover of this paper amendments are made to Claims 33, 34, 37, 39, 47 and 49.

The amendment to Claim 33 changes the dependency of this claim from Claim 31 to Claim 32. This amendment rectifies the matter giving rise to the objection to this claim.

Claim 34, now recites that the barrel portion of the housing is "shaped to form the housing front end including the housing fluid outlet opening." Claim 31 recites that the housing includes a front end with a fluid outlet opening. Accordingly it is respectfully submitted that Claim 31 provides sufficient antecedent basis for the claim elements recited by Claim 34.

It is therefore submitted that the claim amendments rectify the matters giving rise to the claim objections. These objections should now be withdrawn.

Claims 37, 39 and 49 are amended to enhance the stated relationship of the claim elements.

Claims 47 is amended to correct an informality.

A new Terminal Disclaimer with the necessary fee is filed herewith. It is submitted that this Terminal Disclaimer properly disclaims the term of this patent extending beyond the term of US Pat. No. 7,144,383.

It is therefore submitted that this Terminal Disclaimer should be acceptable. Further, the acceptance of this Terminal Disclaimer serves to overcome the double patenting rejection. Withdrawal of this rejection is now requested.

It is submitted that with these amendments and the submission of the Terminal Disclaimer, the matters giving rise to the outstanding objections and re-

jections have been rectified. The Applicants submit that this application is in condition for allowance.

However, as mentioned above, it is respectfully requested that the Examiner delay review of this application, and the issuance of a Notice of Allowance, until the documents the previously cited for potentially being material have been considered.

Respectfully submitted,

June 2, 2011

/David S. Goldenberg/
David S. Goldenberg
Reg. No. 31,257
CUST. No. 51017
Stryker Corporation
INTEL PROP./RND
4100 EAST MILHAM AVE
KALAMAZOO, MI 49001-6917
V 269.323.7700
F 269.323.2340

Enclosure: Terminal Disclaimer

**[4] ['504 Patent Application Prosecution History (Excerpt)]**

9. Claim 47 is rejected under 35 U.S.C. 112, second paragraph, as being indefinite for failing to particularly point out and distinctly claim the subject matter which applicant regards as the invention.

In regards to claim 47, the claim recites the terms "a first conductor" and a second conductor". Claim 47 depends upon claim 46. Claim 46 recites the term "at least one conductor". It is unclear whether the terms of claims 46 and 47 refer to the same elements or different elements.

***Claim Rejections - 35 USC § 103***

10. The following is a quotation of 35 U.S.C. 103(a) which forms the basis for all obviousness rejections set forth in this Office action:

> (a) A patent may not be obtained though the invention is not identically disclosed or described as set forth in section 102 of this title, if the differences between the subject matter sought to be patented and the prior art are such that the subject matter as a whole would have been obvious at the time the invention was made to a person having ordinary skill in the art to which said subject matter pertains. Patentability shall not be negatived by the manner in which the invention was made.

11. Claims 31-50 are rejected under 35 U.S.C. 103(a) as being unpatentable over Grulke et al (US

5,046,486), and further in view of Drews (US 4,817,599).

In regards to claim 31, Grulke et al teaches a medical irrigator (Figures 1-11) comprising:

a. a housing (housing [11]) shaped to be hand held and having a front end, the front end having a fluid outlet opening (Figure 2)

b. a tip assembly (tip unit [125]) that extends forward from the front end of said housing, said tip assembly having an outlet tube (irrigation tube [153]) in fluid communication with the housing fluid outlet opening and a suction tube (large tube [144])

c. an inlet tube (irrigant liquid supply hose [42]) extending to said housing

d. a pulse pump (pulsed pump [20]) disposed in said housing that opens to the housing front end (Figure 4), said pump configured to receive fluid from said inlet tube and discharging the fluid through the fluid outlet opening

e. a single motor (motor head [204]) disposed in said housing and connected to said pump for actuating said pump

f. a flexible suction tube (suction tube [124]) that is in fluid communication with said tip assembly suction tube and that extends away from said housing

Grulke et al is silent about whether the pump is capable of operating at a variable rate, does not teach that the motor is an electric motor since the motor is a gas pressure-driven motor (Abstract), is silent about whether the motor is operable at variable speeds to control the pumping rate of the pump, is silent about a control assembly disposed in said housing to regulate the speed of said motor, is silent about a battery pack separate from said housing, and is silent about a flexible conductor assembly extending from said battery pack to said housing for supplying energy stored in said battery pack to said motor. Drews teaches a medical irrigator (Figures 1-4) comprising a pump (pump [20]) that is capable of operating at a variable rate, an electric motor (motor [34]), wherein the motor is operable at variable speeds to control the pumping rate of the pump, a control assembly (control switch [36]) disposed in a housing (pump unit [12]) to regulate the speed of said motor, a battery pack (battery power supply [14b]) separate from the housing, and a flexible conductor assembly (electrical control cable [40]) extending from said battery pack to said housing for supplying energy stored in said battery pack to said motor. It would have been obvious to a person having ordinary skill in the art at the time the invention was made to modify the irrigator, of Grulke et al, with the pump operating at a variable rate, the gas pressure-driven motor being substituted with an electric motor, the motor operable at variable speeds, a control assembly to regulate the speed of the motor, a battery pack separate from the housing, and a flexible conductor assembly for supplying energy stored in the battery pack to the motor, as taught by Drews, as allowing the pump to operate at a variable rate or speed by an electric motor operating at variable

speeds will allow the user the ability to vary the amount of fluid pressure applied to the patient at a given time based on the type of procedure being performed, such as the infusion of an intravenous medium or to and fro washing of a cortex and/or nucleus of the eye in extracapsular cataract surgery (Abstract)(column 3, lines 56-66).

In regards to claims 32 and 33, in a modified irrigator of Grulke et al and Drews, Grulke et al does not teach a control assembly. Drews teaches that the control assembly has a switch [36] that is moveably mounted to said housing, said control assembly configured so that:

> a. when said switch is in a first position (starting position when switch is not used), said control assembly does not supply an energization signal to said motor
>
> b. when said switch is in a second position (emulsifying position [36a]), said control assembly supplies a first energization signal from said battery pack to said motor
>
> c. when said switch is in a third position (infusion position [36b]), said control assembly supplies a second energization signal from said battery pack to said motor
>
> d. wherein said switch is configured to move:
>
> > i. from the first position to the second position

ii. from the second position to the third position

It would have been obvious to a person having ordinary skill in the art at the time the invention was made to modify the control assembly, of the modified irrigator of Grulke et al and Drews, with a switch, as taught by Drews, as the speed of the motor and pump is proportional to the amount of pressure applied by the user to the switch to provide for variable speed operation of the motor and pump (column 3, lines 56-62).

In regards to claim 34, in a modified irrigator of Grulke et al and Drews, Grulke et al teaches wherein:

a. said housing is formed to have: a handle (handle [12]); and a barrel (barrel [13]) integral with and located above said handle that extends forward from said handle, said barrel being shaped to form the housing front end including the housing fluid outlet opening (Figure 2)

b. said motor is located in said housing handle (Figures 2 and 4)

In regards to claim 35, in a modified irrigator of Grulke et al and Drews, Grulke et al teaches that said tip assembly suction tube surrounds said tip assembly outlet tube (Figure 9).

In regards to claim 36, in a modified irrigator of Grulke et al and Drews, Grulke et all does not teach a battery pack. Drews teaches that an inlet tube (tube [28]) extends from the battery pack [14b] to the hous-

ing [12] (Figure 1). It would have been obvious to a person having ordinary skill in the art at the time the invention was made to modify the inlet tube, of the modified irrigator of Grulke et al and Drews, to extend from the battery pack to the housing, as taught by Drews, since it has been held that rearranging parts of an invention involves only routine skill in the art. *In re Japikse, 86 USPQ 70.*

In regards to claim 37, in a modified irrigator of Grulke et al and Drews, Grulke et al teaches wherein:

> a. the housing front end is formed with a fluid inlet opening (Figure 2)
>
> b. said tip assembly suction tube is connected to the housing fluid inlet opening (Figure 9)
>
> c. a suction hose (suction hose [100]) is disposed in said housing and extends from the housing fluid inlet opening and to said flexible suction tube so that said suction hose provides a fluid communications path from said tip assembly suction tube to said flexible suction tube (Figure 2)

In regards to claim 38, in a modified irrigator of Grulke et al and Drews, Grulke et al teaches that said housing and said tip assembly are formed with complementary features (insert [127] and body [128]) for releasably holding said tip assembly to the housing front end.

In regards to claim 39, Grulke et al teaches a medical irrigator (Figures 1-11) comprising:

a. a housing [11] shaped to have a front end (Figure 2)

b. a pulse discharge pump [20] disposed in said housing having an inlet and discharge conduit (caps [192][193]), the discharge conduit opening towards the front end of said housing (Figure 4)

c. an inlet line [42] that extends into said housing that is in fluid communication with the pump inlet

d. a single motor [204] disposed in said housing and connected to said pump to actuate said pump

e. a tip assembly [125] that extends from the front end of said housing, said tip assembly having an outlet tube [153] that is in fluid communication with the pump discharge conduit and a suction wand [144]

f. a flexible suction tube [124] that is in fluid communication with said tip assembly suction wand

Grulke et al is silent about whether the pump operates at a variable rate, does not teach that the motor is an electric motor since the motor is a gas pressure-driven motor (Abstract), is silent about whether the motor operates at variable speeds to regulate the pumping rate of the pump, is silent about a battery pack separate and spaced from said housing that contains at least one battery that stores energy for energizing said motor, a flexible cable that extends from

said battery pack to said housing for supplying energy from said battery pack to said motor, and a control assembly integral with said housing to which said cable is connected, said control assembly having a switch member moveably mounted to said housing and said control assembly being configured to apply a variable energization signal from said battery pack to said motor so as to control the speed of said motor and regulate the pumping rate of said pump. Drews teaches a medical irrigator (Figures 1-4) comprising a pump (pump [20]) that operates at a variable rate, an electric motor (motor [34]), wherein the motor operates at variable speeds to regulate the pumping rate of the pump, a battery pack (battery power supply [14b]) separate from the housing, a flexible cable (electrical control cable [40]) extending from said battery pack to said housing for supplying energy stored in said battery pack to said motor, and a control assembly with a switch (control switch [36]) integral with a housing (pump unit [12]) to regulate the speed of said motor. It would have been obvious to a person having ordinary skill in the art at the time the invention was made to modify the irrigator, of Grulke et al, with the pump operating at a variable rate, the gas pressure-driven motor being substituted with an electric motor, the motor operable at variable speeds, a control assembly with a switch to regulate the speed of the motor, a battery pack separate from the housing, and a flexible cable for supplying energy stored in the battery pack to the motor, as taught by Drews, as allowing the pump to operate at a variable rate or speed by an electric motor operating at variable speeds will allow the user the ability to vary the amount of fluid pressure applied to the patient at a given time based on the type of procedure being per-

formed, such as the infusion of an intravenous medium or to and fro washing of a cortex and/or nucleus of the eye in extracapsular cataract surgery (Abstract)(column 3, lines 56-66).

In regards to claims 40 and 41, in a modified irrigator of Grulke et al and Drews, Grulke et al does not teach a flexible cable. Drews teaches wherein:

> a. said cable includes a first conductor (circuit [152]) over which a first energization signal is available from said battery pack and a second conductor (circuit [154]) over which a second energization signal is available from said battery pack
>
> b. said control assembly is configured so that said switch member [36] can be selectively positioned to: connect neither of said cable conductors to said motor; connect the first said cable conductor to said motor; or connect the second said cable conductor to said motor (Figure 4)
>
> c. said control assembly is configured to sequentially move from the position in which neither said cable conductors are connected to said motor to the position in which said first cable conductor is connected to said motor and to the position in which the second said cable conductor is connected to said motor (Figure 4)

It would have been obvious to a person having ordinary skill in the art at the time the invention was made to modify the modified irrigator of Grulke et al

and Drews, with a first conductor and a second conductor of the cable, as taught by Drews, as the speed of the motor and pump is proportional to the amount of pressure applied by the user to the switch to select a first or second conductor to provide for variable speed operation of the motor and pump (column 3, lines 56-62)(column 5, lines 1-17).

In regards to claim 42, in a modified irrigator of Grulke et al and Drews, Grulke et al teaches that said pump is a reciprocating pump (Abstract).

In regards to claim 43, in a modified irrigator of Grulke et al and Drews, Grulke et al does not teach a battery pack. Drews teaches that an inlet tube (tube [28]) extends from the battery pack [14b] to the housing [12] (Figure 1]). It would have been obvious to a person having ordinary skill in the art at the time the invention was made to modify the inlet tube, of the modified irrigator of Grulke et al and Drews, to extend from the battery pack to the housing, as taught by Drews, since it has been held that rearranging parts of an invention involves only routine skill in the art. *In re Japikse, 86 USPQ 70.*

In regards to claim 44, in a modified irrigator of Grulke et al and Drews, teaches that said tip assembly is constructed so that said outlet tube is disposed in said suction wand (Figure 9).

In regards to claim 45, in a modified irrigator of Grulke et al and Drews, Grulke et al teaches wherein:

> a. a suction hose [100] having opposing ends is disposed in said housing (Figure 2)

b. said suction wand is connected to a first end of said suction hose (Figure 9)

c. said flexible suction tube is connected to a second end of said suction hose (Figure 2)

In regards to claim 46, Grulke et al teaches a medical irrigator (Figures 1-11) comprising:

a. a housing [11] having a front face (Figure 2)

b. a tip assembly [125] that extends from the front face of said housing, said tip assembly including an outlet tube [153] and a suction wand [144]

c. a pulse discharge pump [20] disposed in said housing, said pump having an inlet [193] and an outlet [192], the outlet opening into the front face of said housing so as to be in fluid communication with said tip assembly outlet tube

d. a flexible suction tube [124] that is in fluid communication with said tip assembly suction wand, said flexible suction tube extending away from said tip assembly

e. a single motor [204] disposed in said housing connected to said pump for actuating said pump

Grulke et al is silent about whether the pump operates at a variable rate, does not teach that the motor is a variable speed electric motor since the motor is a

gas pressure-driven motor (Abstract), is silent about whether the motor actuates the pump at variable rates, is silent about a battery pack separate from said housing that contains at least one battery, a flexible cable that extends from said battery pack to said housing, said flexible cable having at least one conductor over which an energization signal from said at least one battery is supplied, and a control assembly attached to said housing and connected between said at least one conductor and said motor for supplying a variable potential energization signal to said motor, said control assembly having a single switch member that is moveably attached to said housing that selectively makes/breaks a connection between said at least one conductor and said motor and that establishes the potential of the energization signal supplied to said motor. Drews teaches a medical irrigator (Figures 1-4) comprising a pump (pump [20]) that operates at a variable rate, a variable speed electric motor (motor [34]), wherein the motor actuates the pump at variable rates, a battery pack (battery power supply [14b]) separate from the housing, a flexible cable (electrical control cable [40]) extending from said battery pack to said housing, said flexible cable having at least one conductor (circuits [152][154]) over which an energization signal from said at least one battery is supplied, and a control assembly (control switch [36]) attached to said housing and connected between said at least one conductor and said motor for supplying a variable potential energization signal to said motor, said control assembly having a single switch member [36] that is moveably attached to said housing that selectively makes/breaks a connection between said at least one conductor and said motor and that establishes the potential of the energization signal supplied

to said motor. It would have been obvious to a person having ordinary skill in the art at the time the invention was made to modify the irrigator, of Grulke et al, with the pump operating at a variable rate, the gas pressure-driven motor being substituted with a variable speed electric motor, the motor actuates the pump at variable rates, a control assembly with a switch to regulate the speed of the motor, a battery pack separate from the housing, and a flexible cable with a conductor for supplying energy stored in the battery pack to the motor, as taught by Drews, as allowing the pump to operate at a variable rate or speed by an electric motor operating at variable speeds will allow the user the ability to vary the amount of fluid pressure applied to the patient at a given time based on the type of procedure being performed, such as the infusion of an intravenous medium or to and fro washing of a cortex and/or nucleus of the eye in extracapsular cataract surgery (Abstract)(column 3, lines 56-66).

In regards to claims 47 and 48, in a modified medical irrigator of Grulke et al and Drews, Grulke et al does not teach a cable. Drews teaches wherein:

> a. said cable has a first conductor (circuit [152]) over which a first energization signal is available from said at least one battery and a second conductor (circuit [154]) over which a second energization signal is available from said at least one battery
>
> b. said control assembly is configured so that said switch member [36] can be selectively positioned to: connect nei-

ther of said cable conductors to said motor; connect the first said cable conductor to said motor; or connect the second said cable conductor to said motor (Figure 4)

c. said control assembly has a first contact [36b] to which said first cable conductor is attached and a second contact [36b] to which said second cable conductor is attached and said contacts are statically mounted to said housing (Figure 4)

It would have been obvious to a person having ordinary skill in the art at the time the invention was made to modify the modified irrigator of Grulke et al and Drews, with a first conductor and a second conductor of the cable and a first contact and a second contact, as taught by Drews, as the speed of the motor and pump is proportional to the amount of pressure applied by the user to the switch to select a first or second conductor to provide for variable speed operation of the motor and pump (column 3, lines 56-62)(column 5, lines 1-17).

In regards to claim 49, in a modified irrigator of Grulke et al and Drews, Grulke et al teaches wherein:

a. the housing front end is formed with a fluid inlet opening in which said tip assembly suction wand is received (Figures 2 and 9)

b. a suction hose (suction hose [100]) is disposed in said housing and extends from the fluid inlet opening

c. said flexible suction tube is connected to said suction hose (Figure 2)

In regards to claim 50, in a modified irrigator of Grulke et al and Drews, Grulke et al teaches that said tip assembly is constructed so that said outlet tube is disposed in said suction wand (Figure 9).

**Response to Arguments**

12. The rejection of claims 31-50 on the ground of nonstatutory obviousness-type double patenting as being unpatentable over claims 1, 2, 5, 7, 9, 20, 22-24, 38, 40, and 41 of US 7,144,383, in view of Olson (US 4,692,140), has been withdrawn, based on the acceptance of the terminal disclaimer of June 2, 2011. However, upon further consideration, a new ground(s) of rejection is made in view of Grulke et al and Drews.

* * * * *

PLAINTIFF'S
EXHIBIT
21
zimmer

# Pulsavac® Plus Family

The *Pulsavac*® Plus, *Pulsavac* Plus LP and *Pulsavac* Plus AC wound debridement systems offer versatile solutions to wound irrigation, wound cleaning and therapy. Three models, featuring lightweight design and trigger-controlled pressure settings, offer a powerful cleaning action for bone or a gentle lavage for soft tissue. Concurrent suction and irrigation help to thoroughly remove debris and contaminants without flooding the field. The *Pulsavac* Plus and *Pulsavac* Plus AC are systems for use in orthopaedic and trauma cases. The *Pulsavac* Plus LP provides gentle lavage for soft tissue debridement.

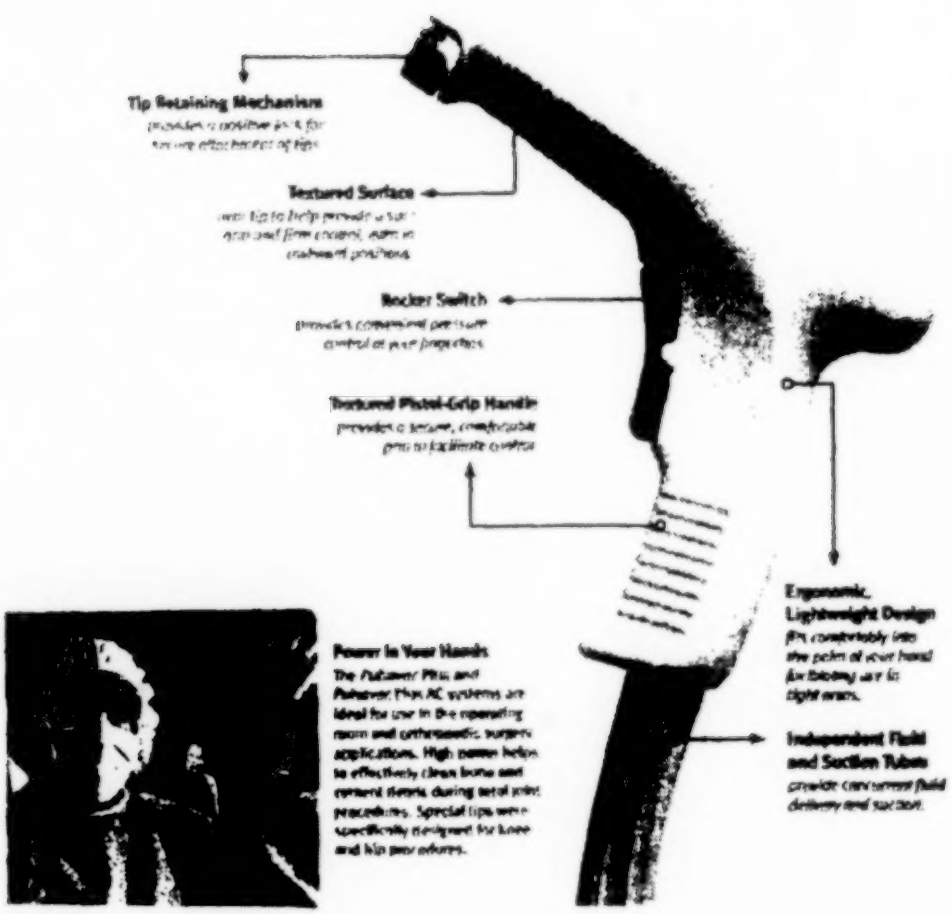
Tip Retaining Mechanism
Textured Surface
Rocker Switch
Textured Pistol-Grip Handle
Ergonomic, Lightweight Design
Independent Fluid and Suction Tubes
Power in Your Hands

Debridement tips include the dust-cover splash shield, designed to minimize aerosolization and help control the dangers associated with transfluorant sprays.

The color coded dots to the left of the tips indicate system compatibility.

Combines convenience and power for smooth, efficient pulsative irrigation and debridement. The external battery pack hangs outside the sterile field, and the variety of tips and trigger-controlled pressure offers either powerful cleaning or gentle lavage. The primary application site is the operating room for orthopaedic surgery. Pulsavac Plus operates on eight AA batteries.

Storable AC Adapter
Eliminates the need for alkaline batteries, reducing the amount of waste.

**Pulsavac Plus AC ▪**
An environmentally-friendly option. The reusable AC Adapter Power Pack must be purchased separately. This system completely eliminates the need for alkaline batteries.

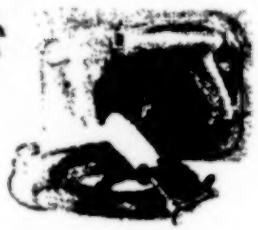

**Pulsavac Plus LP ▪**
This low pressure system delivers an adjustable, gentle lavage for wound cleaning and therapies and is an excellent alternative to traditional whirlpool therapy treatments. Primary application may occur in the OR, ER, wound care clinics, nursing homes or long-term care facilities. Therapy can be done in the patient's room or at the patient's home.

Low Pressure Debridement Tip Only

▪

## Ordering Information

| Prod. No. | Description |
|---|---|
| 00-5150-420-00 | Pulsavac Plus Component Kit |
| 00-5150-475-00 | Pulsavac Plus Fan Kit |
| 00-5150-482-00 | Pulsavac Plus Hip Kit |
| 00-5150-495-00 | Pulsavac Plus Shower Kit |

| Prod. No. | Description |
|---|---|
| 00-5150-420-01 | Pulsavac Plus Component Kit |
| 00-5150-475-01 | Pulsavac Plus Fan Kit |
| 00-5150-482-01 | Pulsavac Plus Hip Kit |
| 00-5150-495-01 | Pulsavac Plus Shower Kit |

| Prod. No. | Description |
|---|---|
| 00-5150-958-00 | Pulsavac Plus AC Power Supply (US) |
| 00-5150-426-01 | Pulsavac Plus AC Component Kit |
| 00-5150-476-01 | Pulsavac Plus AC Fan Spray Kit |
| 00-5150-486-01 | Pulsavac Plus AC Hip Kit |
| 00-5150-496-01 | Pulsavac Plus AC Shower Spray Kit |

| Prod. No. | Description |
|---|---|
| 00-5150-920-00 | Pulsavac Plus LP Component Kit |
| 00-5150-975-00 | Pulsavac Plus LP Fan Spray Kit |
| 00-5150-995-00 | Pulsavac Plus LP Shower Spray Kit |

| Prod. No | Description |
|---|---|
| 00-5150-175-00 | High Capacity Fan Spray w/Splash Shield, 12.7cm length |
| 00-5150-176-00 | High Capacity Fan Spray w/Filter |
| 00-5150-195-00 | High Capacity Shower Spray w/Splash Shield, 12.7cm length |
| 00-5150-375-00 | High Capacity Fan Spray w/out Splash Shield, 10cm length |
| 00-5150-795-00 | High Capacity Shower Spray w/out Splash Shield, 10cm length |

| Prod. No. | Description |
|---|---|
| 00-5150-155-00 | High Capacity Single Stream Tip w/Splash Shield, 12.7cm length |
| 00-5150-065-00 | Large Fluid Orifice Tip w/Wide Single Stream, 7.3cm length |

| Prod. No. | Description |
|---|---|
| 00-5150-181-00 | High Capacity Bit Tip Four Orifices, 20.32cm x 1.27cm |
| 00-5150-182-00 | High Capacity Bit Tip w/Radial Spray, 22.86cm x .89cm |
| 00-5150-183-00 | High Capacity Bit Brush Tip w/Radial Spray, 22.86cm x .89cm x 1.52cm |
| 00-5150-184-00 | High Capacity Bit Hip Irrigation Tip, 7.5cm length |
| 00-5150-185-00 | High Capacity Bit Tip Four Orifices, 10.48cm x 1.27cm |
| 00-5150-187-00 | High Capacity Tibial Plateau Brush Tip, 7cm length |

| Prod. No. | Description |
|---|---|
| 00-5150-145-00 | High Capacity Adjustable Length Tip w/Splash Shield |
| 00-5150-186-00 | Flexible Tip, 18.5 inch length |

| Prod. No. | Description |
|---|---|
| 00-5150-188-00 | 18cm Splash Shield |
| 00-5150-189-00 | 23cm Splash Shield |

zimmer

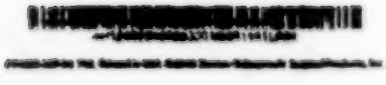

UNITED STATES DISTRICT COURT
WESTERN DISTRICT OF MICHIGAN SOUTHERN DIVISION

| | |
|---|---|
| STRYKER CORPORATION, STRYKER PUERTO RICO, LTD. and STRYKER SALES CORPORATION<br><br>Plaintiffs and Counter-Defendants,<br><br>v.<br><br>ZIMMER INC. and ZIMMER SURGICAL, INC.,<br><br>Defendants and Counter-Plaintiffs. | )<br>)<br>)<br>)<br>)<br>)<br>)Case No. 1:10-cv-1223<br>)<br>)Hon. Robert J. Jonker<br>)<br>)<br>)<br>)<br>)<br>)<br>) |

**JOINT CLAIM CONSTRUCTION STATEMENT FOR DISPUTED CLAIM TERMS**

Pursuant to the Court's Case Management Order, Plaintiffs, Stryker Corporation, Stryker Puerto Rico, Ltd., and Stryker Sales Corporation (collectively "Stryker"), and Defendants, Zimmer Inc. and Zimmer Surgical, Inc. ("Zimmer"), propose the following constructions for the disputed claim terms:

| Claim Terms | Stryker's Proposed Claim Construction | Zimmer's Proposed Claim Construction |
|---|---|---|
| Handle | A portion of a device designed to be held by a hand or hands | Plain and ordinary meaning; no construction necessary |
| Adjacent | Close to or lying near | Plain and ordinary meaning; no construction necessary |
| Trigger | A lever pulled by a finger or fingers to activate a device or mechanism | Resilient lever designed to be pulled in a single direction |
| Lock Assembly | Components that work together to secure or fasten the tip to the hand piece | Subject to 35 U.S.C. §112 ¶6.<br><br>Function: releasably securing the discharge tube and the suction tube to said body.<br><br>Structure: a tip lock, a spring plate, a biasing bar, and a flange on a tip assembly. |
| Motor Operable at Varia- | A motor that can operate at more than | Motor with continuously variable speed |

| Claim Terms | Stryker's Proposed Claim Construction | Zimmer's Proposed Claim Construction |
|---|---|---|
| ble Speeds | one speed | |
| Variable Speed Electric Motor | An electric motor that can operate at more than one speed | Electric motor with continuously variable speed |
| Motor Operating at Variable Speeds | A motor that can operate at more than one speed | Motor with continuously varying speed |
| Control Assembly | Components that work together to energize the motor | Subject to 35 U.S.C. §112 ¶6.<br><br>Function:<br><br>• Claim 1: regulate the speed of said motor<br><br>• Claim 20: control the speed of said motor and regulate the pumping rate of said pump<br><br>• Claim 38: supplying a variable po- |

| Claim Terms | Stryker's Proposed Claim Construction | Zimmer's Proposed Claim Construction |
|---|---|---|
| | | tential energization signal to said motor<br><br>Structure: an L-shaped trigger member with an elongate trigger lever, a single switch contact support arm, a single conductive contact blade, two posts integral with the housing that are configured for electrical contacts to be mounted on them, two electrically-conductive, spring-like metal contacts mounted to said posts, and two electrically conductive contacts protruding rearwardly from the motor, one being a springy rectangular piece that is bent intermediate its ends in a dogleg |

| Claim Terms | Stryker's Proposed Claim Construction | Zimmer's Proposed Claim Construction |
|---|---|---|
| | | fashion |
| Switch Assembly | Components that work together to make, break or change an electric circuit | Subject to 35 U.S.C. §112 ¶6.<br><br>Function: selectively establishing a connection between at least one of said conductors and said motor<br><br>Structure: a single conductive contact blade, two posts integral with the housing that are configured for electrical contacts to be mounted on them, two electrically-conductive, spring-like metal contacts mounted to said posts, and two electrically conductive contacts protruding rearwardly from the motor, one being a springy rectangular piece that is bent |

| Claim Terms | Stryker's Proposed Claim Construction | Zimmer's Proposed Claim Construction |
|---|---|---|
| | | intermediate its ends in a dogleg fashion |
| Switch Member | A part for directing an electric current | Electrically conductive contact blade |

Dated: October 21, 2011

Respectfully submitted,

/s/ David J. Gass
David J. Gass (34582)
**MILLER JOHNSON**
Calder Plaza Building
250 Monroe Avenue NW
Suite 800
Grand Rapids, Michigan
49503-2250
(616) 831-1717

Gregory J. Vogler
Sharon A. Hwang
Deborah A. Laughton
McANDREWS, HELD & MALLOY, LTD.
500 West Madison Street,
Suite 3400
Chicago, Illinois 60661
(312) 775-8000

*Attorneys for Plaintiffs,* Stryker Corporation,

/s/ Adam R. Brausa
Kevin Abraham Rynbrandt (P46699)
**RYNBRANDT & ASSOCIATES**
1000 Front Street, N.W.
Grand Rapids, Michigan
49546
(616) 915-9266

Bryan S. Hales, P.C.
Eric D. Hayes
Adam R. Brausa
KIRKLAND & ELLIS LLP
300 North LaSalle Street
Chicago, Illinois 60654
(312) 862-2000

*Attorneys for Defendants,*

Stryker Puerto Rico, Ltd., and Stryker Sales Corporation

Zimmer, Inc. and Zimmer Surgical, Inc.

## Zimmer's Responses to Stryker's Infringement Contentions Regarding the '807 Patent

### '807 Patent - Claim 45

45. An irrigating handpiece for receiving a tip assembly having a discharge tube and a suction tube, said irrigating handpiece including:

a body at least partially shaped to form a handgrip and a front end for receiving the discharge tube and the suction tube;

a lock assembly mounted to the front end of said body for releasably securing the discharge tube and the suction tube to said body;

a discharge head disposed in said body, said discharge head having an open end adjacent the front end of the body for receiving the discharge tube wherein, said discharge head receives irrigation fluid and discharges the irrigation fluid through the open end into the discharge tube; and

a single piece drain tube, said drain tube having a first end mounted in said body and a second end integral with the first end that extends outside of and away from said body, the first end of said drain tube being adjacent the front end of said body and being in fluid communication with the suction tube.

**Stryker's Infringement Contentions**

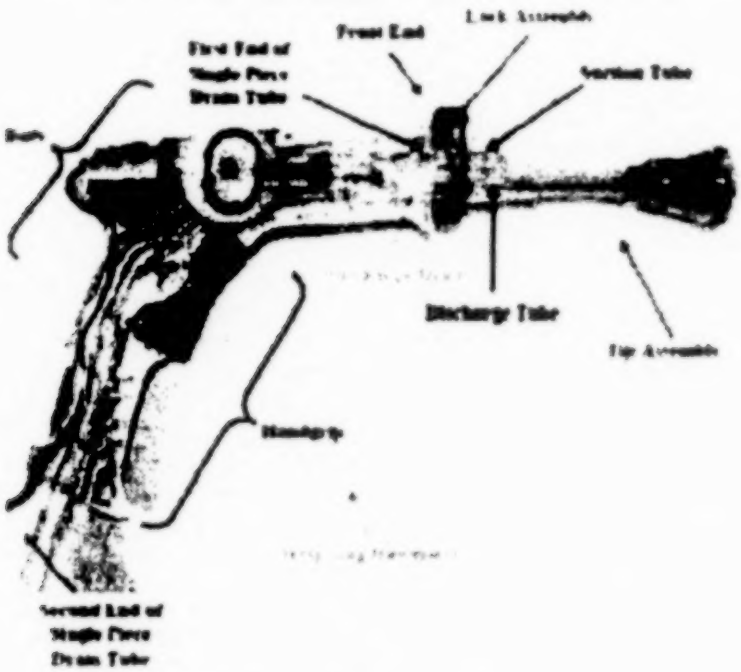

**Zimmer's Response**

Stryker's Initial Infringement Contentions do not specifically identify where each element of the asserted claim of the '807 patent is found within each Accused Instrumentality as required by LPR 2.2 (c) (N.D. Ill.). For example, it is unclear from Stryker's charts what element Stryker asserts is the single piece drain tube in the Zimmer product. Additionally, while Stryker accused Zimmer's Pulsavac Plus, Pulsavac Plus LP, and Pulsavac Plus AC ("the Accused Products") products of infringement, it appears that Stryker only provided charts relating to Zimmer's Pulsavac Plus product. Accordingly, Zimmer's responses below are based on Zimmer's current understanding of Stryker's infringement contentions. Additionally, Stryker does not allege any claim element in the '807 patent as present by equivalents. Therefore, Zimmer's non- infringement contentions are made with respect to literal infringement only. The parties

are in the early stages of discovery and Zimmer's investigation and analysis is ongoing. Zimmer reserves the right to supplement these responses.

Subject to the statements above, Zimmer states that the Accused Products do not embody each and every limitation of claim 45 of the '807 patent for at least the following reasons:

*First*, the Accused Products do not include a "single piece drain tube." The drain tube in the Accused Products is made of more than one piece.

*Second*, the Accused Products do not include a "lock assembly." The term "lock assembly," standing alone, does not connote sufficient structure to particularly point out and distinctly claim applicants' claimed invention. Accordingly, "lock assembly" should be construed as a means-plus-function claim limitation. The claimed function is "releasably securing the discharge tube and the suction tube to said body." Based on the specification of the '807 patent, the disclosed structure for performing this function is comprised of at least a plastic tip lock piece with a flat face plate, a spring plate that extends rearwardly from the face plate, a biasing bar in the handpiece that biases the spring plate, and a flange on the tip assembly that fits that interacts with the inner surface of the face plate.

(*See generally* '807 patent at 7:63-8:32, 10:17-28). The Accused Products do not have this structure or an equivalent, because the structure identified by Stryker on the Accused Products is manually operated by the user and therefore does not require any spring/biasing functionality.

*Third*, even if one assumed that the identified structure in the Accused Products is equivalent to the described disclosed structure, the Accused Products still do not contain a lock "assembly." The structure identified by Stryker on the Accused Products is a single piece, not an assembly of pieces.

UNITED STATES DISTRICT COURT
WESTERN DISTRICT OF MICHIGAN
SOUTHERN DIVISION

STRYKER CORPORATION, STRYKER PUERTO RICO, LTD., and STRYKER SALES CORPORATION,

Plaintiffs and Counter-Defendants,

v.

ZIMMER INC., and ZIMMER SURGICAL, INC.,

Defendants and Counter-Plaintiffs.

CASE NO. 1:10-cv-1223

HON. ROBERT J. JONKER

---

**ORDER REGARDING STRYKER'S MOTION FOR PARTIAL SUMMARY JUDGMENT OF INFRINGEMENT**

---

[4]

Zimmer's final argument on Claim 2 of the 329 patent does identify a genuine factual issue for trial. Zimmer contends that the motor in its Pulsavac Plus device is not in the handle of the unit as required by Claim 2. (Ex. D, doc. # 158-4, at 2.) At claim construction, the Court defined "handle" to mean "a portion of a device that is designed to be held by a hand or

hands." (Order, doc. # 106, at 8-9.) The motor in the Pulsavac Plus is located in a nub, in roughly the same location as the hammer in a standard pistol. (*See* Ex. D, doc. # 158-4, at 2.) Whether this portion of the product was "designed to be held" is a question of fact on which reasonable jurors could disagree. Zimmer has produced evidence that would allow the jury to decide in its favor on this issue. The designed grips on the Pulsavac Plus, for example, do not extend to the nub that houses the motor, from which it may be inferred that the nub was not designed to be held. Zimmer has design witnesses that will testify in support of that inference. (*See* Def.'s Opp., doc. # 225, at 6.) As further support of its position, Zimmer can point to statements Stryker made in an effort to distinguish its own products from the prior art of the Mattchen patent. (*See id.* at 4-5.) On the other hand, there is also strong evidence that Stryker has presented to support a jury's conclusion that the nub area really does meet the "designed to be held" claim limitation. One of the Pulsavac Plus' lead designers is on record as demonstrating ways to hold the Pulsavac Plus so that the user's hand grips the nub on the device. (*See, e.g.*, Ex. S, doc. # 164, at 5 ("I mean, you can technically say [the nub's] a handle. You might be able to palm it.").) Furthermore, Zimmer's patent application for the Pulsavac Plus says that the "barrel *grip* encloses a motor and pump assembly," suggesting that the motor is part of the grip or, in other words, part of the handle. (*See* Ex. O, doc. # 160-5.) Accordingly, the Court cannot grant summary judgment on this aspect of Stryker's Motion under Claim 2 of the 329 patent.

* * * * *

UNITED STATES DISTRICT COURT
WESTERN DISTRICT OF MICHIGAN
SOUTHERN DIVISION

STRYKER CORPORATION, STRYKER PUERTO RICO, LTD., and STRYKER SALES CORPORATION,

Plaintiffs and Counter-Defendants,

v.

ZIMMER INC., and ZIMMER SURGICAL, INC.,

Defendants and Counter-Plaintiffs.

CASE NO. 1:10-cv-1223

HON. ROBERT J. JONKER

**ORDER DENYING ZIMMER'S MOTION FOR SUMMARY JUDGMENT OF INVALIDITY OF CLAIMS 45 AND 50-52 OF U.S. PATENT NO. 6,179,807 UNDER 35 U.S.C. § 102(B)**

---

[3]

## II. ANALYSIS

Zimmer moves for summary judgment that claims 45, 50, 51, and 52 of Stryker's 807 patent are invalid as anticipated by the Var-A-Pulse. A patent claim is invalid as anticipated by prior art if each limitation in the patent is found in a single prior art reference. 35 U.S.C. § 102; *Apple Computer, Inc. v. Articulate Sys.*,

*Inc.*, 234 F.3d 14, 20 (Fed. Cir. 2000). Consistent with this rule, a patent is invalid if it describes a device that was in public use or on sale in the United States more than a year before the date on which the patentee applied for the patent. 35 U.S.C. § 102(b). Summary judgment of invalidity is proper only "if no reasonable jury could find that the patent is not anticipated." *Telemac Cellular Corp. v. Topp Telecom, Inc.*, 247 F.3d 1316, 1327 (Fed. Cir. 2001).

Stryker does not dispute that the Var-A-Pulse is prior art that was on sale in the United States more than a year before the 807 patent's priority date. Rather, it argues that the Var-A-Pulse did not include a "lock assembly," which is one of the limitations in claims 45, 50, 51, and 52 of the 807 patent. (Pl.'s Opp'n, doc. # 215.) The sole question presented by Zimmer's Motion, then, is whether a reasonable jury could find that the Var-A-Pulse did not include a "lock assembly," as the Court defined that term at claim construction. The Court concludes that the answer is yes.

Zimmer designed the Var-A-Pulse with a friction fit between the handpiece and tip. Zimmer can plausibly argue to a jury that a friction fit qualifies as "components that work together to secure or fasten the tip to the handpiece," but the record does not compel the jury to accept the argument. A reasonable jury could find, for example, that a fit based on friction does not involve a structure or assembly at all; or does not involve multiple components working together for that purpose; or even that the friction fit is not really about securing or fastening the tip to the handpiece. The record, for example, includes evidence that the Var-A-Pulse's "friction fit" mechanism often failed

to keep the device's tip in place during use, suggesting that some separate lock assembly was ultimately needed to accomplish that purpose. (Ex. D, doc. # 221-3, at 3.) Zimmer's own expert admits that the friction fit mechanism does not include any sort of structure, something normally required for an "assembly." (*See* Order, doc. # 106, at 13-14 ("A person of ordinary skill in the art would understand this claim term as describing a *structure* . . .").) And Stryker's technical expert insists that no one of ordinary skill in the art would consider the Var-A-Pulse devices to have a lock assembly. (*See, e.g.*, Ex. Q, doc. # 220-2, at 4-5.) Most importantly, the United States Patent Office knew of the Var-A-Pulse when it issued the 807 patent. (*See* Ex. E., doc. # 217-5, at 1.) The Patent Office's determination that the 807 patent did not infringe on the Var-A-Pulse is strong evidence that a reasonable juror could find for Stryker on this issue. *See Glaxo Group Ltd. v. Apotex, Inc.*, 376 F.3d 1339, 1348 (Fed. Cir. 2004) ("This burden [of showing invalidity by clear and convincing evidence] is especially difficult when, as is the present case, the infringer attempts to rely on prior art that was before the patent examiner during prosecution."). Such evidence precludes summary judgment here.

Zimmer objects that (1) that Stryker's expert has admitted that grooves in a handpiece can constitute components in a "lock assembly," and (2) that the instructions for the Var-A-Pulse explicitly directed users to "secure" the tip to the handpiece by means of the "friction fit" mechanism. (Def.'s Br. in Supp. of Mot., doc. # 171, at 12.) That evidence certainly bolsters Zimmer's position and will be of use to Zimmer at trial. But to prevail on a motion for summary judgment, Zimmer must do more than simply support

its position; it must demonstrate that the facts allow for no reasonable conclusion except the one it urges. The record does not rise to that level on this issue.

* * * * *

UNITED STATES DISTRICT COURT
WESTERN DISTRICT OF MICHIGAN
SOUTHERN DIVISION

STRYKER CORPORATION, STRYKER PUERTO RICO, LTD., and STRYKER SALES CORPORATION,

Plaintiffs,

v.

ZIMMER INC., and ZIMMER SURGICAL, INC.,

Defendants.

CASE NO. 1:10-cv-1223

HON. ROBERT J. JONKER

**JOINT PROPOSED JURY INSTRUCTIONS**

**[65] DISPUTED PROPOSED FINAL JURY INSTRUCTION NO. 26**

**Willful Infringement**

In this case, Stryker argues both that Zimmer infringed and, further, that Zimmer infringed willfully. **The Court has already decided that Zimmer infringed claims 45, 50, 51 and 52 of the '807 patent, and claims 1, 2, 3, 8, 10, 11, 13, 17, 19, 20, 22, 24, 27, 38, 40 and 46 of the '383 patent. You must determine whether or not Zimmer's infringement of the '807 and '383 patents was willful. Additionally, if you have decided that Zimmer infringed claim 2 of the '329 patent, you must go on to determine whether or not Zimmer's in-**

fringement of the '329 patent was willful. [Stryker added; Zimmer objects] Willfulness requires you to determine by clear and convincing evidence that Zimmer acted recklessly. To prove that Zimmer acted recklessly, Stryker must prove two things by clear and convincing evidence: The first part of the test is objective: the patent holder must persuade you that Zimmer acted despite a high likelihood that Zimmer's actions infringed a valid patent. In making this determination, you may not consider Zimmer's state of mind. Legitimate or credible defenses to infringement, even if not ultimately successful, demonstrate a lack of recklessness. **Alternatively, if the defenses to infringement were not legitimate or credible then this first objective part of the test for willfulness has been met. [Stryker added and will send basis; Zimmer objects].** Only if you conclude that Zimmer's conduct was reckless do you need to consider the second part of the test. The second part of the test does depend on the state of mind of the Zimmer. The patent holder must persuade you that Zimmer actually knew or should have known that its actions constituted an unjustifiably high risk of infringement of a valid patent. To determine whether Zimmer had this state of mind, consider all facts which may include, but are not limited, to:

(1) Whether or not Zimmer acted in accordance with the standards of commerce for its industry;

(2) Whether or not Zimmer intentionally copied a product of Stryker's that is covered by the '329, '807, or '383 patents;

(3) Whether or not there is a reasonable basis to believe that Zimmer did not infringe or had a reasonable defense to infringement;

(4) Whether or not Zimmer made a good-faith effort to avoid infringing the '329, '807, and '383 patents, for example, whether Zimmer attempted to design around the '329, '807, and '383 patents; and

(5) Whether or not Zimmer tried to cover up its infringement.

**(6) Whether Zimmer presented evidence that it obtained opinions of counsel to justify its infringing actions [Stryker added; Zimmer objects]**

Authority: *Federal Circuit Bar Association Model Patent Jury Instructions* B.3.8 (February 2012); *see also* 3A FED. JURY PRAC.& INSTR. § 158:94

35 U.S.C. § 284; *In re Seagate Tech., LLC*, 497 F.3d 1360 (Fed. Cir. 2007) (standard for finding willfulness); *Knorr-Bremse v. Dana Corp.*, 383 F.3d 1337 (Fed. Cir. 2004) (en banc) (opinion of counsel defense); *Crystal Semiconductor Corp. v. Tritech Microelectronics Int'l, Inc.*, 246 F.3d 1336, 1346 (Fed. Cir. 2001) (burden of proof for willfulness); *WMS Gaming Inc. v. Int'l Game Tech.*, 184 F.3d 1339, 1354 (Fed. Cir. 1999) (knowledge of the patent necessary to show willfulness); *Read Corp. v. Portec, Inc.*, 970 F.2d 816 (Fed. Cir. 1992) (identifying factors that may show willfulness); *Gustafson, Inc. v. Intersystems Indus. Prods., Inc.*, 897 F.2d 508, 510 (Fed. Cir. 1990) (history of Federal Circuit decisions on willfulness).

Stryker added the sentences stating "*The Court has already decided that Zimmer infringed claims 45, 50, 51 and 52 of the '807 patent, and claims 1, 2, 3, 8, 10, 11, 13, 17, 19, 20, 22, 24, 27, 38, 40 and 46 of the '383 patent. You must determine whether or not Zimmer's infringement of the '807 and '383 patents was willful. Additionally, if you have decided that Zimmer infringed claim 2 of the '329 patent, you must go on to determine whether or not Zimmer's infringement of the '329 patent was willful,*" in order to properly inform the jury that they must consider the issue of willfulness at least with respect to the asserted claims of the '807 and '383 patents given the Court's prior holding of infringement.

Stryker added the sentence stating "*Alternatively, if the defenses to infringement were not legitimate or credible then this first objective part of the test for willfulness has been met,*" pursuant to Federal Circuit law to balance the instruction that discusses "legitimate and credible" defenses. *See, e.g., Bard Peripheral Vascular, Inc. v. W.L. Gore & Associates, Inc.*, 682 F.3d 1003, 1005-1006 (Fed. Cir. 2012).

Stryker added the sentence stating "*(6) Whether Zimmer presented evidence that it obtained opinions of counsel to justify its infringing actions*" pursuant to Federal Circuit case law that holds that evidence relating to opinions of counsel – including the absence of such opinions – is relevant to willfulness and is properly presented to the jury for consideration. *See, e.g., Broadcom Corp. v. Qualcomm, Inc.*, 543 F.3d 683, 698 (Fed. Cir. 2008) (jury instruction stating that the jury may consider whether defendant sought a legal opinion as one factor in assessing whether, under the totality of the circumstances, any infringement

was willful "comports with our holding in *Knorr-Bremse*"); *Spectralytics, Inc. v. Cordis Corp.*, 2011 U.S. App. LEXIS 11981, at *27-28 (Fed. Cir. June 13, 2011) ("Precedent has also clarified that the failure to obtain an opinion of counsel or otherwise investigate the patent situation can be considered, in the totality of the circumstances."); *see also Retractable Techs. Inc. v. Becton, Dickinson and Co.*, 2009 WL 8725107, at *4 (E.D. Tex. Oct. 8, 2009) (Failure to produce an opinion of counsel at trial can be considered by the finder of fact as part of the "totality of circumstances" regarding willfulness. Thus, Plaintiffs should be permitted to introduce evidence or argument of this failure to produce an opinion of counsel at trial, although Plaintiffs cannot submit that any adverse inference should be drawn as to what the content of an opinion of counsel would have been.") (citing *Broadcom*); *DR Systems, Inc. v. Eastman Kodak Co.*, 2009 WL 3756765, at *11 (S.D. Cal. Nov. 9, 2009) ("While the accused infringer no longer has an affirmative obligation to obtain opinion of counsel, this fact may be considered in the totality of circumstances to assess whether any infringement was willful.") (citing *Broadcom*, 543 F.3d at 699); *Creative Internet Advertising Corp. v. Yahoo! Inc.*, 2009 WL 2382132, at **2, 5 (E.D. Tex. July 30, 2009) ("Defendant argues that its decision to not obtain an opinion of counsel regarding infringement is not determinative of this issue . . . . While this is correct, the lack of opinion of counsel is one factor of many that the jury could have taken into account in determining whether Defendant willfully infringed.) (citing *Seagate* and *Broadcom*); *In re Katz Interactive Call Processing Patent Litigation*, 2009 WL 3698470, at *3 (C.D. Cal. March 11, 2009) ("It is important to note that despite the lack of

adverse inference, the Federal Circuit still allows a jury to consider the absence of an opinion.") (citing *Broadcom*); *Energy Transportation Group, Inc. v. William Demant Holding*, 2008 WL 114861, at *1 (D. Del. 2008). *See also* Stryker's Opposition to Zimmer's Motion *in Limine* to Preclude Stryker from Referencing or Presenting Argument Relating to Zimmer's Decision not to Obtain an Opinion of Counsel or not to Waive Privilege and Disclose Opinions of Counsel.

**ZIMMER OBJECTION:**

Zimmer objects to Stryker's proposed language relating to the Court's prior finding of partial infringement on summary judgment as unnecessary in this instruction and highly prejudicial. If any reference to prior proceedings is deemed appropriate, it should be consistent with the Summary of Contention instructions as this issue is present there as well.

Zimmer also objects to Stryker's addition: "Alternatively, if the defenses to infringement were not legitimate or credible then this first objective part of the test for willfulness has been met." This is not in the model instructions, not legally sound, and highly prejudicial. *See, e.g., Bard Peripheral Vascular, Inc. v. W.L. Gore & Assocs., Inc.*, 682 F.3d 1003 (Fed. Cir. 2012).

Zimmer objects to Stryker's addition: "(6) Whether Zimmer obtained opinions of counsel to justify its infringing actions." Zimmer is not relying on an advice of counsel defense to Stryker's willful infringement allegations. There is no legal obligation for Zimmer to obtain or waive privilege and produce opinions of counsel and, in the absence reliance on an opinion of

counsel, any reference to an alleged infringer's failure to obtain or waive privilege and produce opinions of counsel in the context of proving willful infringement is strictly prohibited under Federal Circuit law and highly prejudicial. *In re Seagate Tech., LLC*, 497 F.3d 1360 (Fed. Cir. 2007); *Knorr-Bremse v. Dana Corp.*, 383 F.3d 1337 (Fed. Cir. 2004) (en banc). Indeed, Federal Circuit Bar Association Model Instruction B.3.8 includes a factor for opinions of counsel for willful infringement specifically noting: "[***Give this instruction only if [alleged infringer] relies upon an opinion of counsel as a defense to an allegation of willful infringement***:" Here, Zimmer is raising no such defense.

UNITED STATES DISTRICT COURT
WESTERN DISTRICT OF MICHIGAN
SOUTHERN DIVISION

STRYKER CORPORATION, STRYKER PUERTO RICO, LTD., and STRYKER SALES CORPORATION,

Plaintiffs,

v.

ZIMMER INC., and ZIMMER SURGICAL, INC.,

Defendants.

CASE NO. 1:10-cv-1223

---

**TRANSCRIPT OF JURY TRIAL**
**BEFORE THE HONORABLE**
**ROBERT J. JONKER**
**UNITED STATES DISTRICT JUDGE**
**GRAND RAPIDS, MICHIGAN**

---

January 15-February 5, 2013

[23] THE COURT

Now, the product involved, the parties refer to it as -- I want to make sure I read this because -- it's called a pulsed lavage irrigation system. Now, I didn't really know what that meant. I've had the privilege of seeing some of the products -- and you will too, of course -- and the way I think of it as a layperson not at all familiar with the underlying design work is as a motorized squirt gun for surgeons. Okay? Now, that's not what the parties call it, and I don't want you to put too much on that, but I just want you to have a mental image of what we're talking about.

And you'll hear more about it, but, in essence, these are products that medical personnel can use in surgery or otherwise to apply water under pressure to a wound, or maybe to a bone that's getting prepared for a graft, or some kind of transplant or replacement, use it to clean that area and then suck out the water and debris that's a part of it, and to do it in a light-weight device that's held in the hand and that's disposable; that's used once and thrown away. Okay? That's the basic technology that we're talking about, and that's what the parties' claims are going to be about and the defenses. And that's probably all you need to know at this stage of the case.

* * * * *

[375] DIRECT EXAMINATION OF DAVID GRULKE

Q. Let's break that down just to the insides. What were the challenges you had in designing the electric motor and the gear train system to generate the pulsating flow?

*A*. The electric motor had a rotary motion that needed to be converted to a reciprocating motion in order to get the pulsating effect of the fluid.

*Q*. And why was that a challenge?

*A*. The power that the high-pressure tank gave us needed to be actually repeated with a very small motor and gear train assembly to transfer that motion to reciprocating and still allow the power of the unit to get a powerful enough pulse to clean bone.

*Q*. In the pulse lavage area had you ever seen anything like the electric motor and gear system that was developed at Stryker?

*A*. No, basically this is an all-encompassed unit that was never done before and pretty much revolutionized the industry at that time.

*Q*. So tell the jury, how do you feel about your work and the inventions for the SurgiLav Plus project?

*A*. I feel good. I think we accomplished what we needed to. We got great results from our customers, the healthcare workers. They said they loved it. It worked great. It was easy to use. It was something that they wanted.

*Q*. Okay. And before Stryker began developing the SurgiLav Plus project, were there any battery-operated pulse lavage systems in the marketplace?

*A*. No, not that I'm aware of.

* * * * *

"Stryker was the first company to capitalize on this with their disposable battery system, the SurgiLav Plus."

Do you agree with what?

*A.* Yes, sir.

*Q.* And the next sentence, "This product was able to take operating room business away from us over the past three years."

Do you see that?

*A.* Yes.

*Q.* That's referring to the Stryker SurgiLav Plus taking business away from Zimmer?

*A.* I believe it probably did, yes.

*Q.* Did it or was it probably?

*A.* It did.

*Q.* Could you highlight the sentence that says, "These battery-powered systems, with their quick setup and lack of capital equipment requirements, have made a major impact on the market."

Do you see that?

*A.* Yes, sir.

*Q*. That's talking about the pulsed lavage market, right?

*A*. Yes.

*Q*. Didn't those products revolutionize the market?

*A*. They were different. They were the first ones on the market like that.

*Q*. Didn't they change the entire market that got rid of the electric boxes, got rid of the pressure tanks, made those all old-school, obsolete, and if you didn't have a battery-operated product, you weren't going to be a player? Isn't that a fact?

*A*. I don't know if I can answer that for sure, sir. We continued to sell the Pulsavac machines and their products for quite a long time.

It certainly was different, and it certainly was more convenient for the surgeon.

*Q*. Are you selling any of the Pulsavac I, II, or III products?

*A*. No, sir.

*Q*. Okay. So you don't agree that the battery-operated systems that Stryker started revolutionized the market for pulsed lavage?

*A*. Perhaps it did. I don't -- revolutionize is a strong word, sir.

*Q*. Okay. Pioneered the market?

*A.* Pioneered, yes.

* * * * *

**[476] DIRECT EXAMINATION OF WILLIAM DONIZETTI**

*Q.* Okay. Now, we talked about H.M. Design, who they are, and their important part in developing the Pulsavac Plus. Did Zimmer demonstrate the Stryker SurgiLav Plus or InterPulse product to H.M. Design?

*A.* I believe we did, yes.

*Q.* Did Zimmer show H.M. Design the Stryker battery products because H.M. Design did not know anything about what they were designing or the market they were designing for?

*A.* I think we showed it to them to understand what we needed it to be to make our product better.

*Q.* I want to make sure you understood my question. Did Zimmer show H.M. Design the Stryker battery-operated products because, first, H.M. Design did not know anything about what they were designing?

*A.* Prior to -- prior to coming -- to us going to them, they had not been involved in pulsatile lavage.

*Q.* That wasn't my question. The question was did you show them the Stryker products because H.M Design did not know anything about what they were designing?

*A.* I don't believe that's why we showed it to them. We showed it to them because that was part of the development project.

Q. Okay. We'll get to that.

Did Zimmer show H.M. Design the Stryker battery-operated products because H.M. Design did not know anything about the market they were designing for?

A. That's true, they did not know the market. That's correct.

Q. Okay. So let's go back to the first one. Could you please bring up on the screen your deposition transcript testimony at 229, lines 8 to 16.

*(Playing a portion of witness's video deposition)*

Q. *(MR. VOGLER)* Did you give that answer to that question at your deposition?

A. Yes, I did.

Q. Do you now want to change your mind as to whether Zimmer showed H.M. Design the Stryker battery-operated products to H.M. -- do you want to change your mind as to whether Zimmer did show Stryker's products to H.M. Design because they didn't know anything about what they were designing?

A. I would say that's a fair statement, yes.

* * * * *

**[485] DIRECT EXAMINATION OF WILLIAM DONIZETTI**

Q. The question was did Zimmer take apart the Stryker SurgiLav Plus, take those parts and put it into a Zimmer prototype of the Pulsavac Plus?

A. I believe there was one item, yes.

Q. That's not benchmarking, is it?

A. That particular item was determined that it was patented, so we did not use it.

Q. Let me ask – taking somebody's part, putting – and you knew it was patented, the product was patented – and putting it into a prototype for your next product, is that benchmarking?

A. It's just a -- it's a – it was a valve.

Q. Was that benchmarking?

A. Yes.

Q. It was?

A. I'm not sure if it was benchmarking or not.

Q. That's right. Benchmarking is when you're testing performances between products, right?

A. You're trying to determine, yeah, what the product – how the product works.

Q. Yeah. Taking parts from your competitors to make your product, that wouldn't be benchmarking, would it?

A. I'm not sure.

Q. But Zimmer did take the valve system out of Stryker's SurgiLav Plus and put it into their prototype that was going to be used as a prototype for the Pulsavac Plus; do you agree with that?

A. Yes.

Q. Do you have the Stryker SurgiLav Plus up there?

A. Yes.

Q. Do you see that the tube and the wiring from the battery pack to the hand piece is connected together?

A. Yes.

Q. Would you call that coextruded?

A. I believe so, yes.

Q. Now, did Zimmer ever have a – and that's – let me back up. Now that's a wire, electrical wire, coextruded to a liquid tube, right?

A. Yes.

Q. Did Zimmer ever before seeing Stryker's SurgiLav Plus have an electrical wire coextruded to a tube for any pulsed lavage system?

A. No, sir.

Q. That was all new to Zimmer, wasn't it?

A. Yes.

Q. That's what Zimmer copied from Stryker, isn't it?

A. I guess you could say that.

Q. We will because we are.

Let me show you the paragraph on Section –

Call-out page 13.2. The third bullet point paragraph could you expand. Okay.

On that second – starting the second sentence it says, "It must be noted that Zimmer Patient Care does not have the capability to coextrude the wiring with the tubing as seen on competitive units; therefore, this type of design would have to be verified with the research of vendors and cost estimation of manufacturing and assembly."

Do you see that?

A. Yes.

Q. Zimmer hadn't done it before, but they certainly were going to copy Stryker on coextruding wires to tubing, right?

A. We hadn't done it before.

Q. And you copied.I mean, you stated just a second ago you copied.

A. Yes.

Q. Could you please pull up the '383 patent, Trial Exhibit 3. Could you go to claim 19. Okay.

Do you have an understanding that the Court has already found that Zimmer infringes claim 19 of the '383 patent?

A. I do now, yes.

Q. You do now.Okay. This claim talks about "Inlet line is a flexible hose that extends from outside said housing

into said housing. Said conductor assembly is attached to said hose so that at least a portion of said conductor assembly extends along said hose."

Now, isn't that patent talk for coextruding and combining electrical wire with a tube?

A. I believe it is.

* * * * *

**[502] DIRECT EXAMINATION OF WILLIAM DONIZETTI**

Q. And you said the Var-A-Pulse didn't have it, but does the Zimmer Pulsavac Plus product use a gear eccentric shaft which provides reciprocating motion for the pump?

A. Yes, it does.

Q. Did Zimmer copy from Stryker?

A. I don't know if we copied.

Q. Okay. Well, let me ask it this way: Where did you get the idea?

A. When we were in Indiana our product development group was out there, and we started developing the internal pumping mechanism for this, and one of our -- that's when we started using that, that eccentric shaft.

Q. And that was after you saw the Stryker SurgiLav Plus product, right?

A. It could have been. I don't know that for sure.

Q. Likely?

A. Maybe.

Q. Okay. I'll take "maybe."

And you opened up the SurgiLav Plus product, right?

A. Yes.

Q. And you saw that gear eccentric shaft in there, didn't you?

A. Yes.

Q. Did Zimmer -- I'm going to talk about another potential copying. Did Zimmer copy from Stryker the metal gear shaft to be used on the pump gear to solve heat problems?

A. I'm sorry, could you repeat that again?

Q. I can. Did Zimmer copy from Stryker the metal gear shaft used in the Pulsavac Plus on the pump gear to solve heat problems?

A. I know we have a metal shaft to go into the gear, yes.

Q. I'm not sure what the answer was. Did Zimmer copy that from Stryker?

A. I don't recall if we actually looked at it to say, "Let's use a metal pin like Stryker." I know we used a plastic one for a while and it didn't work, so we went to a metal one.

Q. Okay. Let's check out where you got the solution. Could you please pull up -- look in your book, please, to Exhibit 18. Are you there?

A. Yes. Sorry.

Q. What is Trial Exhibit 18?

A. These are meeting minutes from H.M. Design to Tim Donaldson on February 15th and 16th, 1999.

Q. And this document was provided to Zimmer?

A. Yes.

*MR. VOGLER:* Your Honor, I move admission of Plaintiffs' Exhibit 18.

*MR. HAYES:* No objection, Your Honor.

*THE COURT:* It's admitted without objection.

Q. (*MR. VOGLER*) Can we then pull up on the screen the second page of Exhibit 18. And expand and highlight the top bullet point.

And we're talking about the metal gear shaft in the previous questions, and here is what it says in a Zimmer document: "A metal gear shaft will need to be used on the pump gear because of the heat buildup from the high number of RPMs in the motor. This was a problem that the competition Stryker had and was resolved with a metal shaft."

Do you see that?

A. Yes, sir.

Q. This is one of the documents that talks about the design of the Pulsavac Plus, isn't it?

A. Yes.

Q. Now, would you agree with me Zimmer was able to find the solution to the heating problem by copying Stryker?

A. I know we used a plastic one, it didn't work, so we had to make it better, and we went to a metal one.

Q. It didn't work because it overheated, right?

A. That's correct.

Q. And the solution was Stryker's metal shaft, right?

A. The solution was metal.

* * * * *

**[622] DIRECT EXAMINATION OF NEIL SHEEHAN**

Q. How does copying, if at all, affect an analysis of willful infringement?

A. It is a supporting piece of analysis. So if copying is also found, that supports the -- my -- well, as you'll see, supports my view that this infringement was and still is willful.

Q. What is your opinion about whether Zimmer copied Stryker's commercial products?

A. Yeah, they have. There have already been admissions in this courtroom about that by Zimmer wit-

nesses. And I concur, or they concur with me, that there has been copying. And I will show you.

*MR. VOGLER:* Can we please place up on the screen Exhibit 260.

And, for the record, these are quotes from Exhibit 23 which is in evidence.

Q. (*MR. VOGLER*) Mr. Sheehan, what is the purpose of Exhibit 260?

A. Okay. I think you may have seen this before. This is an internal document called a business case. And as a Zimmer witness testified accurately, this is where you put together the documentation as to why you want to spend "X" amount of dollars to do "X" -- to do a project. It gets sent around to all the departments, especially the money department, to justify the expenditure. So in connection with that, a lot of things are said in this kind of document to convince the bosses, "Hey, we have to spend this dough."

Q. And how does it relate to willful infringement?

A. Well, let's take a look at the highlighted portions. It acknowledges Stryker was the first company to capitalize on this. And they are talking about the disposable self-contained unit with their battery system, the SurgiLav Plus. Remember, that's the first Stryker product. That's the white one.

"This product was able to take operating room business away from us over the past three years." So this goes to motivation. They are getting their clock cleaned a bit here, and so they are highly motivated to try to come up with something.

Secondly, in one section, page 10 -- that's what this number over here means, by the way. This .10 means it's on page 10. Stryker's strength is that it's a market innovator. Pioneer.

Q. Okay. Can we please put up on the screen the next slide, Exhibit 261, which also contains information from Trial Exhibit 23.

How does the information on Exhibit 261 relate to willful infringement?

A. Well, this is from the same document on different pages, and it confirms -- once again, this goes to motivation. Zimmer Patient Care Division attempted to compete in the disposable battery system market. That's shorthand for having the batteries separate and having a self-contained handpiece like the SurgiLav Plus. And Zimmer responded with the Var-A-Pulse in March of '96 three years after the release of the SurgiLav Plus.

This is a product that was rushed to market and has been dogged by reliability and functionality issues. So their first response was a dog, and so now "We've got to do something about that."

They acknowledge to themselves it was a poorly designed product with little thought given to ergonomics or user needs. It's already been explained, and you can see it here, that it's ergonomically deficient, that that's how the hand interacts with the device and their heavy eight batteries on the six-speed bottom part. They acknowledge that the Var-A-Pulse, their first shot, had poor flow rate. The tips fell off.

Additionally, they highlight again that Zimmer's market share has eroded due to poor performance and product-quality issues. They are kind of beating a dead horse at this point. They have got their problems.

"Their current design is not only forcing us out of the disposable market but may also eliminate us from being a player in the lavage market in the future." So we're talking up against the wall. And that would be the motivation. Goes to motivation to copy.

Q. Can we please place up the next exhibit, 262, which contains information from Trial Exhibit 14 which is in evidence.

What -- how does the information of Exhibit 262 relate to willful infringement?

A. This continues to tie into the evidence. There's -- motivation is still in here. This -- oh, this document, by the way, is a proposal from H.M. Design, the folks that they decided to hire, notwithstanding their lack of experience, to do -- to do this project. And their objective is to recapture the lost sales and improve product liability. Sales force confidence is obviously having -- is at a low, and they are acknowledging that performance leadership is coming from Stryker.

And the item that you need -- the first item -- there are multiple bullet points, but this is the first one: Sample of Competitive Units. And it is my understanding and I believe the testimony of Mr. May is that that was a Stryker unit that they had, the Surgi-Lav Plus.

Q. How does the information from Exhibit 14 relate to willful infringement?

A. Oh. It shows the intention to go ahead and copy the SurgiLav Plus. To copy Stryker's products.

Q. Could we please place up the next exhibit, 263, which comes from Trial Exhibit 13 which is in evidence.

How does the information on Exhibit 263 relate to willful infringement?

A. Well, this is more evidence of copying. This is a -- shortly after that proposal by H.M. Design they have a meeting, and in attendance are a couple of folks from Zimmer, both of whom you've met, one live and one on videotape. And they are acknowledging that they do not have the capability to coextrude the wiring with the tubing as seen on competitive units. And this ground has already been covered, so I'll try to be as brief as possible. They are just saying "We can't do this."

And what we all know is the SurgiLav Plus was the first device in this market to do that. They obviously recognized the value of it, and so they are going to have to look into having somebody figure out how to do that since they can't do it with in-house.

And finally, this bullet point down here goes to that issue, this odd issue that a prototype was supplied to H.M. Design that had in it a dual-valve configuration, and now you're talking about the pump. This is the configuration that allows the pump to push water out and then to reload some water, push some more water

out, reload. So you need two valves to do that. And the prototype actually had a Stryker part in it. That's not benchmarking. That's odd.

Q. And on the first box where it talks about basically coextruding electric wire to the tubing, what do you recall about -- from the testimony of Mr. Donizetti as to copying or not copying that feature?

A. I believe he acknowledged that they copied it from Stryker.

Q. Could we turn to the next slide, 264, please.

A. And I would add that that is a limitation in some of the infringed claims of the '383.

Q. Yeah, let's clear that. What do you mean by it's a limitation in one of the infringed claims?

A. In the '383, which you haven't had the need to see but it's in this same family, same specification, but those claims -- and there are many more claims in that one; there were 16 infringed claims versus four infringed claims in the '807, and we're dealing with just the one in the '329 -- there are what are called dependent claims. And I don't think that's been discussed, so I'll take a moment.

An independent claim is a claim that has everything described in it. A dependent claim says everything that's in the claim above but also with the additional limitation that I only mean brown whistles or red potatoes, something like that. It's a further narrowing, but it is a separate invention, so it will say "The device as in Claim 1" -- so it says "Claim 2, the

device as in Claim 1 wherein," and then it adds another limitation.

So this attaching of the wire to the tubing occurs in those dependent claims. So there's your lesson for that.

Q. I'm actually going to go to Exhibit 265.

Sorry. I changed my mind. 264 first. I apologize.

Mr. Sheehan, how does the information on Exhibit 264, which comes from Trial Exhibit 17, relate to willful infringement?

A. Well, it sets up the -- oh. First, this is a -- meeting minutes. There were -- there was a meeting. This was written on the 11th, so there was some meeting prior to that. All these folks from Zimmer were there. And it reads "The operation of the punk --" "Punk." Sorry. "-- the pump mechanism was reviewed. It was noted that the Stryker -- that Stryker utilizes a combination duckbill valve and umbrella valve. This application has been patented. The design team will utilize a duckbill valve and an umbrella valve in the new design."

Now, at first blush -- and you saw Mr. May seem awfully confused by it, and it is confusing. It looks like it says "This is patented, but we're going to go do it anyway."

I think, in fairness, the combination duckbill/umbrella valve is a very clever invention by Stryker, and also manufactured by Vernay. You've heard that company mentioned. I've worked with them for decades. Terrific company in Yellow

Springs, Ohio. And it's a combination duckbill where it has an umbrella valve tied to it. Trust me, it's cool.

So it would appear here that the design team decided to -- it's hard to tell, but maybe they used -- they were going to say "We'll use a duckbill and an umbrella" or -- it's not clear.

Now, we saw evidence when a counsel for -- not counsel -- a witness showed you their accused products and showed that they didn't have a duckbill, that they were using two umbrella valves. So in the end, that precise thing was not particularly copied, but the functioning of those valves is -- they are the same.

Q. And how does Zimmer looking at Stryker's system and its functioning relate to Zimmer's copying?

A. Well, it tells me that the reference, the paradigm, the model for the artist -- you know, the artist painting and has a model over here, you paint the model -- was the SurgiLav Plus. It was not that horrible Var-A-Pulse that didn't work very well that everybody said was terrible, et cetera. Had batteries in a circle like a Russian spacecraft and six speeds. It just -- that wasn't the reference to it while they were working on the Pulsavac Plus. The inspiration, the source of much of the -- what became the Pulsavac Plus was the SurgiLav. Were Stryker products.

Q. Okay. Can we go to the next slide, slide 265, please. This is information from Trial Exhibit 18.

Mr. Sheehan, how does the information on slide 265 relate to willful infringement?

A. Certainly. This is shortly thereafter, I guess it's the next month, it says February, and they are discussing meetings that occurred on the 15th and 16th. And some more Zimmer folks are there. And here is this item, you've seen it before, that there was a -- "a metal gear shift will have to be used on the pump gear." And the pump gear spins around pretty fast. And you would get heat buildup from the high number of RPMs -- revolutions per minute -- from the motor. This was a problem that the competition Stryker had and was resolved with a metal shaft.

Now, the first question is: How did they know Stryker had that problem? Are they going through dumpsters? unless they had been taking apart Stryker units, which is not in and of itself inappropriate, but they have obviously been keeping track of this. Stryker solved it by using a metal shaft. And you might say, "Oh, well, that doesn't sound like much of a breakthrough." Well, it is, because the plastic shaft you would have gotten for free. It would have been part of that molded -- you saw half of a housing. You could have molded that shaft coming right out and gotten it at the same time you molded the housing parts. And cost is huge. Cost is -- you know this -- cost is huge in the medical device industry. So -- and I believe finally Mr. Donizetti admitted that Zimmer copied Stryker's metal shaft.

Second bullet point: "There will be no designs with batteries in the handle." Okay, that's out. It tells you Var-A-Pulse was not their reference. Var-A-Pulse had eight batteries all around and six speeds. That is what the -- oh, then it says, "This information was derived from customer input from the academy show, and this is what the competition is currently doing --"

well, it says "during," but it's supposed to be "doing" -- engineers don't often use the best English -- "with their design."

So they are just saying "Stryker has the batteries outside of the unit. We need to do that too."

And by the way, those are also claim limitations in the '383.

Finally, the last bullet point, box point, "Need a form model to help understand the concept of the shape and multiple hand positioning." Var-A-Pulse could be only held one way. The SurgiLav Plus, which is that very elegant white object, device, could be held all along it. Beautiful.

They want to have multiple hand positioning, so they copied that aspect.

But wait, there are some concerns that the design may look too much like the competition. Now, here somebody among the group is sort of saying, "Whoa. Maybe we better dial back the similarities." So for me, that's continued proof, evidence of Zimmer's copying.

Q. Mr. Sheehan, were you here when the deposition testimony of -- Mr. Daniel Olson, one of the designers of the Zimmer's Var-A-Pulse, testified?

A. Yeah. He was the nice fellow with the beard. Nice fellow.

Q. Could we call up a portion of his -- a very short portion of his testimony.

Okay. Mr. Sheehan, how does the information or the testimony of Mr. Olson relate to willful infringement?

A. Well, we can just read along the highlighted area. He said this. You saw him not live but on the screen, on TV. "We were trying to -- we didn't want to go into as much gear-driven as we could, we wanted to avoid that because the gears just -- they are a pain."

And he's right in the sense it takes a lot of good engineering to develop this gear-train system.

And then a second answer, he acknowledges "We would probably -- we would be probably copying somebody if we had gone with the gear drives." That "somebody" would have been Stryker.

Q. And how does that relate to willful infringement?

A. Well, as you'll see shortly, the identical gear system in the SurgiLav Plus and in the InterPulse show up in the Pulsavac Plus.

* * * * *

**[642] DIRECT EXAMINATION OF NEIL SHEEHAN**

My question to you, just generally, what is your opinion regarding the reasonableness of Zimmer's invalidity defenses?

A. I found those too to be -- those as well to be unreasonable.

Q. And what's just a general overview basis for that?

A. Certainly. As you saw in the opening presentation by Mr. Vogler, the Patent Office in granting all of these patents, all of the claims in all of the patents, looked at essentially the same prior art that is now being presented by Zimmer with a higher burden of proof required, which is clear and convincing evidence. What you may not know, that in the Patent Office the burden of proof is preponderance of the evidence. But that's inside the Patent Office when they issue the patent. To overturn a patent, you need that higher standard of clear and convincing evidence. And furthermore, if the art has been before the Patent Office before or is cumulative on it, then that burden is particularly hard to meet.

So the bulk of the prior art that Zimmer is relying upon was either before the Patent Office or cumulative, meaning the same information or the same type of product. And that is another reason why it's an unreasonable defense. You're just bringing out stuff that the Patent Office already looked at and looked at carefully.

These file histories are very thick. This is not about some new piece of prior art that they found in Germany or somewhere like that. This is just -- it's just unreasonable to think that the same prior art now with a higher -- doubly higher standard is going to carry the day. It's just not reasonable.

* * * * *

## [703] CROSS-EXAMINATION OF NEIL SHEEHAN

Q. And you may have said this, I don't remember, but Zimmer's Var-A-Pulse is prior art to the '807 patent, correct?

A. Correct.

Q. So in claim 45, you disagree -- I'm sorry -- you agree that the Var-A-Pulse satisfies all of the limitations except the lock assembly limitation?

A. Correct.

Q. On claims 50 through 52 -- I don't know -- just to be clear, because I don't know if you went all the way down and looked at those -- you agree that the Var-A-Pulse has those characteristics as well, correct?

A. You're correct. I didn't look down, but let me just make sure. Correct.

Q. So out of all of the limitations of the asserted four claims of the '807 patent --

A. Uh-huh.

Q. -- you agree that they are all present in Zimmer's own prior art Var-A-Pulse product --

A. Correct.

Q. -- except the lock assembly?

A. Right. This being the independent claim, and these dependent claims since they depend from the inde-

pendent claim, this limitation is also built into these three claims, and so that's true for all of them, yes. "This limitation" being a lock assembly mounted to the front end.

Q. So if -- I'll speak up. If I were to -- if I put Var-A-Pulse -- if I put Var-A-Pulse at the top and then wanted to indicate the elements that the Var-A-Pulse has, I could check everything but lock assembly, correct?

A. Correct.

Q. Which I think I've done accurately close up. Correct?

A. Yes.

Q. Now, you understand that Zimmer asserts that the Var-A-Pulse also satisfies the lock assembly limitation, correct?

A. That's my understanding, yes.

* * * * *

## [758] REDIRECT EXAMINATION OF NEIL SHEEHAN

Q. And what is your opinion as to whether it is reasonable for Zimmer to rely upon that combination of Grulke and Drews 2 for its patent invalidity argument?

A. It's unreasonable. It is not reasonable.

Q. Okay. Let's break that down. First of all, what's the burden the Patent Office has for rejecting claims?

A. Interestingly, inside the Patent Office the burden is different from what we face here. Here Zimmer must show by clear and convincing evidence the higher standard. In the Patent Office it's the lower preponderance of the evidence. So the Patent Office has a lower standard to meet when they do office actions.

Q. So, I mean, what does --

MR. HALES: If I may, I want to lodge the objection to Mr. Sheehan, like he was at the end of the prior week, talking about the law as if he's an expert on law.

THE COURT: All right. He, of course, can only talk about his expert opinion, and to the extent anything he says about the law differs from what I say about the law, the jury has to follow what I say about the law. Okay?

Go ahead, Mr. Vogler.

MR. VOGLER: Okay.

Q. (BY MR. VOGLER) So how does that make a difference in the different burdens between the Patent Office and what Zimmer has to prove here in this case?

A. Well, the preponderance of the evidence is more likely than not. You know, 50/50. 51. Just past the 50 yard line. Clear and convincing is just -- it's just a much higher standard to reach.

Q. Okay. Now let's -- the '383 patent is one of Stryker's patents in this case, right?

A. Yes, sir.

Q. Okay. What is your understanding as to whether the Patent Office already considered the Grulke patent and the Drews 2 patent when it allowed the claims of the '383 patent?

A. It had -- the Patent Office had already seen and considered Grulke and Drews 2.

Q. And what is your understanding of the effect that the Patent Office already considered those when they granted the '383 patent?

A. My understanding of that is that reaching that already high clear-and-convincing standard is especially difficult given that the Patent Office already looked at those.

Q. Could you please put on the screen Exhibit 3 from the '383 patent at call-out page 3.24. There you go.

Mr. Sheehan, this is from the '383 patent?

A. Right.

Q. Right from it, right?

A. Yes, it is.

Q. Okay. What's your understanding of what Stryker was telling the Patent Office in its background of the invention?

A. Well, in the specification submitted to the Patent Office -- and this goes back to the very first time it was submitted, the earliest application back in '93 --

here the inventors, and one of whom is Mr. Grulke himself, the title on the patent '383 is Arnett, et al. -- et al. means "and others," et alii, from the Latin -- here the inventors are actually pointing out to the Patent Office how Grulke and that the Grulke 5,046 -- sorry, I'm pointing with my finger -- the Grulke 5,046,486, and that's the patent we're calling Grulke, they are explaining why their invention here in the '383, their claims differ from this older prior art in the highlighted section. And I'll read this just to make sure there's a record. "As compared to the above-mentioned prior device --" meaning the Grulke air-actuated device, the nitrogen -- "a pulse irrigation handpiece embodying the present invention is producible at a lower cost, produces sharper liquid pulse transients, particularly the pulse-off transient, requires no connection to any operating power source, for example, compressed air or to an external pump, and instead is self-contained, requires only external connection to a liquid irrigation source, for example, conventional irrigation liquid bag, provides better suction when suction is required, is more compact, and is conveniently shaped to be held either as a pistol or a wand." By the handle or barrel.

So what you have here is the teaching away. This is called teaching away when the inventors in their patent application and their specification teach away from using an older piece of prior art in a validity analysis.

Q. Okay. Could I please pull up call-out page 3.5. Okay. Obviously, we're on cue.

In the '383 patent under the references cited there's the 4,817,599 Drews patent?

A. Yes.

Q. That's the Drews 2 patent, right, we're talking about?

A. That's my recollection of the number.

Q. And what does this tell you that's in the '383 patent?

A. That, in fact -- this is just the proof that they considered -- that Drews 2 was before the Patent Office, along with Grulke of course.

Q. Okay.

A. And numbers of others.

Q. Okay. Could you pull up Trial Exhibit 288.

Mr. Sheehan, what are you trying to show here with Exhibit 288?

A. Well, this sort of emphasizes what Mr. Grulke and his co-inventors said to the Patent Office regarding the '383 patent. The original Grulke which was considered by the Patent Office is a pressurized gas-powered device. In other words, has the large nitrogen tank that's hooked up here. Here is the P for pressure. It goes up into this motor pump combo. I'll come back to that. That's important. And here is the exhaust. And then you have your liquid going in and your suction coming out here.

There's no electric motor. There is absolutely no electric motor. This has nothing to do with electricity. The power source it requires connection to is, of

course, this large tank of pressurized typically nitrogen.

So there's nothing in here that asks or would be reasonably -- reasonable to do in terms of adding anything electric to it. And one of the extra reasons is that this is not a motor and a separate pump. This is a motor/pump combo. Inside of that is a piston that goes up and down, and underneath it is the nitrogen, and above it is the liquid. It's one thing. So you can't say, "Oh, I'll separate the gas source and put some electric motor down here." It wouldn't work.

So that's the purpose of that slide.

Q. Could we turn to the next slide, 290, please.

Mr. Sheehan, what are you trying to show on Exhibit 290?

A. Well, we've already established that even starting with Grulke is unreasonable. Now, to further combine that with Drews 2, Drews 2 is an eye-washing system. Drews 2 is used in a delicate eye surgery. So to the extent there is water flow, it's dainty and it's sort of like (making noise). Very dainty. And so it's very low pressure. It's not suitable for cleaning bone or anything like that. Also, there's no suction. Remember, suction is part of this whole '383 invention. This just delivers fluid here. Oh. And it's not disposable. Grulke, famously, says "I'm disposable." So this is not a disposable system.

And it also is operated or partly controlled by this foot pedal, which would be in -- you know, in the sterile field.

And finally, this is a rotary peristaltic motor, the kind of motors I work with in the dialysis world. And the purpose of that motor is gentleness. The reason you use rotary peristaltic pumps in dialysis is because you don't want to damage the red blood cells. That's called hemolysis. You break a red blood cell, it doesn't carry oxygen. And there have been deaths associated with poor pumping in dialysis clinics.

So the purpose of using this kind of pump here is for the gentle swish-swish that would occur. And this switch, by the way, is not an on/off switch. This switch is a choice-of-mode switch. And you can either have it in a direct irrigation flow or you can switch it back to what's called to and fro. In fact, the name of that patent is the to-and-fro washing system.

Q. Okay. What's your -- what do you conclude about the validity of the '383 patent claims in view of your analysis of Grulke and Drews 2?

A. Well, they are valid and not obvious.

Q. What is your understanding of the role of objective evidence in the analysis of whether a patent claim is valid?

A. The role of objective evidence is by my lights very important. It's different from the let's call it subjective evidence of looking at two pieces of prior art. And in this case Grulke and Drews 2, which I think it's clear that they don't render the claims obvious, but there's more reasons.

Q. Could you please put on the board Trial Exhibit 291.

MR. HALES: Your Honor, I object. I think we're beyond the scope of my cross-examination on this material.

THE COURT: Well, I think the cross-examination certainly touched on what we've heard so far, the issues involving the handle, the issues involving the '504 application, and more generally the question of reasonableness of positions on obviousness. So I think it's within the scope of proper redirect. Go ahead.

MR. VOGLER: Thank you, Your Honor.

Q. (BY MR. VOGLER) Mr. Sheehan, what is your understanding as to whether the examiner in the '504 patent application had the objective evidence showing nonobviousness of Stryker's inventions?

A. The examiner would not have had that information. That's essentially never the case. The examiner is simply looking at the pieces of prior art. Examiners, in my experience, never see this.

Q. What is your opinion of why that would make a difference?

A. Oh, it makes a huge difference, because to the extent anybody were inclined to think that two pieces of prior art that might look like, well, maybe you could combine them, and, well, maybe you could get the invention, these five here would tend to push those pieces of prior art away.

If somebody says, "Oh, well, that's obvious," well, if it were so obvious, then why would there be praise in the industry? Why would there be copying, et cetera? That's the setup, if you will, for these ques-

tions which are -- have been established as objective indicia or sometimes called secondary considerations.

Q. Now, what real-world evidence are you aware of in this case that would support that Stryker's patents are not obvious?

A. Sure. Well, we can just --

Q. Just briefly.

A. -- walk down these very quickly.

Praise in the industry. Well, we heard that happen a little over a week ago, Mr. Donizetti allowing how Stryker's products were pioneering. If not revolutionary, they were pioneering. Copying, I believe --

Q. Let me back up on that pioneering.

A. Oh, sure.

Q. Now, you've been involved with a lot of patent cases, right?

A. Yes, sir.

Q. And how often have those cases involved pioneer inventions like the type in this case?

A. Very rarely.

Q. Okay. Continue with the evidence.

A. Copying, I think, we've already -- I believe I've shown you enough to indicate that copying has gone on. There's been a lot of evidence about that.

Long-felt and unmet need. Those large boxes which are no longer gracing the well area here, that was the standard. And even the Grulke device with its large nitrogen tank, that was the standard. So -- and that was the standard for more than a decade. So was there a long-felt and unmet need for the '383 invention? And for that matter the '329 or the '807 invention? Absolutely.

Now, evidence of nonobviousness additional is whether the patent has been licensed by others. And in this case, in this situation it's my understanding that Davol has taken a license from Stryker.

And finally commercial success. The question is, "Hey, if this were so obvious, how come they sold so many? Why didn't somebody else do it?" And I'm pretty sure my numbers are correct, but to date the devices sold by Stryker, Davol, and Zimmer have been more than a billion dollars. I think maybe 1 1/4 billion maybe. But I know more than a billion dollars since 1993. So that's what I would call commercial success.

Q. Okay. Now, Zimmer's attorney asked you some questions about the abandonment of the '504 application. Do you recall that?

A. I do.

Q. What's your opinion on that?

A. Well, "abandoning" is kind of a cold word. It's hardly that.

When one files a continuation, which happens all the time, it's one of the many options you have during the prosecution of a patent, you're required to aban-

don the other one. So you don't abandon it first and then do a continuation, you do a continuation, and then by law the Patent Office says you must abandon the prior one. You can't have two sets of the same claims being looked at by the Patent Office at the same time.

Q. In your book there's an Exhibit 38. Could you turn to that?

A. I have it.

Q. What is Exhibit 38?

A. Exhibit 38 is the continuation application, what is known as the '540.

MR. VOGLER: Your Honor, I move for admission of Trial Exhibit 38.

THE COURT: Any objection?

MR. HALES: No objection, Your Honor.

THE COURT: Okay. All right. It's admitted without objection.

Q. (BY MR. VOGLER) Mr. Sheehan, what's the date of the continuation of Exhibit 38?

A. That would be March 8th, 2012.

Q. And how does that date relate to the date of abandonment of the '504 patent?

A. I believe the date of abandonment is about four days later. So this occurred in the appropriate order.

Q. Okay. Now, what is your understanding as to whether Stryker abandoned any of the claims of the patent application '504 and in the continuation?

A. In fact, Stryker didn't abandon any of the claims. All we saw earlier, or the week before last, was this one claim that counsel for Zimmer put up. In fact, there were 20, 20 claims within the '540 application that are at this very time still under the consideration of the PTO.

* * * * *

**[1386] DIRECT EXAMINATION OF CRAIG MILROY**

Q. I want to switch gears for a minute and take a look at Exhibit QF, which is the '504 application. We've seen this a number of times.

Can you turn in your binder to Exhibit QF, please, Mr. Milroy.

A. QF. Yes.

Q. Did you consider this in forming your opinions in this case?

A. Yes, I did.

Q. Ken, can we have page 13 of Exhibit QF.

I would like to highlight paragraph 11 to the end.

Mr. Milroy, what do we see here?

A. These are comments by the Patent Office. Stryker has applied for a patent which we call the '504 applica-

tion. They have applied for that, and the Patent Office has said, "No, we reject claims 31 through 50 based on Grulke and Drews."

Q. And this is the board we've seen before, correct, Mr. Milroy?

A. Yes, we have.

Q. So what do we see on this board?

A. On the left we have the claims, claim 1 of the '383 patent and all of its elements.

On the right-hand side we see claim application, '504 application with claim 31. You can see that all of those elements on the left are listed on the right with one additional element.

Q. And what did the Patent Office say about the claim elements on the right?

A. The Patent Office dismissed all of them.

Q. In view --

A. Rejected all of them in favor of information they found from Grulke and Drews II.

Q. And is that the same Grulke and Drews II prior inventions we've been talking about today?

A. Yes, it is.

Q. So what effect, if any, does this Patent Office's rejection of the '504 application have on your opinions

with respect to whether or not claims 1, 2, 3, and 8 of the '383 patent are invalid as obvious?

A. Well, I looked at it and thought it was valid and it – it was invalid and obvious. And the Patent Office looking at something very similar said the exact same thing.

Q. Just one follow-up. What is your understanding of Stryker's response to the Patent Office's rejection of the '504 application claims?

MR. VOGLER: Could you repeat that?

Q. (BY MR. HAYES) What is your understanding of Stryker's response to the Patent Office's rejection of the '504 application claims?

A. They abandoned it.

Q. Did they say anything in response to the Patent Office?

A. No, they didn't respond at all.

* * * * *

**[1402] DIRECT EXAMINATION OF CRAIG MILROY**

Q. And what steps have you performed -- we've talked about them, but can you generally highlight the steps you performed in performing your obviousness analysis in this case?

A. Sure. One of the things you look at is you look at the function of something. Is it functioning the same way? Is it known, first of all? Is it something that's

out there that they would know about? Does it function the same way? And do you get the same result? So if you look at those, then you can combine those as being obvious.

Q. Are you actually trying to combine, for example, the motor, little motor in Drews II into -- that exact motor into the -- for example, the Grulke device?

A. That's a good question. No, we're not taking -- when I compare Drews II to Grulke, I'm not saying you take the motor out of this device and put it in this device. That obviously wouldn't work. You would have to make some changes. But the question is would it have been obvious to someone who did this kind of work? Sure, I can put that in there without issues.

* * * * *

## [1434] CROSS-EXAMINATION OF CRAIG MILROY

Q. You've heard of the word -- phrase "pioneering invention"?

A. Yes.

Q. What is your understanding of "pioneering invention"?

A. I think a pioneering invention could be something that is really different. The pioneers found new territory in the United States. That's, I think, where the term comes from. So pioneering invention is something that is, you know, plowing new ground.

Q. And that's something -- a pioneering invention is a pretty big deal in the industry, isn't it?

A. Yes.

Q. And is it fair to say that pioneering invention normally changes the course of what people do in an industry?

A. Yes, I'd say that's valid.

Q. Would you agree that a pioneering invention in technology is normally considered a major leap in that technology?

A. I would agree with that, yes.

Q. Is it fair to say that pioneering inventions are never obvious?

A. Yes, I agree they are out of the ordinary often.

* * * * *

## [1444] CROSS-EXAMINATION OF CRAIG MILROY

Now, on the bottom left we see that you changed that. Before, you said the handle was from below the trigger to here, and now you've raised it up to the top of the trigger. Do you see that?

A. I do see that, yes.

Q. So you've had three positions on what a handle is in this case, correct?

A. Well, they are in three different areas of my report, and they may be in two different reports. So if you put it in context, then I'm trying to show where this device would be held by the hands.

Q. You know, you keep -- I don't want to argue with you, but you say "in context." This is the context. This is from your report where you show where the handle is, right?

A. It's one of the areas in my report where I show where -- where portions are to be held by the hand or hands or what I consider to be the handle of the object.

Q. Okay. Do you know what a declaration is filed by experts in patent cases?

A. I believe I do.

Q. You filed one in this case, didn't you?

A. Yes.

Q. And they are filed under oath to tell the truth?

A. Yes.

Q. I'm going to show you what you filed with the Court to tell the truth on Exhibit 298. Is that your signature?

A. Yes, it is.

Q. December 5th, 2011?

A. Yes, it is.

Q. And this is what you stated as the truth: "I understand that Stryker has proposed that 'handle' means any portion of a device designed to be held by a hand or hands. I disagree with Stryker's proposed construction of 'handle' --" and here is the important part -- "because it would render the barrel, the handle, and the entire housing of the claimed irrigation handpiece a handle." Do you see that?

A. Yes, I do.

Q. That's the truth, isn't it?

A. Well, it's the truth that I understood it at the time.

Q. Well, you can't tell the truth one day and then change your mind, can you?

A. It depends on the input I'm getting and the things I look at. Opinions change, and this is my expert opinion, and I attest that this is my opinion at this time.

Q. Hasn't this just proven Stryker's case of infringement? And I'll tell you why. Because a minute ago I got you to agree that the entire housing of the Pulsavac Plus includes where the motor is. Right?

A. I did say that the motor is in the barrel, yes.

* * * * *

## [1452] CROSS-EXAMINATION OF CRAIG MILROY

Q. And let's talk about the clear and convincing standard. What does that mean to you?

A. That means that you have to show that those prior -- the prior art, the prior inventions existed and show that they existed and show that they clearly existed before the date of the granted patent.

Q. That's not what clear and convincing standard means, does it?

A. Well, I'm not a lawyer.

Q. Weren't you here when the Court explained it?

A. Yes, I was.

Q. Okay. That's a good point. You're up here giving opinions of why you think the patent is invalid and you don't even know what clear and convincing standard you have to meet, do you?

A. No, I do. What I look at based on my experience --

Q. Then explain to us what is your understanding of a clear and convincing standard.

A. From a legal point of view or from my expert point of view?

Q. From your understanding.

A. My understanding of it is that you have to show that a person of ordinary skills in the art at that time would have had -- I have to show evidence that a person at that time would have had the resources available to them and it would have been obvious to show that these things existed.

Q. Is that your answer?

A. Yes.

Q. Okay. Mr. Milroy, what is your understanding of using hindsight in an analysis of patent validity?

A. You're not allowed to use hindsight.

Q. And what is hindsight?

A. Hindsight is looking back and saying, "Well, based on what I know now, that wouldn't be valid." And so you can't -- you have to put yourself back in the time, back in that time, not knowing what people know now but what they knew then, and, again, a person of ordinary skills in the art, what that person knew at that time.

* * * * *

## [1686] REBUTTAL DIRECT EXAMINATION OF NEIL SHEEHAN

Now, Zimmer has suggested that -- the question was Zimmer has suggested that it could not have copied Stryker's patents in suit because the patents issued after Zimmer completed its development work. What's your reaction to that?

A. Well, it's true that the patent issued later, but the product was on the market. And the question of copying goes to copying the commercial embodiment. So the product itself was on the market. That's what was copied. In fact, both of them, the SurgiLav Plus and the InterPulse.

Q. Of course, do you understand that on Exhibit 240 the original SurgiLav Plus patent application was filed in 1993?

A. Correct.

Q. And when was the first patent issued from the SurgiLav Plus application?

A. Yeah, this is really interesting. This is the very first patent that publishes on November 28th, 1995. And if you will remember, the specification -- that is all those words, all those pictures, all those descriptions in the patent specification -- they are all identical. So as soon as this published, Zimmer was on notice of what the specification was for every one of these patents, including the '329 and the '383, two of the patents in suit.

Q. And did Zimmer's product development for the Pulsavac Plus happen after 1995?

A. Oh, yes.

* * * * *

**[1869] THE COURT**

In this case Stryker argues both that Zimmer infringed and further that Zimmer infringed willfully. You must determine whether any infringement by Zimmer of valid claims under the patents at issue was willful.

Willfulness focuses on whether Zimmer acted recklessly. The burden of proof is on Stryker to prove by clear and convincing evidence that Zimmer acted

recklessly.

Stryker -- let me start this again. All right. So the burden is on Stryker to prove by clear and convincing evidence that Zimmer acted recklessly. Stryker must prove two things by clear and convincing evidence to prevail on this issue. First, from an objective point of view, that Zimmer acted despite a high likelihood that Zimmer's actions infringed a valid patent; second, that Zimmer actually knew or should have known this.

In making the first determination, you may not consider Zimmer's state of mind, rather consider objective factors such as whether Zimmer raised legitimate or credible defenses to infringement, even if they were not ultimately successful, or whether defenses appeared contrived and insubstantial. These objective factors should be the focus of your first inquiry.

If you decide that Zimmer acted despite an objectively high likelihood of infringement of a valid patent, you will need to consider the second part of the test. The second part of the test does depend on the state of mind of Zimmer.

Stryker must persuade you by clear and convincing evidence that Zimmer actually knew or should have known that its actions constituted an unjustifiably high risk of infringement of a valid patent. To determine whether Zimmer had this state of mind, consider all facts which may include but are not limited to whether Zimmer acted in accordance with the standards of commerce for its industry, whether Zimmer intentionally copied a product of Stryker's that's covered by the '329, '807, or '383 patents, whether there

is a reasonable basis to believe that Zimmer did not infringe or had a reasonable defense to infringement, whether Zimmer made a good-faith effort to avoid infringing the '329, '807, and '383 patents, for example, whether Zimmer attempted to design around the '329, '807, and '383 patents, whether Zimmer tried to cover up its infringement, whether Zimmer presented evidence that it obtained opinions of counsel to justify its infringing actions, and whether Zimmer's state of mind was affected by any of Stryker's conduct in the marketplace or the timing of Stryker's filing of this lawsuit.

UNITED STATES DISTRICT COURT
WESTERN DISTRICT OF MICHIGAN
SOUTHERN DIVISION

| | |
|---|---|
| STRYKER CORPORATION, STRYKER PUERTO RICO, LTD., and STRYKER SALES CORPORATION<br><br>Plaintiffs and Counter-Defendants,<br><br>v.<br><br>ZIMMER INC., and ZIMMER SURGICAL, INC.,<br><br>Defendants and Counter-Plaintiffs. | Case No. 1:10-cv-1223<br><br>Hon. Robert J. Jonker<br>U.S. District Judge |

**JOINT STIPULATION REGARDING DEPOSITION TESTIMONY PRESENTED AT TRIAL**

Plaintiffs Stryker Corporation, Stryker Puerto Rico, Ltd., and Stryker Sales Corporation ("Stryker") and Defendants Zimmer Inc. and Zimmer Surgical, Inc. ("Zimmer") hereby stipulate that the following deposition testimony was presented to the jury at the trial in this matter:[1]

---

[1] With regard to the videotaped deposition testimony of William Donizetti and Joan Fishel (Exs. C, F

1. Excerpts from the Videotaped Deposition of Daniel Henry Olson Played on January 16, 2013 at Dkt. No. 357, page 351, line 22 (attached as Exhibit A)

Page 6, lines 5-7
Page 10, lines 2-9
Page 22, lines 11-20
Page 67, lines 4-14
Page 67, line 24 – Page 68, line 10
Page 71, line 17 – Page 73, line 16
Page 74, lines 7-8
Page 74, lines 11-25
Page 75, line 2

* * * * *

**[71] Daniel H. Olson**

**Q. Uh-huh. Where in general did you look, then, for -- when you said you got the concept for the rotary linear pump from the field, what other types of products were you looking at?**

**A. Some of them, you know, all kinds of pumps, really. We were trying to -- we didn't want to go into as much gear driven as we could. We want to avoid that because the gears just -- they're a pain. Plus we –**

---

and H), the parties stipulate that the identified deposition testimony was presented to the jury; however, the parties disagree as to whether that testimony was offered for impeachment purposes or as substantive evidence. Zimmer alleges that the testimony is available only as impeachment evidence and not as substantive evidence; Stryker alleges that the testimony is available as substantive evidence.

Q. But the --

A. -- we would be probably copying somebody if we had gone with the gear drives.

* * * * *

UNITED STATES DISTRICT COURT
WESTERN DISTRICT OF MICHIGAN
SOUTHERN DIVISION

| | | |
|---|---|---|
| STRYKER CORPORATION, STRYKER PUERTO RICO, LTD., and STRYKER SALES CORPORATION, | : | CASE NO. 1:10-cv-1223 |
| Plaintiffs, | : | HON. ROBERT J. JONKER |
| v. | : | |
| ZIMMER, INC., and ZIMMER SURGICAL, INC., | : | |
| Defendants. | : | |

## VERDICT FORM

We, the jury, unanimously answer the questions submitted as follows:

### PART I: INFRINGEMENT

| | |
|---|---|
| Burden of Proof | The burden is on Stryker to prove Infringement by a preponderance of the evidence |

| | |
|---|---|
| Key Idea | Does the "accused device" have every element of the particular patent claim at issue, either literally, or by the "doctrine of equivalents"? |

1. Did Stryker carry its burden of proving by a preponderance of the evidence that Zimmer literally infringed Claim 2 of the '329 Patent?

__X__ Yes _____ No

2. Did Stryker carry its burden of proving by a preponderance of the evidence that Zimmer infringed Claim 2 of the '329 Patent by the Doctrine of Equivalents?

__X__ Yes _____ No

## PART II: INVALIDITY

| | |
|---|---|
| Burden of Proof | The burden is on Zimmer to prove Invalidity by clear and convincing evidence |
| Key Idea | Does "prior art" make the particular patent claim "anticipated" (a single reference), or "obvious" (multiple references in the context of secondary factors) to someone "skilled in the art"? |

For each of the following Claims, answer where requested whether Zimmer has carried it burden of proving by clear and convincing evidence that the Claim is invalid as "Anticipated" or "Obvious" (or both) under the instructions I have given you for each doctrine.

| | | ANTICIPATED? | | OBVIOUS? | |
|---|---|---|---|---|---|
| 1. | Claim 2 of the '329 Patent | ____Yes | X No | ____Yes | X No |
| 2. | Claim 45 of the '807 Patent | ____Yes | X No | ____Yes | X No |
| 3. | Claim 50 of the '807 Patent | ____Yes | X No | ____Yes | X No |
| 4. | Claim 51 of the '807 Patent | ____Yes | X No | ____Yes | X No |
| 5. | Claim 52 of the '807 Patent | ____Yes | X No | ____Yes | X No |
| 6. | Claim 1 of the '383 Patent | | | ____Yes | X No |
| 7. | Claim 2 of the '383 Patent | | | ____Yes | X No |
| 8. | Claim 3 of the '383 Patent | | | ____Yes | X No |
| 9. | Claim 8 of the '383 Patent | | | ____Yes | X No |
| 10. | Claim 10 of the '383 Patent | | | ____Yes | X No |
| 11. | Claim 11 of the '383 Patent | | | ____Yes | X No |
| 12. | Claim 13 of the '383 Patent | | | ____Yes | X No |

| | | OBVIOUS? | |
|---|---|---|---|
| 13. | Claim 17 of the '383 Patent | ____ Yes | X No |
| 14. | Claim 19 of the '383 Patent | ____ Yes | X No |
| 15 | Claim 20 of the '383 Patent | ____ Yes | X No |
| 16. | Claim 22 of the '383 Patent | ____ Yes | X No |
| 17. | Claim 24 of the '383 Patent | ____ Yes | X No |
| 18. | Claim 27 of the '383 Patent | ____ Yes | X No |
| 19. | Claim 38 of the '383 Patent | ____ Yes | X No |
| 20. | Claim 40 of the '383 Patent | ____ Yes | X No |
| 21. | Claim 46 of the '383 Patent | ____ Yes | X No |

## PART III: REMEDY

## SUBPART A: MONEY DAMAGES

| | |
|---|---|
| Burden of Proof | The burden is on Stryker to prove the amount of Money Damages by a preponderance of the evidence. |
| Key Idea | Assuming Zimmer infringed valid patent claims, what amount of money would put Stryker in the position it would have occupied without the infringement? |

1. Did Stryker carry its burden of proving by a preponderance of the evidence that Stryker is entitled

to recover any lost profits because of Zimmer's sales of infringing products?

__X__ Yes _____ No

If you answered "Yes," enter the dollar amount you find Stryker has proved by a preponderance of the evidence it is entitled to recover as lost profits:

$ 70 MILLION

2. What is the reasonable royalty rate (in percent) that you find Stryker has proven by a preponderance of the evidence should apply to any covered sales of infringing products by Zimmer, assuming validity and infringement of all three patents in suit?

25 % (double initial percentage of Duel license as we felt 32.2% was too high)

a. Do you find that the reasonable royalty rate would be any different if fewer than all three of the patents in suit are valid and infringed?

_____ Yes __X__ No

b. If "no," skip to the next question. If "yes," what is the reasonable royalty that you find Stryker has established by a preponderance of the evidence should apply for each of the patents in suit individually?

_____ % assuming that only the '329 patent is valid and infringed

_____ % assuming that only the '807 patent is valid and infringed

_____ % assuming that only the '383 patent is valid and infringed

3. What is the dollar amount of sales by Zimmer to which you find Stryker has proven by a preponderance of the evidence the reasonable royalty rate should apply, assuming validity and infringement of all three patents in suit?

$ 254,823,154

a. Do you find that the dollar amount of sales to which the reasonable royalty rate should apply would be any different if fewer than all three of the patents in suit are valid and infringed?

X Yes _____ No

b. If "no," skip to the next question. If "yes," what is the dollar amount of sales by Zimmer to which you find Stryker has established by a preponderance of the evidence the reasonable royalty rate should apply for each of the patents in suit individually?

$ 254,823,154 assuming that only the '329 patent is valid and infringed

$ 254,823,154 assuming that only the '807 patent is valid and infringed

$ 163,647,429.50 assuming that only the '383 patent is valid and infringed

## PART III: REMEDY

## SUBPART B: MARKING

| | |
|---|---|
| Burden of Proof | The burden is on Stryker to prove proper Marking by a preponderance of the evidence. |
| Key Idea | Did Stryker appropriately mark "substantially all" of its own products with the applicable patent numbers; and, if so, by what date? |

1. Has Stryker met its burden of proving by a preponderance of the evidence that it acted reasonably in choosing the mark product labels, rather than the plastic product itself?

__X__ Yes _____ No

2. Has Stryker met is burden of proving by a preponderance of the evidence that it marked substantially all of its products with the applicable patent number?

a. For the '329 Patent?

__X__ Yes _____ No

If yes, by what date? Dec 10, 2004

b. For the '807 Patent?

__X__ Yes _____ No

If yes, by what date? Dec 10, 2004

c. For the '383 Patent?

__X__ Yes _____ No

If yes, by what date? March 16, 2007

## PART III: REMEDY

## SUBPART C: WILLFULNESS

| | |
|---|---|
| Burden of Proof | The burden is on Stryker to prove Willfulness by clear and convincing evidence. |
| Key Idea | Was there an objectively "high likelihood" of liability; and, if so, did Zimmer know or should Zimmer have known it? |

Has Stryker met its burden of proving by clear and convincing evidence that Zimmer acted willfully in infringing any valid claims under the applicable patent?

a. For the '329 Patent?

__X__ Yes _____ No

b. For the '807 Patent?

__X__ Yes _____ No

c. For the '383 Patent?

__X__ Yes _____ No

## SIGNATURE BLOCK

**We, the jury, unanimously return this verdict form as our verdict in the case:**

Date: February 5, 2013 — Jury Foreperson

Date: 2/05/13

Date: 2/5/13

Date: 2/5/13

Date: 2-5-13

Date: 2/05/13

Date: 2-5-13

Date: 2-5-13

can we see all of the physical devices? claim charts as well

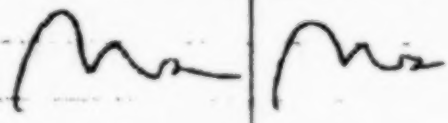

3:30
2-4-13
#1.

Would it be possible to have the large claim charts in the jury room to present and view all at once as a group?

2:4-13
4:40

(#2)

We've no where near a conclusion. See you tomorrow

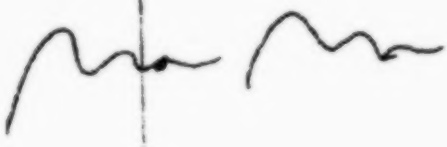

2.4.13
4.50

(#3)

---

Is there a copy of Mrs Lawton's Full report that we can reference?

Also, [redacted] would it be possible to watch the "Rick May" deposition video again?

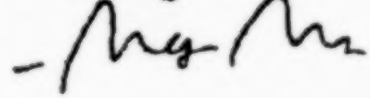

#3 12:[illegible]-5-13

Are we allowed to come up wit
our own figures for either
lost profits amounts or reasonal
royalty, i.e., come to a compro

If we find one claim of severe
obvious, does that make +
#4 whole patent invalid?

12:30 #4 2 5-13

We have come to a conclusion and filled out the verdict form.

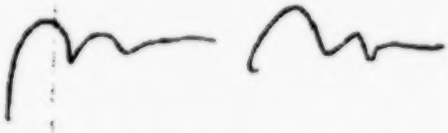

1:50 pm
2-5-13
#5

UNITED STATES DISTRICT COURT
WESTERN DISTRICT OF MICHIGAN
SOUTHERN DIVISION

STRYKER CORPORATION, STRYKER PUERTO RICO, LTD., and STRYKER SALES CORPORATION,

Plaintiffs and Counter-Defendants,

v.

ZIMMER INC., and ZIMMER SURGICAL, INC.,

Defendants and Counter-Plaintiffs.

CASE NO. 1:10-cv-1223

HON. ROBERT J. JONKER

**FINAL JUDGMENT AND PERMANENT INJUNCTION**

Based on the prior rulings of the Court and the verdict of the jury, and after considering the proposed forms of judgment submitted by the parties, IT IS ORDERED, ADJUDGED, DECLARED and DECREED that the Plaintiffs Stryker Corporation, Stryker Puerto Rico, Ltd., and Stryker Sales Corporation have judgment against Defendants Zimmer Inc. and Zimmer Surgical, Inc., as follows:

1. That Defendants Zimmer, Inc. and Zimmer Surgical, Inc. have infringed, literally and under the

doctrine of equivalents, claim 2 of Stryker U.S. Patent No. 6,022,329, claims 45, 50, 51, and 52 of Stryker U.S. Patent No. 6,179,807, and claims 1, 2, 3, 8, 10, 11, 13, 17, 19, 20, 22, 24, 27, 38, 40, and 46 of Stryker U.S. Patent No. 7,144,383;

2. That Defendants' infringement of the asserted claims of Stryker U.S. Patent Nos. 6,022,329, 6,179,807, and 7,144,383 was willful;

3. That this case is exceptional pursuant to 35 U.S.C. § 285;

4. That enhanced damages are appropriate pursuant to 35 U.S.C. § 284;

5. That the counterclaims and defenses raised by Zimmer are dismissed with prejudice, and that normal principles of issue and claim preclusion govern any unasserted counterclaims and defenses;

6. That Stryker is entitled to and awarded lost profits damages in the amount of $70 million;

7. That Stryker is entitled to and awarded supplemental damages in the amount of $2,351,257.66 for the period December 1, 2012 to February 28, 2013;

8. That Stryker is entitled to and awarded supplemental damages in the amount of $3,757,635 for the period March 1, 2013 to June 30, 2013;

9. That Stryker is entitled to and awarded treble damages on its lost profits award as well as its supplemental damages awards;

10.That Stryker is entitled to and awarded reasonable attorneys' fees in an amount to be determined following the entry of final judgment;

11.That Stryker is entitled to and awarded prejudgment interest of $11,167,670.50 on the jury award and the supplemental damages incurred from December 1, 2012 to February 28, 2013, prejudgment interest of $1,094,982.78 on the damages incurred from March 1, 2013 to June 30, 2013, and prejudgment interest calculated at a rate of 3.83%, compounded monthly, on Stryker's reasonable attorneys' fees and on any damages for the period July 1, 2013 to the entry of final judgment;

12.That Stryker is entitled to and awarded postjudgment interest in an amount to be calculated in accordance with the statute.

IT IS FURTHER ORDERED, ADJUDGED, DECLARED and DECREED that Defendants Zimmer Inc. and Zimmer Surgical, Inc. are hereby permanently enjoined from the manufacture, use, importation, sale, or offer for sale within the United States of the pulsed lavage products found to infringe claims 45, 50, 51, and 52 of U.S. Patent No. 6,179,807, and products no more than colorably different therefrom.

Dated: September 5, 2013

/s/ Robert J. Jonker
ROBERT J. JONKER
UNITED STATES
DISTRICT JUDGE

No. 14-1520

# In the Supreme Court of the United States

STRYKER CORPORATION, ET AL., PETITIONERS

*v.*

ZIMMER, INC., ET AL.

*ON WRIT OF CERTIORARI*
*TO THE UNITED STATES COURT OF APPEALS*
*FOR THE FEDERAL CIRCUIT*

## BRIEF FOR THE PETITIONERS


SHARON A. HWANG
DEBORAH A. LAUGHTON
STEPHANIE F. SAMZ
MCANDREWS HELD & MALLOY LTD.
500 West Madison Street
Suite 3400
Chicago, IL 60661
(312) 775-8000

GARRARD R. BEENEY
ROBERT J. GIUFFRA, JR.
SULLIVAN & CROMWELL LLP
125 Broad Street
New York, NY 10004
(212) 558-4000

JEFFREY B. WALL
*Counsel of Record*
AUSTIN L. RAYNOR
SULLIVAN & CROMWELL LLP
1700 New York Avenue, N.W.
Suite 700
Washington, DC 20006
(202) 956-7500
wallj@sullcrom.com

## QUESTIONS PRESENTED

Section 284 of Title 35 provides that, in cases of infringement of a valid patent, the district court "may increase the damages up to three times the amount found or assessed." The Federal Circuit holds that, before a district court may decide whether to enhance damages based on the totality of the circumstances in a particular case, the court must first find by clear and convincing evidence that (i) the infringer acted despite an objectively high likelihood that its conduct was infringing (which is reviewed de novo on appeal), and (ii) the infringer knew or should have known of the risk (which is reviewed for clear error).

The questions presented are as follows:

1. Whether the Federal Circuit has erred in imposing a rigid, two-part threshold test on the flexible text of Section 284.

2. Whether a district court has the discretion under Section 284 to award enhanced damages for the deliberate copying of a patented invention.

## PARTIES TO THE PROCEEDINGS

Petitioners are Stryker Corporation, Stryker Puerto Rico, Ltd., and Stryker Sales Corporation.

Respondents are Zimmer, Inc. and Zimmer Surgical, Inc.

## CORPORATE DISCLOSURE STATEMENT

Petitioner Stryker Corporation has no parent corporation, and no publicly held company owns 10 percent or more of its stock.

Petitioners Stryker Puerto Rico, Ltd. and Stryker Sales Corporation are indirectly wholly owned by petitioner Stryker Corporation.

## TABLE OF CONTENTS


Page

Opinions below ..... 1

Jurisdiction ..... 1

Statutory provision involved ..... 1

Statement ..... 2

A. Statutory history ..... 3

B. Factual and procedural history ..... 6

1. Zimmer's deliberate infringement ..... 6

2. Proceedings before the District Court ..... 8

3. Proceedings before the Federal Circuit ..... 10

Summary of argument ..... 10

Argument ..... 14

I. *Octane* and *Highmark* interpreted similar language in a related context to require a totality inquiry subject to deferential review ..... 15

II. As in *Octane* and *Highmark*, district courts applying Section 284 should consider the totality of the circumstances, based on a preponderance of the evidence, subject to review for abuse of discretion. ..... 17

A. Section 284 gives district courts the discretion to consider the totality of the circumstances..... 18

B. Section 284 leaves in place the usual preponderance-of-the-evidence standard..... 23

C. Section 284 requires that district courts' discretionary enhancements be reviewed for abuse of discretion..... 24

III. The history of Section 284 in Congress and the courts supports a totality inquiry reviewed for abuse of discretion..... 26

A. District courts traditionally conducted a unified inquiry that considered the totality of the circumstances..... 27

B. District courts generally did not treat willfulness as a prerequisite for enhanced damages..... 29

C. Appellate courts reviewed enhancement decisions for abuse of discretion..... 34

IV. A totality inquiry informed by history will protect property rights and promote innovation..... 35

A. The defendant's degree of culpability typically will be the central factor in the totality inquiry..... 35

B. Courts should determine the degree of a defendant's culpability by focusing on historically important considerations..... 37

C. In certain cases, the defendant's degree of culpability will not determine the totality inquiry..... 42

V. The Federal Circuit's current approach is unsupportable. ..... 43

A. The Federal Circuit has never reconciled a willfulness requirement with the statutory text or historical practice. ..... 44

B. The Federal Circuit has erred in interpreting the standard for willfulness. ..... 45

C. The Federal Circuit's approach severely underdeters culpable infringement. ..... 51

D. Congress has not ratified or acquiesced in the Federal Circuit's approach. ..... 53

VI. This Court should reverse the decision below in relevant part. ..... 55

Conclusion ..... 56

## TABLE OF AUTHORITIES

Page(s)

Cases:

*Activated Sludge* v. *Sanitary Dist. of Chicago*,
64 F. Supp. 25 (N.D. Ill. 1946) ..... 27, 31

*Alexander* v. *Sandoval*,
532 U.S. 275 (2001) ..... 55

*Allen* v. *Blunt*,
1 F. Cas. 450 (C.C.D. Mass. 1846) ..... 30, 32

*Am. Safety Table Co.* v. *Schreiber*,
415 F.2d 373 (2d Cir. 1969) ..... 28, 37

*Amusement Corp. of Am.* v. *Mattson*,
138 F.2d 693 (5th Cir. 1943) ..... 35

*Armstrong* v. *Emerson Radio & Phonograph Corp.*,
132 F. Supp. 176 (S.D.N.Y. 1955) ..... 30

*Armstrong* v. *Emerson Radio & Phonograph Corp.*,
179 F. Supp. 95 (S.D.N.Y. 1959) ..... 29

*Aro Mfg. Co.* v. *Convertible Top Replacement Co.*,
377 U.S. 476 (1964) ..... 34

*Béné* v. *Jeantet*,
129 U.S. 683 (1889) ..... 23

*B.F. Goodrich Co.* v. *Consol. Rubber Tire Co.*,
251 F. 617 (7th Cir. 1918) ..... 39

*Baden Sports, Inc.* v. *Kabushiki Kaisha Molten*,
2007 WL 2790777 (W.D. Wash. Sept. 25, 2007) ..... 40

*Bard Peripheral Vascular, Inc.* v. *W.L. Gore & Assocs., Inc.*,
682 F.3d 1003 (Fed. Cir. 2012) ..... 26

Cases—Continued:

*Beacon Folding Mach. Co.* v. *Rotary Mach. Co.*,
17 F.2d 934 (D. Mass. 1927) ..... 30

*Beatrice Foods Co.* v. *N.E. Printing & Lithographing Co.*,
923 F.2d 1576 (Fed. Cir. 1991) ..... 44

*Bell* v. *McCullough*,
3 F. Cas. 108 (C.C.S.D. Ohio 1858) ..... 43

*Birdsall* v. *Coolidge*,
93 U.S. 64 (1876) ..... 24

*Bragdon* v. *Abbott*,
524 U.S. 624 (1998) ..... 53

*Bredin* v. *Nat'l Metal Weather Strip Co.*,
182 F. 654 (C.C.W.D. Pa. 1910) ..... 31

*Brodie* v. *Ophir Silver Min. Co.*,
4 F. Cas. 202 (C.C.D. Cal. 1867) ..... 28, 32, 38

*Brooks Furniture Mfg., Inc.* v. *Dutailier Int'l, Inc.*,
393 F.3d 1378 (Fed. Cir. 2005) ..... 15

*Brown Bag Filling Mach. Co.* v. *Drohen*,
175 F. 576 (2d Cir. 1910) ..... 29, 32

*Bryan* v. *United States*,
524 U.S. 184 (1998) ..... 45

*Burleigh Rock-Drill Co* v. *Lobdell*,
4 F. Cas. 750 (C.C.D. Mass. 1875) ..... 38

*Carlock* v. *Tappan*,
5 F. Cas. 76 (C.C.S.D.N.Y. 1843) ..... 30

*Carnegie Mellon Univ.* v. *Marvell Tech. Grp., Ltd.*,
2015 WL 4639309 (Fed. Cir. Aug. 4, 2015) ..... 48

*Carter Prods., Inc.* v. *Colgate-Palmolive Co.*,
214 F. Supp. 383 (D. Md. 1963) ..... 32

Cases—Continued:

*Central Bank of Denver, N.A.* v. *First Interstate Bank of Denver, N.A.*,
511 U.S. 164 (1994) ..... 54

*Clark* v. *Schieble Toy & Novelty Co.*,
248 F. 276 (6th Cir. 1917) ..... 39

*Clark* v. *Wooster*,
119 U.S. 322 (1886) ..... 30

*Coleman Co.* v. *Holly Mfg. Co.*,
269 F.2d 660 (9th Cir. 1959) ..... 37

*Commil USA, LLC* v. *Cisco Sys., Inc.*,
135 S. Ct. 1920 (2015) ..... 40

*Consol. Rubber Tire Co.* v. *Diamond Rubber Co.*,
226 F. 455 (S.D.N.Y. 1915) ..... 39

*Cooter & Gell* v. *Hartmax Corp.*,
496 U.S. 384 (1990) ..... 25

*Corning Glass Works* v. *Fed. Glass Co.*,
239 F.2d 674 (6th Cir. 1956) ..... 23

*Creagmile* v. *John Bean Mfg. Co.*,
32 F. Supp. 646 (S.D. Cal. 1940) ..... 29

*Day* v. *Woodworth*,
54 U.S. 363 (1851) ..... 31, 34

*Deere & Co.* v. *Int'l Harvester Co.*,
658 F.2d 1137 (7th Cir. 1981) ..... 42

*Dixie Cup Co.* v. *Paper Container Mfg. Co.*,
169 F.2d 645 (7th Cir. 1948) ..... 34

*Douglas* v. *Cunningham*,
294 U.S. 207 (1935) ..... 22

*Dowling* v. *United States*,
473 U.S. 207 (1985) ..... 34

*eBay Inc.* v. *MercExchange, LLC*,
547 U.S. 388 (2006) ..... 43, 52

Cases—Continued:

*Emerson* v. *Simm*,
8 F. Cas. 640 (C.C.D.N.J. 1873) ..... 38

*Enter. Mfg. Co.* v. *Shakespeare Co.*,
141 F.2d 916 (6th Cir. 1944) ..... 35

*Faragher* v. *City of Boca Raton*,
524 U.S. 775 (1998) ..... 55

*Fogerty* v. *Fantasy, Inc.*,
510 U.S. 517 (1994) ..... 18, 19, 36

*Fox* v. *Knickerbocker Engraving Co.*,
158 F. 422 (C.C.S.D.N.Y. 1908) ..... 28, 33, 38

*Gen. Motors Corp.* v. *Devex Corp.*,
461 U.S. 648 (1983) ..... 5, 19, 20, 28

*Global Traffic Techs. LLC* v. *Morgan*,
2015 WL 3513416 (Fed. Cir. June 4, 2015) ..... 49

*Grant Paper Box Co.* v. *Russell Box Co.*,
106 F. Supp. 616 (D. Mass. 1952) ..... 31, 33

*Guyon* v. *Serrell*,
11 F. Cas. 132 (C.C.S.D.N.Y. 1847) ..... 28, 32, 38

*Halo Electronics, Inc.* v. *Pulse Electronics, Inc.*,
780 F.3d 1357 (Fed. Cir. 2015) ..... 51

*Harris* v. *Emus Records Corp.*,
734 F.2d 1329 (9th Cir. 1984) ..... 23

*Hartford Nat'l Bank & Trust Co.* v. *E.F. Drew & Co.*,
188 F. Supp. 353 (D. Del. 1960) ..... 32

*Highmark Inc.* v. *Allcare Health Mgmt. Sys., Inc.*,
134 S. Ct. 1744 (2014) ..... 10, 17, 24, 25

*iLOR, LLC* v. *Google, Inc.*,
631 F.3d 1372 (Fed. Cir. 2011) ..... 26

Cases—Continued:

*Innovention Toys, LLC* v. *MGA Entm't, Inc.*,
611 Fed. Appx. 693 (Fed. Cir. 2015) ..... 48

*Intra Corp.* v. *Hamar Laser Instruments, Inc.*,
662 F. Supp. 1420 (E.D. Mich. 1987) ..... 38

*Island Software & Computer Serv., Inc.* v.
*Microsoft Corp.*,
413 F.3d 257 (2d Cir. 2005) ..... 22

*Jurgens* v. *CBK, Ltd.*,
80 F.3d 1566 (Fed. Cir. 1996) ..... 45

*King Instrument Corp.* v. *Otari Corp.*,
767 F.2d 853 (Fed. Cir. 1985) ..... 38

*Knorr-Bremse Systeme Fuer Nutzfahrzeuge
GmbH* v. *Dana Corp.*,
383 F.3d 1337 (Fed. Cir. 2004) ..... 33

*Kori Corp.* v. *Wilco Marsh Buggies & Draglines,
Inc.*,
561 F. Supp. 512 (E.D. La. 1982) ..... 43

*Lam, Inc.* v. *Johns-Manville Corp.*,
668 F.2d 462 (10th Cir. 1982) ..... 37, 39, 44

*Laskowitz* v. *Marie Designer, Inc.*,
119 F. Supp. 541 (S.D. Cal. 1954) ..... 33

*Lawrence-Williams Co.* v. *Societe Enfants
Gombault Et Cie*,
52 F.2d 774 (6th Cir. 1931) ..... 41

*Lyon* v. *Donaldson*,
34 F. 789 (C.C.N.D. Ill. 1888) ..... 32, 38

*Martin* v. *Franklin Capital Corp.*,
546 U.S. 132 (2005) ..... 18

*McCormick* v. *Seymour*,
15 F. Cas. 1329 (C.C.N.D.N.Y. 1854) ..... 33

Cases—Continued:

*McLaughlin* v. *Richland Shoe Co.*,
486 U.S. 128 (1988) ..... 33, 36

*Microsoft Corp.* v. *i4i Ltd. P'ship*,
131 S. Ct. 2238 (2011) ..... 50

*Middleton* v. *Wiley*,
195 F.2d 844 (8th Cir. 1952) ..... 35

*Milgo Electronic Corp.* v. *United Bus. Comm'ns*,
623 F.2d 645 (10th Cir. 1980) ..... 37

*Mowry* v. *Whitney*,
81 U.S. 620 (1871) ..... 39

*Nat'l Folding Box & Paper Co.* v. *Elsas*,
81 F. 197 (C.C.S.D.N.Y. 1897) ..... 31

*Nintendo of Am., Inc.* v. *Dragon Pac. Int'l*,
40 F.3d 1007 (9th Cir. 1994) ..... 22

*Octane Fitness, LLC* v. *ICON Health & Fitness*,
134 S. Ct. 1749 (2014) ..... *passim*

*OPTi, Inc.* v. *VIA Techs., Inc.*,
2014 WL 3853429 (E.D. Tex. Aug. 4, 2014) ..... 40

*Orthman Mfg., Inc.* v. *Chromalloy Am. Corp.*,
512 F. Supp. 1284 (C.D. Ill. 1981) ..... 28

*Overman Cushion Tire Co.* v. *Goodyear Tire & Rubber Co.*,
66 F.2d 361 (2d Cir. 1933) ..... 35

*Parker* v. *Corbin*,
18 F. Cas. 1122 (C.C.D. Ohio 1848) ..... 33

*Philadelphia Rubber Works Co.* v. *U.S. Rubber Reclaiming Works*,
276 F. 600 (W.D.N.Y. 1920) ..... 39, 42

*Pierce* v. *Underwood*,
487 U.S. 552 (1988) ..... 17, 24, 25

Cases—Continued:

*Powell* v. *Home Depot U.S.A., Inc.*,
663 F.3d 1221 (Fed. Cir. 2011) ..... 51

*Prof'l Real Estate Investors, Inc.* v. *Columbia Pictures Indus., Inc.*,
508 U.S. 49 (1993) ..... 16

*Providence Rubber Co.* v. *Goodyear*,
76 U.S. 788 (1869) ..... 37

*Radio Corp. of Am.* v. *Radio Eng'g Labs*,
293 U.S. 1 (1934) ..... 50

*Randolph Labs.* v. *Specialties Dev. Corp.*,
213 F.2d 873 (3d Cir. 1954) ..... 35

*Read Corp.* v. *Portec, Inc.*,
970 F.2d 816 (Fed. Cir. 1992) ..... *passim*

*Rite-Hite Corp.* v. *Kelley Co.*,
819 F.2d 1120 (Fed. Cir. 1987) ..... 44

*Russell* v. *Place*,
21 F. Cas. 57 (C.C.N.D.N.Y. 1871) ..... 32

*Safeco Insurance Co. of Am.* v. *Burr*,
551 U.S. 47 (2007) ..... *passim*

*Schwarzel* v. *Holenshade*,
21 F. Cas. 772 (S.D. Ohio 1866) ..... 27, 43

*Seagate Tech., LLC, In re*,
497 F.3d 1360 (Fed. Cir. 2007) ..... *passim*

*Seymour* v. *McCormick*,
57 U.S. 480 (1853) ..... 27, 32, 34

*Smith* v. *Wade*,
461 U.S. 30 (1983) ..... 45

*Southland Sod Farms* v. *Stover Seed Co.*,
108 F.3d 1134 (9th Cir. 1997) ..... 22

*SRI Int'l* v. *Matsushita Elec. Corp. of Am.*,
775 F.2d 1107 (Fed. Cir. 1985) ..... 23

Cases—Continued:

*Stimpson* v. *The Railroads*,
23 F. Cas. 103 (3d Cir. 1847) ..... 33

*Taco Cabana Int'l, Inc.* v. *Two Pesos, Inc.*,
932 F.2d 1113 (5th Cir. 1991) ..... 22

*Teese* v. *Huntingdon*,
64 U.S. 2 (1859) ..... 30

*Texas Pig Stands, Inc.* v. *Hard Rock Cafe Int'l, Inc.*,
951 F.2d 684 (5th Cir. 1992) ..... 22

*Tilghman* v. *Proctor*,
125 U.S. 136 (1888) ..... 27, 31

*Toledo Computing Scale Co.* v. *Moneyweight Scale Co.*,
178 F. 557 (C.C.N.D. Ill. 1910) ..... 39

*Topliff* v. *Topliff*,
145 U.S. 156 (1892) ..... 24, 48

*Trio Process Corp.* v. *L. Goldstein's Sons, Inc.*,
638 F.2d 661 (3d Cir. 1981) ..... 30, 44

*Troy Co.* v. *Prods. Research Co.*,
339 F.2d 364 (9th Cir. 1964) ..... 35

*U.S. Structures, Inc.* v. *J.P. Structures, Inc.*,
130 F.3d 1185 (6th Cir. 1997) ..... 22

*Uniloc USA, Inc.* v. *Microsoft Corp.*,
632 F.3d 1292 (Fed. Cir. 2011) ..... 52

*Union Carbide Corp.* v. *Graver Tank & Mfg. Co.*,
282 F.2d 653 (7th Cir. 1960) ..... 44

*Vortex Mfg. Co.* v. *Ply-Rite Contracting Co.*,
33 F.2d 302 (D. Md. 1929) ..... 38

*Wensel* v. *Gold Hill Hardware Mfg. Co.*,
21 F.2d 974 (S.D. Cal. 1927) ..... 33

Cases—Continued:

*Westchester Media* v. *PRL USA Holdings, Inc.*,
214 F.3d 658 (5th Cir. 2000) ..... 21

*White* v. *Mar-Bel, Inc.*,
369 F. Supp. 1321 (M.D. Fla. 1973) ..... 29

*Wilson* v. *Union Tool Co.*,
275 F. 624 (S.D. Cal. 1921) ..... 31, 32

Constitution and Statutes:

U.S. Const. art. I,
§ 8, cl. 8 ..... 3

15 U.S.C. 1117(a) ..... 21, 22

15 U.S.C. 1125(c) ..... 21

17 U.S.C. 504(c)(1) ..... 21

17 U.S.C. 504(c)(2) ..... 21

28 U.S.C. 1254(1) ..... 1

35 U.S.C.
271(b) ..... 40
281 ..... 3
282(a) ..... 50
283 ..... 5
284 ..... *passim*
285 ..... *passim*
298 ..... 41, 54

Patent Act of 1790,
ch. 7, § 4 ..... 3

Patent Act of 1793,
ch. 11, § 5 ..... 3

Patent Act of 1800,
ch. 24, § 3 ..... 3

Patent Act of 1836,
ch. 357, § 14 ..... 4, 27

Statutes—Continued:

Patent Act of 1870,
ch. 230, §§ 55, 59 ..... 4

Other Authorities:

157 Cong. Rec. S134 (daily ed. Jan. 25, 2011) ..... 54
157 Cong. Rec. S940 (daily ed. Feb. 28, 2011) ..... 54
157 Cong. Rec. S1374 (daily ed. Mar. 8, 2011) ..... 52, 54
5 D. Chisum, Patents § 20.03[4][b][vi] (1991) ..... 37
Thomas F Cotter, *An Economic Analysis of Enhanced Damages and Attorney's Fees for Willful Patent Infringement*,
14 Fed. Cir. Bar J. 291 (2004) ..... 54
H.R. Rep. No. 1923, 82d Cong., 2d Sess. (1952) .... 5, 28
H.R. Rep. No. 98, 112th Cong., 1st Sess. (2011) ..... 41
*Prosser and Keeton on Torts*,
§ 34 (5th ed. 1984) ..... 49
S. 515, 111th Cong. (2010) ..... 54
S. Rep. No. 1503, 79th Cong., 2d Sess. (1946) ..... 53
S. Rep. No. 18, 111th Cong., 1st Sess. (2009) ..... 54
S. Rep. Accompanying Senate Bill No. 239, 24th Cong., 1st Sess. (Apr. 28, 1836) ..... 4

## BRIEF FOR THE PETITIONERS

## OPINIONS BELOW

The amended opinion of the court of appeals (Pet. App. 3a-25a) is reported at 782 F.3d 649. The original opinion of the court of appeals (Pet. App. 26a-48a) is reported at 774 F.3d 1349. The opinion of the district court denying respondents' motions for judgment as a matter of law and granting petitioners' motions for enhanced damages and attorney's fees (Pet. App. 49a-122a) is not reported but is available at 2013 WL 6231533. The opinion of the district court granting petitioners' motion for summary judgment of infringement (Pet. App. 123a-134a) is not reported. The opinion of the district court construing patent claim terms (Pet. App. 135a-173a) is not reported but is available at 2012 WL 333814.

## JURISDICTION

The court of appeals entered its judgment on December 19, 2014. A petition for rehearing was denied on March 23, 2015 (Pet. App. 1a-2a). The petition for a writ of certiorari was filed on June 22, 2015, and granted on October 19, 2015. The jurisdiction of this Court rests on 28 U.S.C. 1254(1).

## STATUTORY PROVISION INVOLVED

Section 284 of Title 35 provides as follows:

> Upon finding for the claimant the court shall award the claimant damages adequate to compensate for the infringement, but in no event less than a reasonable royalty for the use made of the

> invention by the infringer, together with interest and costs as fixed by the court.
>
> When the damages are not found by a jury, the court shall assess them. In either event the court may increase the damages up to three times the amount found or assessed. Increased damages under this paragraph shall not apply to provisional rights under section 154(d).
>
> The court may receive expert testimony as an aid to the determination of damages or of what royalty would be reasonable under the circumstances.

## STATEMENT

This case involves the interpretation of 35 U.S.C. 284, which provides that a district court "may" award "up to three times" the amount of actual damages in cases of adjudicated patent infringement. By its plain text, Section 284 commits broad discretion to district courts to determine whether enhanced damages are warranted in any particular case based on the totality of the circumstances. But in *In re Seagate Technology, LLC*, 497 F.3d 1360 (2007) (en banc) (*Seagate*), the Federal Circuit held that, before a district court may decide whether to enhance damages based on the totality of the circumstances, the court must first find by clear and convincing evidence that (i) the infringer acted despite an objectively high likelihood that its conduct was infringing and (ii) the infringer knew or should have known of the risk. In subsequent cases, the Federal Circuit has held that the test's first prong is reviewed de novo on appeal and is not met if the infringer has asserted a nonfrivolous defense in litigation, regardless of the egregiousness of its pre-suit conduct. Applying its two-part threshold test here,

the Federal Circuit held that the district court could not even consider a discretionary enhancement, although the jury found respondents' infringement was intentional and in bad faith. Pet. App. 21a-25a.

**A. Statutory History**

1. The Patent Clause of the Constitution empowers Congress "[t]o promote the Progress of Science and useful Arts, by securing for limited Times to * * * Inventors the exclusive Right to their * * * Discoveries." U.S. Const. art. I, § 8, cl. 8. Title 35 establishes the statutory framework governing the issuance of patents, and it grants a patentee "remedy by civil action for infringement of his patent." 35 U.S.C. 281. The Act provides that "[u]pon finding for the claimant, the court shall award the claimant damages adequate to compensate for the infringement." 35 U.S.C. 284. The Act also states that a district court "may increase the damages" for infringement "up to three times the amount found or assessed." *Ibid.*

2. a. Congress enacted the first Patent Act in 1790, which, upon a finding of infringement, permitted a patentee to recover "such damages as shall be assessed by a jury." Patent Act of 1790, ch. 7, § 4. Three years later, Congress amended the Patent Act to provide for mandatory enhanced damages: infringers had to pay in damages at least three times the amount the patentee usually received for either selling or licensing the invention. Patent Act of 1793, ch. 11, § 5. Seven years later, Congress again modified the available remedy, requiring infringers to pay "a sum equal to three times the actual damage sustained." Patent Act of 1800, ch. 24, § 3.

The main reason for mandatory trebling at the time was Congress's concern that, because plaintiffs

lacked access to equity to prevent ongoing infringement, actual damages alone were inadequate to compensate patentees and to deter disregard for patent rights. See S. Rep. Accompanying Senate Bill No. 239, 24th Cong., 1st Sess. (Apr. 28, 1836), at 6 (explaining that pre-1836 patent law "offer[ed] an inadequate remedy for the [infringement] injury, by giving an action of damages"); *Seagate*, 497 F.3d at 1378 (Gajarsa, J., concurring).

b. Over time, however, Congress discovered that broad interpretation of the conditions of patentability, in combination with the guarantee of treble damages, risked abuse of the patent system. See Senate Report, *supra*, at 3. In 1836, in addition to tightening the criteria for granting new patents, Congress repealed the mandatory award of treble damages and instead gave district courts the discretion to award up to three times actual damages "according to the circumstances of the case." Patent Act of 1836, ch. 357, § 14. The 1836 Act also authorized injunctive relief "to prevent the violation of the rights of any inventor * * * on such terms and conditions as [the] courts may deem reasonable." *Id.* § 17.

c. When Congress revisited the statute again in 1870, it retained discretionary trebling "according to the circumstances of the case" in actions at law, and empowered courts of equity to award damages. See Patent Act of 1870, ch. 230, §§ 55, 59. Notably, Congress also gave courts of equity "the same powers to increase [damages] *in [their] discretion*" as those possessed by courts of law—in other words, the discretion to enhance damages up to three times the amount assessed based on the circumstances of the case. *Id.* § 55 (emphasis added). Thus, after 1870, a patentee could file suit in either law or equity for an

award of damages subject to discretionary enhancement, but in equity the patentee also could obtain injunctive relief.

d. In light of the merger of law and equity, Congress reorganized the patent laws in the Patent Act of 1952, granting all courts with jurisdiction of patent infringement cases the authority to provide both injunctive and monetary relief. See 35 U.S.C. 283, 284. The new, unified damages provision stated simply—in language that remains in effect today—that a district court "may increase the damages up to three times the amount found or assessed." 35 U.S.C. 284 (1958). As Congress and this Court have explained, the changes to the statutory text that occurred during the 1952 reorganization—including removal of the phrase that district courts should enhance damages "according to the circumstances of the case"—were not substantive. See *Gen. Motors Corp.* v. *Devex Corp.*, 461 U.S. 648, 652 n.6 (1983) (quoting H.R. Rep. No. 1923, 82d Cong., 2d Sess. 10, 29 (1952)).

3. Thus, from the enactment of the discretionary enhancement provision in 1836 through the latter half of the twentieth century, courts determined whether the totality of the circumstances in each particular case justified enhancement of an award. See *infra*, pp. 27-29 (cataloguing cases). Although courts often determined that wrongful or culpable conduct by an infringer warranted an award of enhanced damages, that factor generally was not viewed as a prerequisite to such an award, and courts also awarded enhancements for other purposes, including fully compensating patentees. See *infra*, pp. 30-34.

In the 1990s, however, the Federal Circuit adopted an approach that treated the willfulness of infringement as a strict prerequisite to the district court's

discretionary decision whether to enhance damages. Without a finding of willfulness, there could be no enhancement. In 2007, the en banc Federal Circuit in *Seagate* confirmed its view that willfulness is a prerequisite, and further held that willfulness requires two successive showings by clear and convincing evidence: the infringement was objectively reckless (which the Federal Circuit has subsequently held is reviewed de novo on appeal), and the infringer knew or should have known of the objective risk (which is reviewed for clear error). See 497 F.3d at 1371. Only then may a district court make the enhancement decision based on the totality of circumstances (reviewed for abuse of discretion). A patent holder thus has two hurdles to clear before a court may even consider the appropriateness of enhancement. Since *Seagate*, the Federal Circuit has interpreted objective recklessness ever more narrowly, including by allowing even egregious infringers to escape enhancement if their counsel present nonfrivolous defenses in litigation.

### B. Factual And Procedural History

#### 1. Zimmer's deliberate infringement

Petitioner Stryker Corporation is an industry leader in the medical device field. Over the course of more than five years, a team of Stryker engineers pioneered innovative pulsed lavage devices, which are instruments used by medical professionals to clean bone surfaces during surgery and improve wound visualization. Unlike previous devices, Stryker's "SurgiLav Plus" and its next-generation "InterPulse" are battery-powered, handheld, portable, and disposable. They represent a significant improvement over prior pulsed lavage models, which were bulky and required a centralized power source. The Patent Office award-

ed multiple patents to Stryker on its "pioneering" devices, three of which form the basis for this suit. Pet. App. 50a-51a.

Respondent Zimmer Inc. is Stryker's direct competitor. In response to Stryker's introduction of the innovative SurgiLav Plus, Zimmer introduced its own pulsed lavage device, "Var-A-Pulse." Var-A-Pulse was not commercially successful, and Zimmer would later describe it as a "poorly designed product with little thought given to ergonomics or user needs" that was "rushed to the market and has been dogged by reliability and functionality issues since its release." J.A. 282. Var-A-Pulse's "poor performance and product quality issues" prompted Zimmer's concerns that it would be "eliminate[d]" as "a player in the lavage market in the future." J.A. 282, 294.

Zimmer eventually brought to market the "Pulsavac Plus" line of products, which were simply copied from Stryker's patented products. As the district court explained, "[r]ather than relying on their own engineers to develop an alternative, Zimmer hired an independent contractor with no experience in pulsed lavage devices. In essence, Zimmer handed the independent contractor a copy of Stryker's product and said, 'Make one for us.'" Pet. App. 51a. Notwithstanding its decision to copy the Stryker device, Zimmer did not seek outside advice either to assess the potential for infringement or to evaluate the validity of Stryker's patents. Once Zimmer introduced its Pulsavac Plus products, there was "fierce, direct market competition between Stryker and Zimmer" and "Zimmer constantly sought to lure customers away from Stryker and had a fair amount of success in doing so with its new product." *Ibid.* Zimmer, however, encountered severe quality issues with its Pulsavac

Plus products. Zimmer ultimately pulled the products from the market in 2007, and did not restart production until December 2008. *Id.* at 51a-52a.

**2. Proceedings before the District Court**

In late 2010, shortly after Zimmer had reentered the market, Stryker filed suit and alleged infringement of three patents, U.S. Patent Nos. 6,022,329 ("the '329 patent"), 6,179,807 ("the '807 patent"), and 7,144,383 ("the '383 patent"). In November 2012, the district court granted Stryker's motion for summary judgment of infringement with respect to all twenty asserted claims of the '807 and '383 patents and all but one claim element of the '329 patent. See Pet. App. 123a-134a. Even after that ruling of infringement, Zimmer continued to sell the infringing products; it made no effort to cease its infringement or mitigate damages. *Id.* at 118a.

The case proceeded to trial on the remaining issues. After a two-week trial, the jury returned a verdict "unequivocally in Stryker's favor." Pet. App. 50a. The jury found that (i) Zimmer's Pulsavac Plus products infringed the remaining claim of Stryker's '329 patent; (ii) Zimmer had failed to establish any of its 22 invalidity contentions; (iii) Zimmer's infringement was willful; and (iv) Stryker was entitled to $70 million in lost profits. *Ibid.* After the jury returned its verdict, both parties filed motions. As relevant here, Zimmer moved for judgment as a matter of law that its infringement was not willful. *Id.* at 73a. Stryker moved for enhanced damages and attorney's fees pursuant to 35 U.S.C. 284 and 285. *Id.* at 108a, 116a.

In denying Zimmer's motion, the district court applied *Seagate*'s two-part test for willfulness. With respect to the first prong of objective recklessness, the

court concluded "there was an objectively high likelihood that Zimmer's actions constituted infringement of Stryker's valid patents," because among other things "it was far from likely * * * that the jury could have accepted one or more of Zimmer's defenses." Pet. App. 77a-78a. With respect to the second prong of subjective bad faith, the court concluded that the jury had "ample justification" for finding Zimmer knew of the likelihood of infringement, in large part because Zimmer had copied Stryker's patented products. *Id.* at 79a. In the court's view, "Zimmer chose a high-risk/high-reward strategy of competing immediately and aggressively in the pulsed lavage market and opted to worry about the potential legal consequences later." *Id.* at 52a.

Having found that Zimmer's infringement was willful under the two-part *Seagate* test, the district court proceeded to analyze whether it should exercise its discretion under Section 284 to enhance the jury's damages award. The court considered the totality of the circumstances, informed by its careful examination of hundreds of trial exhibits, credibility assessments of more than a dozen trial witnesses, and experience presiding over the case for three years. Pet. App. 116a-120a. The court observed that "this was not a close case," noting that "[e]very major decision—from claim construction through post-verdict motions—went against Zimmer." *Id.* at 118a. In addition to reiterating that Zimmer had "deliberately copied Stryker's patented inventions," the court noted that Zimmer had continued to infringe throughout the course of the litigation—including after the court's summary judgment rulings and the jury's infringement verdict. *Id.* at 117a-118a. Indeed, Zimmer had even "attempt[ed] to prevent Stryker from discover-

ing certain aspects of its infringement in the run up to trial." *Id.* at 119a. The court therefore applied Section 284 and trebled the jury's damages award. *Ibid.*

### 3. Proceedings before the Federal Circuit

On appeal, the Federal Circuit affirmed that Zimmer was liable for infringing Stryker's patents, but vacated the awards of enhanced damages and attorney's fees on the ground that Zimmer's infringement was not willful. Pet. App. 36a, 39a, 40a, 43a, 44a-47a. Reviewing de novo the district court's determination of objective recklessness, the Federal Circuit held that Zimmer's defenses to infringement—two predicated on claim construction and one on obviousness—were not meritorious but were not objectively unreasonable. *Id.* at 46a-47a. The Federal Circuit reached that conclusion in part by relying on defenses to willfulness that Zimmer had presented for the first time on appeal. Compare *id.* at 21a-24a, with *id.* at 73a-79a. Because the Federal Circuit held that Zimmer's infringement was not objectively reckless, it vacated the district court's enhanced damages and attorney's fees awards. *Id.* at 25a.

The Federal Circuit subsequently denied Stryker's request for rehearing en banc to reevaluate the appropriate standard for granting enhanced damages in light of this Court's decisions in *Octane Fitness, LLC* v. *ICON Health & Fitness*, 134 S. Ct. 1749 (2014), and *Highmark Inc.* v. *Allcare Health Management System, Inc.*, 134 S. Ct. 1744 (2014). Pet. App. 1a-2a.

## SUMMARY OF ARGUMENT

I. In its recent decisions in *Octane* and *Highmark*, this Court rejected the Federal Circuit's rigid approach to attorney's fees under 35 U.S.C. 285, in light of that provision's flexible, discretionary lan-

guage. The Federal Circuit's former test required a party seeking fees to prove by clear and convincing evidence that the litigation was both objectively baseless and conducted in bad faith. Moreover, the Federal Circuit reviewed the first of those requirements—objective baselessness—de novo. In *Octane* and *Highmark*, this Court held that district courts deciding whether to award attorney's fees under Section 285 should consider the totality of the circumstances, based on a preponderance of the evidence, subject to review for abuse of discretion.

II. The Federal Circuit has adopted an equally rigid and largely identical approach to damages enhancements under 35 U.S.C. 284, even though the language of Section 284 is more flexible than that of Section 285. Under the Federal Circuit's test, before a district court may consider whether to grant an enhancement, a patentee must prove by clear and convincing evidence both that the defendant's infringement was objectively reckless (which is reviewed de novo) and that the infringer acted in subjective bad faith (which is reviewed for clear error). That approach has no basis in Section 284's text, which does not contain any prerequisite and instead grants discretion to district courts to conduct a single, totality-of-the-circumstances inquiry. Because nothing in the text or history suggests otherwise, the standard civil burden of proof governs. And, because the requisite analysis is discretionary, a district court's determination whether to award enhanced damages should be reviewed for abuse of discretion.

III. From the enactment of the discretionary enhancement provision through the latter half of the twentieth century, district courts generally conducted a single totality inquiry, in which they considered a

wide range of circumstances and enhanced damages when warranted to serve goals of compensation, deterrence, or punishment. Appellate courts reviewed such decisions for abuse of discretion. Even when district courts invoked Section 284 to punish or deter the infringing defendant, they used the term "willful" to refer to a heightened degree of culpability greater than negligence. Such heightened culpability was treated as a sufficient condition for enhancing damages, but not as a necessary one. Willfulness and the enhancement analysis thus looked quite different as a historical matter from the Federal Circuit's dual threshold requirements of objective recklessness and subjective bad faith.

IV. Overruling the Federal Circuit's current approach and returning appropriate discretion to the district courts should not open the floodgates to enhanced damages awards. Rather, courts should resume considering the factors that traditionally guided their exercise of discretion. In the mine-run of cases, courts will be asked to use Section 284 in order to punish or deter culpable conduct. They should assess the degree of a defendant's culpability by considering, *inter alia*, whether the defendant deliberately copied the patented invention; whether the defendant continued to infringe after actual or constructive notice of the patent; whether the defendant reasonably investigated the possibility of infringement; and whether the question of liability was close or clear-cut based on what the defendant knew at the time. Although the defendant's degree of culpability typically will be central to the totality inquiry, courts still must weigh evidence of culpability alongside other factors to determine whether and to what extent an enhancement is warranted.

V. Even if willfulness were a prerequisite to enhanced damages (despite Section 284's text and history), willfulness should itself be based on a totality of the circumstances—as it was before the Federal Circuit adopted its rigid, two-part *Seagate* test. The Federal Circuit wrongly imported that test from this Court's decision in *Safeco Insurance Co. of America* v. *Burr*, 551 U.S. 47 (2007). The Federal Circuit has only made matters worse since *Seagate*. It has held that the test's first prong—objective recklessness—is reviewed de novo on appeal. It has further held that this prong cannot be satisfied if the infringer advances minimally plausible defenses in litigation, even if those defenses were unknown to the infringer prior to litigation. The net effect is that even the most egregious infringers can escape enhancement by employing clever counsel to devise nonfrivolous defenses at any point in litigation, even on appeal. Parties are thus encouraged to infringe and take their chances in court, rather than to develop an alternative design or resolve disputes through consensual licensing.

VI. This Court should reverse the Federal Circuit's vacatur of enhanced damages. After finding objective recklessness and subjective bad faith, the district court considered the totality of the circumstances (including Zimmer's egregious conduct), trebled the jury's damages award, and granted attorney's fees. In light of the adjudicated facts, the district court did not remotely abuse its discretion, and therefore this Court should reinstate its awards of enhanced damages and attorney's fees. At a minimum, however, the Court should remand the case to the Federal Circuit for that court to determine whether the district court abused its discretion in enhancing damages and awarding fees.

## ARGUMENT

The Patent Act provides that, in cases of patent infringement, district courts "may increase the damages up to three times the amount found or assessed." 35 U.S.C. 284. Under that flexible grant of discretion to district courts, they should consider the totality of the circumstances, based on a preponderance of the evidence, subject to review for abuse of discretion. This Court so held in *Octane* and *Highmark* in a closely related context, and there is no reason for an inconsistent result here. Enhanced damages should not be available in run-of-the-mill cases, but courts traditionally treated Section 284 as a single totality inquiry subject to deferential review without making enhanced damages routine.

By contrast, the Federal Circuit's modern procedure requires objective recklessness by clear and convincing evidence (reviewed de novo), then subjective bad faith by clear and convincing evidence (reviewed for clear error), and finally the enhancement decision itself by a preponderance standard (reviewed for abuse of discretion). There is no basis—in text, history, purpose, or anything else—for that convoluted approach. Moreover, the modern standard severely underdeters bad-faith infringement, as this case shows. According to the Federal Circuit, the district court here was precluded from even considering whether to grant a discretionary enhancement, despite the fact that the jury found Zimmer's infringement to be intentional and in bad faith.

## I. *OCTANE* AND *HIGHMARK* INTERPRETED SIMILAR LANGUAGE IN A RELATED CONTEXT TO REQUIRE A TOTALITY INQUIRY SUBJECT TO DEFERENTIAL REVIEW.

In *Octane* and *Highmark*, this Court addressed a related patent provision, 35 U.S.C. 285, which states that "[t]he court in exceptional cases may award reasonable attorney fees to the prevailing party." In *Brooks Furniture Manufacturing, Inc.* v. *Dutailier International, Inc.*, 393 F.3d 1378 (2005), the Federal Circuit had imposed a rigid, two-part test on Section 285's flexible statutory text, requiring a movant to demonstrate that a case was exceptional by offering clear and convincing evidence that the litigation was both objectively baseless and brought in bad faith. Moreover, the Federal Circuit reviewed the first of those requirements—objective baselessness—de novo on appeal. In *Octane* and *Highmark*, this Court unanimously rejected the *Brooks Furniture* standard.

1. In *Octane*, this Court began with the text of Section 285, which "imposes one and only one constraint on district courts' discretion to award attorney's fees in patent litigation: The power is reserved for 'exceptional' cases." 134 S. Ct. at 1755-1756. The Court explained that, in assessing whether a case is exceptional (based on the parties' litigation positions and conduct), district courts must engage "in the case-by-case exercise of their discretion, considering the totality of the circumstances." *Id.* at 1756. "[T]here is no precise rule or formula for making these determinations," the Court observed, "but instead equitable discretion should be exercised" in light of the relevant considerations. *Ibid.* (internal quotation marks omitted).

The Court criticized the Federal Circuit's two-part test of objective baselessness and subjective bad faith as "unduly rigid": "[I]t impermissibly encumbers the statutory grant of discretion to district courts." *Octane*, 134 S. Ct. at 1755. The Court reasoned that "a case presenting *either* subjective bad faith *or* exceptionally meritless claims may sufficiently set itself apart from mine-run cases to warrant a fee award." *Id.* at 1757 (emphasis added). By strictly requiring both showings, the Federal Circuit's "formulation superimposes an inflexible framework onto statutory text that is inherently flexible." *Id.* at 1756.

The Court noted that the Federal Circuit had imported the dual-pronged test from *Professional Real Estate Investors, Inc.* v. *Columbia Pictures Industries, Inc.*, 508 U.S. 49 (1993) (*PRE*), which involved an exception to the *Noerr-Pennington* doctrine of antitrust law. See *Octane*, 134 S. Ct. at 1757-1758. The Court stressed that "the *PRE* standard finds no roots in the text of [Section] 285, and it makes little sense in the context of determining whether a case is so 'exceptional' as to justify an award of attorney's fees in patent litigation." *Id.* at 1757.

2. The Court also rejected the Federal Circuit's requirement in *Brooks Furniture* that patent litigants demonstrate their entitlement to fees under Section 285 by clear and convincing evidence. *Octane*, 134 S. Ct. at 1758. According to the Court, "Section 285 demands a simple discretionary inquiry; it imposes no specific evidentiary burden, much less such a high one." *Ibid.* In the absence of any contrary textual indication, the Court noted, "patent-infringement litigation has always been governed by a preponderance of the evidence standard." *Ibid.* Moreover, "that is the standard generally applicable in civil actions, because

it allows both parties to share the risk of error in roughly equal fashion." *Ibid.* (internal quotation marks omitted).

3. Finally, in *Highmark*, this Court held that the Federal Circuit had to review "*all* aspects of a district court's [fee] determination for abuse of discretion." 134 S. Ct. at 1747 (emphasis added). The Court explained that *Octane* settled the standard of review: "Because [Section] 285 commits [fee awards] to the discretion of the district court, that decision is to be reviewed on appeal for abuse of discretion." *Id.* at 1748. In addition to the fact that Section 285's text "suggests some deference to the district court upon appeal," the district court "is better positioned" to decide whether a fee award is warranted "because it lives with the case over a prolonged period of time" and is "likely to profit from the experience that an abuse-of-discretion rule will permit to develop." *Id.* at 1748-1749 (quoting *Pierce* v. *Underwood*, 487 U.S. 552, 559-560, 562 (1988)).

## II. AS IN *OCTANE* AND *HIGHMARK*, DISTRICT COURTS APPLYING SECTION 284 SHOULD CONSIDER THE TOTALITY OF THE CIRCUMSTANCES, BASED ON A PREPONDERANCE OF THE EVIDENCE, SUBJECT TO REVIEW FOR ABUSE OF DISCRETION.

The analysis here is even more straightforward than in *Octane* and *Highmark*. Without imposing any threshold determination, Section 284 grants discretion over enhanced damages to district courts, resulting in a flexible, totality-of-the-circumstances inquiry. Because nothing in the text suggests otherwise, the standard civil burden of proof governs. And, because the requisite analysis is discretionary, a district

court's determination whether to award enhanced damages should be reviewed for abuse of discretion.

### A. Section 284 Gives District Courts The Discretion To Consider The Totality Of The Circumstances.

1. On its face, Section 284 is a broad grant of discretion to district courts. It states simply that, upon a finding of infringement, the district court "may" increase damages "up to three times the amount found or assessed." 35 U.S.C. 284. As this Court has observed, "the word 'may' clearly connotes discretion." *Martin* v. *Franklin Capital Corp.*, 546 U.S. 132, 136 (2005) (quoting *Fogerty* v. *Fantasy, Inc.*, 510 U.S. 517, 533 (1994)). By its terms, Section 284 does not set forth any specific condition that must be satisfied before courts may award enhanced damages; it does not constrain the factors courts may consider in deciding whether to award such damages; and it does not prescribe rigid rules governing how particular factors are to be weighed or what the amount of the enhancement should be (except by setting a cap of treble damages). In short, Section 284 allows district courts to enhance damages "in the case-by-case exercise of their discretion, considering the totality of the circumstances." *Octane*, 134 S. Ct. at 1756.

Indeed, the text of Section 284 confers even broader discretion on district courts than Section 285, which limits fee awards to "exceptional cases." 35 U.S.C. 285. By contrast, Section 284's text does not impose any "constraint[s] on district courts' discretion to award [enhanced damages] in patent litigation." *Octane*, 134 S. Ct. at 1755. Of course, as explained below, there are practical limits on district courts' exercise of their discretion, because courts his-

torically have determined whether enhanced damages are warranted by considering factors that are not routinely satisfied in every case. But as a textual matter, Section 284 is a "statutory grant of discretion to district courts" that is "inherently flexible," *Octane*, 134 S. Ct. at 1756, and thus "[t]here is no precise rule or formula for making these determinations," *ibid.* (quoting *Fogerty*, 510 U.S. at 534).

The Federal Circuit's error here is even worse than the one that this Court corrected in *Octane*. At least in the context of fee awards, the Federal Circuit had adopted a rigid, two-part test—objective baselessness and subjective bad faith—for a phrase that actually appears in Section 285 ("exceptional cases"). Here, the Federal Circuit has adopted an equally rigid and nearly identical two-part test—objective recklessness and subjective bad faith—for a term ("willfulness") that nowhere appears in Section 284. In other words, the Federal Circuit has engrafted a willfulness requirement onto the statute, and then "superimpose[d] an inflexible framework" onto that atextual requirement. *Octane*, 134 S. Ct. at 1756. The net effect is that, just as in *Octane*, the Federal Circuit has "impermissibly encumber[ed] the statutory grant of discretion to district courts." *Id.* at 1755.

2. The Court previously has criticized precisely that type of atextual approach to Section 284. In *General Motors Corp.* v. *Devex Corp.*, 461 U.S. 648 (1983), the Court construed Section 284's prejudgment interest clause, which states that "[u]pon finding for the claimant the court shall award the claimant damages adequate to compensate for the infringement * * * together with interest and costs as fixed by the court." 35 U.S.C. 284. "[A]s a matter of federal common law," however, interest on unliquidated

damages could be awarded only in cases of "bad faith or other exceptional circumstances." *Gen. Motors*, 461 U.S. at 653. General Motors Corporation, which had been held liable for infringement and ordered to pay prejudgment interest, contended that Section 284 should be read to contain that same common-law limitation.

This Court squarely rejected that argument. It reasoned that "[Section] 284 gives a court general authority to fix interest and costs." *Gen. Motors*, 461 U.S. at 653. "On the face of [Section] 284, a court's authority to award interest is not restricted to exceptional circumstances, and there is no warrant for imposing such a limitation." *Ibid.* Here, exactly the same can be said of Section 284's enhanced-damages provision. That provision gives district courts the general authority to enhance damages for infringement, without restricting courts' authority to cases in which patentees demonstrate both objective recklessness and subjective bad faith by clear and convincing evidence. Simply put, the Federal Circuit's strict willfulness prerequisite is flatly inconsistent with both *Octane* and *General Motors*.

3. In *Octane*, the Court noted that it had adopted a totality-of-the-circumstances inquiry for fee awards "in the comparable context of the Copyright Act." 134 S. Ct. at 1756. Here, adopting a totality inquiry without willfulness as a prerequisite would be consistent with the text and judicial treatment of other intellectual property statutes.

a. The Copyright Act and the Lanham Act—unlike the Patent Act—contain express willfulness requirements for certain kinds of remedies. Under the Copyright Act, a copyright owner may elect to recover, in lieu of actual damages, statutory damages

"of not less than $750 or more than $30,000 as the court considers just." 17 U.S.C. 504(c)(1). But the district court "in its discretion may increase the award of statutory damages to a sum of not more than $150,000" if it finds "that infringement was committed *willfully*." 17 U.S.C. § 504(c)(2) (emphasis added). The Copyright Act thus requires that district courts find willful infringement before enhancing statutory damages.

Similarly, the Lanham Act includes a willfulness requirement for certain types of relief. See 15 U.S.C. 1117(a), 1125(c) (trademark dilution cases); *Westchester Media* v. *PRL USA Holdings, Inc.*, 214 F.3d 658, 670 (5th Cir. 2000) ("Injunctive relief may be ordered for a violation, but if a willful violation is proved, the remedy may include restitutionary, compensatory, or specific relief in the form of destruction of offending articles."). If Congress had wished to impose a similar limitation on district courts' discretion with respect to damages enhancements in patent cases, it could and would have said so. See, *e.g.*, *Gen. Motors*, 461 U.S. at 653 ("When Congress wished to limit an element of recovery in a patent infringement action, it said so explicitly.").

b. The Lanham Act, however, does not require willfulness for the enhancement of ordinary damages. Rather, it provides that district courts in trademark actions "may enter judgment, according to the circumstances of the case, for any sum above the amount found as actual damages, not exceeding three times such amount." 15 U.S.C. 1117(a).[1] The courts of ap-

---

[1] Section 1117(a) provides that any enhancement "shall constitute compensation and not a penalty," whereas Section 284 serves compensatory, deterrent, and punitive purposes. See *infra*, pp.

peals have interpreted Section 1117(a) as a broad grant of discretion to district courts.[2] Indeed, several courts of appeals have been explicit that district courts should conduct a totality inquiry in making awards pursuant to Section 1117(a).[3] There is no reason to adopt—as the Federal Circuit has—a different approach in determining whether to enhance damages for patent infringement.

Similarly in the copyright context, when a district court decides what statutory damages are "just," it has "wide discretion" within the applicable range. *Island Software & Computer Serv., Inc.* v. *Microsoft Corp.*, 413 F.3d 257, 265 (2d Cir. 2005); *Nintendo of Am., Inc.* v. *Dragon Pac. Int'l*, 40 F.3d 1007, 1010 (9th Cir. 1994) (same). And in light of the discretionary nature of statutory damages awards, appellate courts review them with deference. See *Douglas* v. *Cun-*

---

30-31. But whatever the particular purpose for which those statutes are invoked, district courts should consider the totality of the circumstances relevant to that purpose.

[2] *See, e.g.*, *U.S. Structures, Inc.* v. *J.P. Structures, Inc.*, 130 F.3d 1185, 1191 (6th Cir. 1997) ("Section 1117(a) grants a district court a great deal of discretion in fashioning an appropriate remedy in cases of trademark infringement."); *Taco Cabana Int'l, Inc.* v. *Two Pesos, Inc.*, 932 F.2d 1113, 1127 (5th Cir. 1991) (Section 1117(a) "endows the district court with considerable discretion in fashioning an appropriate remedy for infringement."), *aff'd sub nom.*, *Two Pesos, Inc.* v. *Taco Cabana, Inc.*, 505 U.S. 763 (1992).

[3] *See, e.g.*, *Southland Sod Farms* v. *Stover Seed Co.*, 108 F.3d 1134, 1146 (9th Cir. 1997) ("[T]he preferred approach" to Section 1117(a) "allows the district court in its discretion to fashion relief, including monetary relief, based on the totality of the circumstances."); *Texas Pig Stands, Inc.* v. *Hard Rock Cafe Int'l, Inc.*, 951 F.2d 684, 694-695 (5th Cir. 1992) (evaluating a damages award under Section 1117(a) based on "the totality of the circumstances").

*ningham*, 294 U.S. 207, 210 (1935); *Harris* v. *Emus Records Corp.*, 734 F.2d 1329, 1335 (9th Cir. 1984). Determining whether to increase statutory damages for copyright infringement above the $750 minimum (up to the $30,000 cap) is not importantly different from determining whether to increase damages for patent infringement above the amount of actual damages (up to the treble damages cap). Either requires "the case-by-case exercise" of a district court's "discretion, considering the totality of the circumstances." *Octane*, 134 S. Ct. at 1756. Just as the former is a totality inquiry subject to deferential review, so should be the latter.

### B. Section 284 Leaves In Place The Usual Preponderance-Of-The-Evidence Standard.

The Federal Circuit's requirement that patentees prove willfulness by clear and convincing evidence also is inconsistent with *Octane*. See *Seagate*, 497 F.3d at 1371. By its plain text, Section 284 "demands a simple discretionary inquiry; it imposes no specific evidentiary burden, much less such a high one." *Octane*, 134 S. Ct. at 1758. Moreover, as the Court explained in *Octane*, "patent-infringement litigation has always been governed by a preponderance of the evidence standard." 134 S. Ct. at 1758 (citing *Béné* v. *Jeantet*, 129 U.S. 683, 688 (1889)); see *SRI Int'l* v. *Matsushita Elec. Corp. of Am.*, 775 F.2d 1107, 1123 (Fed. Cir. 1985); *Corning Glass Works* v. *Fed. Glass Co.*, 239 F.2d 674, 675 (6th Cir. 1956). That is the "standard generally applicable in civil actions, because it allows both parties to share the risk of error in roughly equal fashion." *Octane*, 134 S. Ct. at 1758 (internal quotation marks omitted). Here, Congress

did not demonstrate any intent to vary the general preponderance standard.

### C. Section 284 Requires That District Courts' Discretionary Enhancements Be Reviewed For Abuse Of Discretion.

Because Section 284 commits damages enhancements to the discretion of district courts, it follows under *Highmark* that all aspects of their decisions—regardless of whether willfulness is treated as a prerequisite—are to be reviewed on appeal for abuse of that discretion. See 134 S. Ct. at 1748-1749. Indeed, this Court has said as much. In addressing Section 284's predecessor provisions, the Court recognized that "the power[] to increase the decree" of damages in patent infringement cases resides "in [the] discretion" of the district court. *Birdsall* v. *Coolidge*, 93 U.S. 64, 69-70 (1876); see *Topliff* v. *Topliff*, 145 U.S. 156, 174 (1892). The Federal Circuit has never reconciled its de novo review of objective recklessness with this Court's decisions in *Birdsall* and *Topliff*.

In the decision below, the Federal Circuit also did not address *Highmark*'s reasons for an abuse-of-discretion standard. First, Section 284's grant of discretion "suggests some deference to the district court upon appeal." 134 S. Ct. at 1748 (quoting *Pierce*, 487 U.S. at 559). Second, the decision whether to award enhanced damages rests on a host of factual and equitable considerations, such as whether the defendant deliberately copied the patent or engaged in other culpable conduct that ignored the patentee's intangible property rights. Because district courts "live[] with" cases "over a prolonged period of time," they are "better positioned" than appellate courts to make these sorts of "multifarious and novel" judg-

ments. *Id.* at 1748-1749 (quoting *Pierce*, 487 U.S. at 559-560, 562). Enhancement decisions are "not susceptible to 'useful generalization' of the sort that de novo review provides," but instead are "likely to profit from the experience that an abuse-of-discretion rule will permit to develop." *Ibid.* (quoting *Pierce*, 487 U.S. at 562).[4]

This case demonstrates why a district court is better positioned to evaluate an infringing defendant's conduct. Here, the district court lived with this case for three years and had a firsthand opportunity to assess witnesses' credibility, trial evidence, and the defendant's conduct throughout the litigation. During that time, as the court observed, Zimmer lost "every argument it advanced at claim construction" and "most of the disputed claims on summary judgment." Pet. App. 52a. Nevertheless, Zimmer "had not changed its product design" by the time of the jury's verdict. *Ibid.* Zimmer's brazenness, the court noted, was "consistent with both [its] market and litigation strategy * * * of competing immediately and aggressively * * * and opt[ing] to worry about the potential legal consequences later." *Ibid.* The court concluded that "Zimmer's able counsel [had] offered the most plausible defenses that were available to them given Zimmer's pre-litigation market conduct. Ultimately, however, the trial proofs demonstrated

---

[4] The abuse-of-discretion standard, of course, "does not preclude an appellate court's correction of a district court's legal or factual error: 'A district court would necessarily abuse its discretion if it based its ruling on an erroneous view of the law or on a clearly erroneous assessment of the evidence.'" *Highmark*, 134 S. Ct. at 1748 n.2 (quoting *Cooter & Gell* v. *Hartmarx Corp.*, 496 U.S. 384, 405 (1990)).

that this was not a close case." *Id.* at 52a-53a. The court observed that the facts and circumstances "overwhelmingly favor[ed] enhancement" and that "given the one-sidedness of the case and the flagrancy and scope of Zimmer's infringement," treble damages were appropriate. *Id.* at 117a-119a.

Finally, it is worth noting that *Highmark* does not simply invalidate the Federal Circuit's use of de novo review as a matter of logic. The Federal Circuit itself has described the objective-recklessness prong of *Seagate* as "identical" to the objective-baselessness prong of *Brooks Furniture*. *iLOR, LLC* v. *Google, Inc.*, 631 F.3d 1372, 1377 (Fed. Cir. 2011). Indeed, in holding that *Seagate*'s objective-recklessness prong should be reviewed de novo, the Federal Circuit expressly relied on this Court's decision in *PRE*, just as *Brooks Furniture* had. See *Bard Peripheral Vascular, Inc.* v. *W.L. Gore & Associates, Inc.*, 682 F.3d 1003, 1007 (Fed. Cir. 2012). By rejecting *Brooks Furniture* and its importation of *PRE* into Section 285—and thus holding that *all* aspects of a district court's determination should be reviewed for abuse of discretion—this Court swept away whatever precedential support may have existed for the Federal Circuit's de novo standard of review.

## III. THE HISTORY OF SECTION 284 IN CONGRESS AND THE COURTS SUPPORTS A TOTALITY INQUIRY REVIEWED FOR ABUSE OF DISCRETION.

Section 284 was long understood by Congress and the courts to require a flexible, totality-of-the-circumstances inquiry subject to review for abuse of discretion. Willfulness was an important factor in

that totality inquiry, but generally was not treated as a prerequisite.

### A. District Courts Traditionally Conducted A Unified Inquiry That Considered The Totality Of The Circumstances.

1. From the very beginning, when Congress replaced mandatory trebling of damages with discretionary enhancement in 1836, it authorized district courts to enhance damages "according to the circumstances of the case." Patent Act of 1836, ch. 357, § 14. Indeed, Congress opted for a system of discretionary enhancement precisely because "[e]xperience had shown the very great injustice of a horizontal rule equally affecting all cases, without regard to their peculiar merits." *Seymour* v. *McCormick*, 57 U.S. 480, 488 (1853). Thus, as a matter of both statutory text and experience, district courts correctly understood their task as evaluating the circumstances of each particular case in deciding whether to enhance damages.

Consistent with that understanding, this Court and others uniformly recognized throughout the 1800s and early to mid-1900s that enhancement decisions required a totality inquiry. See *Tilghman* v. *Proctor*, 125 U.S. 136, 143-144 (1888) ("[T]he court may, whenever the circumstances of the case appear to require it, inflict vindictive or punitive damages, by rendering judgment for not more than thrice the amount of the verdict."); *Schwarzel* v. *Holenshade*, 21 F. Cas. 772, 773 (S.D. Ohio 1866) ("The question for the decision of the court is, therefore, whether the circumstances of this case require the court, in the exercise of a sound discretion, to treble the damages assessed by the jury."); see also *Activated Sludge* v. *Sanitary Dist. of*

*Chicago*, 64 F. Supp. 25, 34-35 (N.D. Ill. 1946); *Fox* v. *Knickerbocker Engraving Co.*, 158 F. 422, 428-429 (C.C.S.D.N.Y. 1908); *Brodie* v. *Ophir Silver Min. Co.*, 4 F. Cas. 202, 203-204 (C.C.D. Cal. 1867); *Guyon* v. *Serrell*, 11 F. Cas. 132, 133 (C.C.S.D.N.Y. 1847).

2. In 1952, Congress reorganized the patent laws to account for the merger of law and equity. In its new, unified damages provision, Congress stated simply that a district court "may increase the damages up to three times the amount found or assessed," 35 U.S.C. 284 (1958), without requiring that the court do so according to the circumstances of the case. But as this Court has recognized, Section 284 only "consolidated" the separate damages provisions for law and equity, and "[t]he stated purpose of the codification was merely 'reorganization in language to clarify the statement of the statutes.'" *Gen. Motors*, 461 U.S. at 652 n.6 (quoting H.R. Rep. No. 1923, 82d Cong., 2d Sess. 10, 29 (1952)). Congress's changes were not meant to be substantive, and the new Section 284 contained no language limiting a district court's discretion to weigh the circumstances of each case.

District courts therefore correctly continued to engage in a totality-of-the-circumstances inquiry in assessing enhanced damages. See, *e.g.*, *Am. Safety Table Co.* v. *Schreiber*, 415 F.2d 373, 379 n.11 (2d Cir. 1969) (after "considering the totality of circumstances," court increased damages by 25 percent for infringement not "executed with the ultimate in willfulness" but "with deliberation and abandon"); *Orthman Mfg., Inc.* v. *Chromalloy Am. Corp.*, 512 F. Supp. 1284, 1295 (C.D. Ill. 1981) ("The measure of damages which is appropriate in a particular case should be determined with reference to all relevant circumstances shown to affect the litigation."); *White* v. *Mar-Bel*,

*Inc.*, 369 F. Supp. 1321, 1326 (M.D. Fla. 1973) (considering "all of the circumstances of this case" and noting that "trebling of damages in patent cases is always entrusted to the discretion of the Court").

3. Significantly, although courts from the 1830s through the mid-1900s routinely conducted a totality inquiry, enhancing damages was not routine by any means. Congress's shift from mandatory to discretionary enhancement meant that increased damages should not be automatic, and accordingly courts exercised their discretion to enhance damages only when necessary to serve the purposes of the statute. See *Armstrong* v. *Emerson Radio & Phonograph Corp.*, 179 F. Supp. 95, 129 (S.D.N.Y. 1959) (treble damages are not awarded in run-of-the-mill cases); see also *Brown Bag Filling Mach. Co.* v. *Drohen*, 175 F. 576, 577 (2d Cir. 1910) (no enhancement for infringement that exhibited only "the usual conditions obtaining in patent causes"); *Creagmile* v. *John Bean Mfg. Co.*, 32 F. Supp. 646, 648-649 (S.D. Cal. 1940) (no enhancement where defendants' "attempt[s] to nullify, avoid and get around the lawful claims of an invention" were "no more * * * than any other ordinary infringer does after notice of the invasion of patent rights").

### B. District Courts Generally Did Not Treat Willfulness As A Prerequisite For Enhanced Damages.

In addition to the fact that the text of the early Patent Acts did not permit courts to treat willfulness as a requirement for enhanced damages, it would not have made sense to do so. District courts increased damages to serve various statutory purposes, which necessitated consideration of a wide range of circumstances beyond the wrongfulness of a defendant's in-

fringement. A defendant's heightened culpability was treated as a sufficient condition for enhancing damages, but not as a necessary one.

1. From 1836 forward, discretionary enhancement was understood to serve multiple purposes. The first of these was to compensate patentees. See, *e.g.*, *Allen* v. *Blunt*, 1 F. Cas. 450, 460 (C.C.D. Mass. 1846); *Carlock* v. *Tappan*, 5 F. Cas. 76, 76 (C.C.S.D.N.Y. 1843). That need was particularly prominent in the early days of the patent system, when patentees lacked access to equitable relief and enhanced damages could serve as a rough substitute for an injunction. See *Seagate*, 497 F.3d at 1378 (Gajarsa, J., concurring); *Beacon Folding Mach. Co.* v. *Rotary Mach. Co.*, 17 F.2d 934, 935 (D. Mass. 1927).

Courts, however, continued to enhance damages for compensatory purposes even after the availability of injunctive relief, in part due to the difficulty of calculating precise actual damages. See *Clark* v. *Wooster*, 119 U.S. 322, 326 (1886) ("It is a general rule in patent cases that established license fees are the best measure of damages that can be used. There may be damages beyond this * * * but these are more properly the subjects of allowance by the court under the authority given to it to increase the damages."); *Armstrong* v. *Emerson Radio & Phonograph Corp.*, 132 F. Supp. 176, 179 (S.D.N.Y. 1955); see also *Trio Process Corp.* v. *L. Goldstein's Sons, Inc.*, 638 F.2d 661, 662 (3d Cir. 1981) (discussing Section 284's compensatory function).[5]

---

[5] In addition to compensating a patentee for losses caused by the infringement itself, courts relied on Section 284 to compensate the patentee for the expenses and delays of litigation. See, *e.g.*, *Teese* v. *Huntingdon*, 64 U.S. 2, 9 (1859). The need to compensate some prevailing parties for their litigation expenses ultimately led to the

In addition, courts frequently used damages enhancements to punish and deter defendants who exhibited some heightened degree of culpability in ignoring patent rights, either in their infringement or subsequent litigation conduct. See *Tilghman*, 125 U.S. at 143-144 (noting that the case-specific circumstances could warrant "inflict[ing] vindictive or punitive damages"); *Activated Sludge*, 64 F. Supp. at 36; *Wilson* v. *Union Tool Co.*, 275 F. 624, 631 (S.D. Cal. 1921).

2. Because courts employed Section 284 for compensatory purposes as well as deterrent and punitive ones, willfulness obviously was not a prerequisite to awarding enhanced damages. Instead, this Court and others treated willful infringement as a factor in the totality analysis. See, *e.g.*, *Day* v. *Woodworth*, 54 U.S. 363, 372 (1851) ("[I]f, in the opinion of the court, the defendant has not acted in good faith, or has been stubbornly litigious, or has caused unnecessary expense and trouble to the plaintiff, the court may increase the amount of the verdict, to the extent of trebling it."); *Grant Paper Box Co.* v. *Russell Box Co.*, 106 F. Supp. 616, 618-619 (D. Mass. 1952) (reaching no conclusion as to willfulness but enhancing damages by 50 percent in view of infringer's "careless[ness] in the construction of the patent" and misconduct during litigation); *Bredin* v. *Nat'l Metal Weather Strip Co.*, 182 F. 654, 662 (C.C.W.D. Pa. 1910) (considering willfulness along with abusive competitive practices); *Nat'l Folding Box & Paper Co.* v. *Elsas*, 81 F. 197, 197 (C.C.S.D.N.Y. 1897) (doubling assessed damages on the basis of both "deliberate" infringement and

---

1946 Patent Act, which permits courts to award attorney's fees in exceptional cases. See 35 U.S.C. 285.

subsequent "spiriting away of the books" to inhibit redress); *Russell* v. *Place*, 21 F. Cas. 57, 58 (C.C.N.D.N.Y. 1871) (noting that defendant's conduct "seem[ed] deliberate and intentional," but declining to make a concrete finding of willfulness and enhancing for compensatory reasons); *Guyon*, 11 F. Cas. at 133 (noting "evidence * * * tending to impeach the good faith of the defendants" but declining to enhance damages because "they abandoned their machine some time before the commencement of the suit").

3. Even when courts focused on the need to deter or punish infringement, they did not treat willfulness as a prerequisite to enhancement. To be sure, courts variously said that enhanced damages could be warranted for conduct that was

- "actuated by malice or bad faith," *Brown Bag Filling Mach. Co.*, 175 F. at 577;
- "conscious and deliberate," *Carter Prods., Inc.* v. *Colgate-Palmolive Co.*, 214 F. Supp. 383, 412 (D. Md. 1963); "deliberate and intentional," *Russell*, 21 F. Cas. at 58;
- "wanton or malicious," *Seymour*, 57 U.S. at 489; "wanton and persistent," *Brodie*, 4 F. Cas. at 203-204; "wanton and persevering," *Allen*, 1 F. Cas. at 460; "wanton or willful or aggravated," *Wilson*, 275 F. at 631;
- "willful or grossly careless," *Hartford Nat. Bank & Trust Co.* v. *E.F. Drew & Co.*, 188 F. Supp. 353, 356 (D. Del. 1960); "flagrant," *Lyon* v. *Donaldson*, 34 F. 789, 793 (C.C.N.D. Ill. 1888);

- "aggravated," *McCormick* v. *Seymour*, 15 F. Cas. 1329, 1336 (C.C.N.D.N.Y. 1854); "somewhat aggravated," *Parker* v. *Corbin*, 18 F. Cas. 1122, 1122 (C.C.D. Ohio 1848);
- "unreasonabl[e] or oppressive[]," *Stimpson* v. *The Railroads*, 23 F. Cas. 103, 104 (3d Cir. 1847); "oppressive or fraudulent," *Laskowitz* v. *Marie Designer, Inc.*, 119 F. Supp. 541, 554 (S.D. Cal. 1954); "unreasonable and unjustifiable," *Fox*, 158 F. at 428-429; "unwarranted and inexcusable," *Wensel* v. *Gold Hill Hardware Mfg. Co.*, 21 F.2d 974, 977 (S.D. Cal. 1927); or
- "careless[]," *Grant Paper Box Co.*, 106 F. Supp. at 619.

The lesson of these cases is simple: district courts often awarded enhanced damages when the infringing defendant's conduct demonstrated heightened culpability or wrongfulness, typically beyond mere negligence. See *Knorr-Bremse Systeme Fuer Nutzfahrzeuge GmbH* v. *Dana Corp.*, 383 F.3d 1337, 1342 (Fed. Cir. 2004) (en banc) ("In discussing 'willful' behavior and its consequences, the Supreme Court has observed that '[t]he word 'willful' is widely used in the law, and although it has not by any means been given a perfectly consistent interpretation, it is generally understood to refer to conduct that is not merely negligent.'") (quoting *McLaughlin* v. *Richland Shoe Co.*, 486 U.S. 128, 133 (1988)). It is hardly surprising that courts regularly invoked Section 284 in response to intentional or reckless—*i.e.*, willful—infringement. Those types of infringement are the most deserving of deterrence or punishment.

But all of this Court's cases, and virtually all of the lower courts' cases, treated willfulness only as a *sufficient* condition for enhancement, not as a *necessary* condition. Confusing that distinction was the Federal Circuit's crucial error in *Seagate*. See *Seagate*, 497 F.3d at 1381 (Gajarsa, J., concurring) ("[T]he Supreme Court cases * * * do not hold that a finding of willfulness is *necessary* to support an award of enhanced damages. * * * At most, those cases merely stand for the uncontroversial proposition that a finding of willfulness is *sufficient* to support an award of enhanced damages.") (emphases in original); see also *Dowling* v. *United States*, 473 U.S. 207, 227 n.19 (1985) (noting that "treble damages" are "available" for "willful infringement"); *Aro Mfg. Co.* v. *Convertible Top Replacement Co.*, 377 U.S. 476, 508 (1964) (noting that a plaintiff "could in a case of willful or bad-faith infringement recover punitive or 'increased' damages under the statute's trebling provision"); *Seymour*, 57 U.S. at 488; *Day*, 54 U.S. at 372. Simply put, as a historical matter, the wrongfulness of a defendant's conduct was not a prerequisite to enhancement, but rather was an important factor in the totality of circumstances.

### C. Appellate Courts Reviewed Enhancement Decisions For Abuse Of Discretion.

In accord with this Court's decisions in *Birdsall* and *Topliff*, see *supra*, p. 24, every court of appeals to consider the question held that damages enhancements should be reviewed for abuse of discretion. See *Dixie Cup Co.* v. *Paper Container Mfg. Co.*, 169 F.2d 645, 651 (7th Cir. 1948) ("This admittedly is a matter in the discretion of the court below whose judgment we would be authorized to disturb only upon a show-

ing of an abuse of such discretion."); see also *Troy Co.* v. *Prods. Research Co.*, 339 F.2d 364, 368 (9th Cir. 1964); *Randolph Labs.* v. *Specialties Dev. Corp.*, 213 F.2d 873, 875 (3d Cir. 1954); *Middleton* v. *Wiley*, 195 F.2d 844, 847 (8th Cir. 1952); *Enter. Mfg. Co.* v. *Shakespeare Co.*, 141 F.2d 916, 920 (6th Cir. 1944); *Amusement Corp. of Am.* v. *Mattson*, 138 F.2d 693, 697 (5th Cir. 1943); *Overman Cushion Tire Co.* v. *Goodyear Tire & Rubber Co.*, 66 F.2d 361, 362 (2d Cir. 1933). Different standards of review are a product of recent decades, and de novo review of any aspect of a district court's discretionary enhancement decision dates only to the Federal Circuit's 2012 decision in *Bard*.

## IV. A TOTALITY INQUIRY INFORMED BY HISTORY WILL PROTECT PROPERTY RIGHTS AND PROMOTE INNOVATION.

As the history shows, the Federal Circuit's *Seagate* test is not necessary to prevent district courts from routinely enhancing damages. The answer to that concern—rather than preserving a multi-step process that has no mooring in text or history—is to make clear that district courts should resume considering the factors that historically guided their case-by-case exercise of discretion.

### A. The Defendant's Degree Of Culpability Typically Will Be The Central Factor In The Totality Inquiry.

Because prevailing patentees are now able to seek injunctions, ongoing royalties, and attorney's fees as potential compensation, the most common purpose for Section 284 in modern times is to punish and deter culpable conduct. When a district court considers

whether to enhance damages for those reasons (only, of course, after infringement of a valid patent has been established), the principal question should be whether and to what extent the defendant's conduct was wrongful or culpable in light of the goals of the patent system. "The paramount determination in deciding to grant enhancement and the amount thereof is the egregiousness of the defendant's conduct based on all the facts and circumstances." *Read Corp.* v. *Portec, Inc.*, 970 F.2d 816, 826 (Fed. Cir. 1992).

In answering that question, the wrongfulness of a defendant's conduct should not be determined—as the Federal Circuit currently holds—by a rigid, two-step test of objective recklessness and subjective bad faith. Nor should the determination of wrongfulness be—as the Federal Circuit also holds—a mere prelude to a subsequent, discretionary weighing of various factors. Rather, consistent with the statutory text, the district court should conduct a single weighing of all factors—whether aggravating or mitigating—that are relevant to whether and to what extent damages should be enhanced. See *Octane*, 134 S. Ct. at 1756 n.6 (noting that district courts determine copyright fee awards by "consider[ing] a 'nonexclusive' list of 'factors * * * and the need in particular circumstances to advance considerations of compensation and deterrence.'" (quoting *Fogerty*, 510 U.S. at 534 n.19)).

As part of that weighing, the district court should consider whether the defendant's infringement was willful in the classic sense of the patent law—*i.e.*, whether the infringement was more than "merely negligent." *McLaughlin*, 486 U.S. at 133. That aggravating factor, considered alongside any mitigating factors, typically will determine if an enhancement is warranted and in what amount. In the event of an en-

hancement, the court should set the amount at a level commensurate with the infringer's culpability and any other considerations that militate in favor of or against enhancement. See *Providence Rubber Co.* v. *Goodyear*, 76 U.S. 788, 804 (1869) (noting that remedies for infringement "may be increased or mitigated according to the complexion of the conduct of the offender"); 5 D. Chisum, Patents § 20.03[4][b][vi] (1991) (To treble damages, "the court's assessment of the level of culpability must be high.").

### B. Courts Should Determine The Degree Of A Defendant's Culpability By Focusing On Historically Important Considerations.

1. In assessing whether an infringer's conduct bears a heightened degree of culpability (and thus is willful in the classic sense of patent law), courts have taken into account a number of different considerations. See *Read*, 970 F.2d at 827. Among them, *first*, courts considered whether the defendant deliberately copied the patented invention.[6] *Second*, courts con-

---

[6] See, *e.g.*, *Lam, Inc.* v. *Johns-Manville Corp.*, 668 F.2d 462, 475 (10th Cir. 1982) (considering "whether the infringer deliberately copied the ideas or design of another * * * [i]n determining whether an infringer acted in such bad faith as to merit an increase in the damages awarded against him"); *Milgo Electronic Corp.* v. *United Bus. Comm'ns*, 623 F.2d 645, 666 (10th Cir. 1980) ("Many courts have held that faithful copying of a patented product shows an intentional disregard for the patent owner's rights and supports an award of increased damages."); *Am. Safety Table Co.*, 415 F.2d at 378 ("Where * * * a patent infringement is willful, intentional, and deliberate an award is proper. This rule has been applied where a patented device was faithfully copied, such a faithful copying revealing an intentional disregard of patent rights." (internal quotation marks, footnote, and ellipsis omitted)); *Coleman Co.* v. *Holly Mfg. Co.*, 269 F.2d 660, 666 (9th Cir. 1959) ("[A] faithful copy-

sidered whether the defendant continued to infringe after it knew or reasonably should have known of the patent.[7] *Third*, courts considered whether the defendant, when it knew or should have known of the patent, reasonably investigated and evaluated the possibility of infringement.[8] *Fourth*, courts consid-

---

ing reveals an intentional disregard of the appellee's patent rights" sufficient to justify an award of enhanced damages.); *Lyon*, 34 F. at 791 (granting enhancement where "defendant has taken * * * two features of his machine bodily from plaintiff's machine"); *Burleigh Rock-Drill Co* v. *Lobdell*, 4 F. Cas. 750, 751 (C.C.D. Mass. 1875) ("This is not a case of wilful infringement, or of the use of a device identical with the patented one, or mere colorable attempt to evade it.").

[7] See, *e.g.*, *Read*, 970 F.2d at 827 (Courts should consider "[r]emedial action by the defendant."); *Intra Corp.* v. *Hamar Laser Instruments, Inc.*, 662 F. Supp. 1420, 1439 (E.D. Mich. 1987) (limiting enhanced damages because defendant "voluntarily ceased manufacture and sale of infringing systems during the pendency of this litigation"); *Vortex Mfg. Co.* v. *Ply-Rite Contracting Co.*, 33 F.2d 302, 313 (D. Md. 1929) (finding "the fact that defendants discontinued their infringing practices is not sufficient to save them from both an injunction, and from an accounting in damages," but the case did not "warrant the imposing of treble damages"); *Fox*, 158 F. at 428-429 (awarding treble damages where defendant "persisted in [infringing] after knowledge and notice" and "continued to infringe after suit brought"); *Emerson* v. *Simm*, 8 F. Cas. 640, 641 (C.C.D.N.J. 1873) (declining to enhance damages where defendants "abandoned all the patented appliances to the machine, when notified of their infringement, and before the suit was commenced"); *Brodie*, 4 F. Cas. at 203 (declining to enhance damages where "there is no evidence that any [of the infringing products] have been made or used by [defendants] since they had notice of the patent"); *Guyon*, 11 F. Cas. at 133.

[8] *Read*, 970 F.2d at 827 (Courts should consider "whether the infringer, when he knew of the other's patent protection, investigated the scope of the patent and formed a good-faith belief that it was invalid or that it was not infringed."); *King Instrument Corp.* v.

ered whether the question of liability—taking into account issues of infringement and invalidity—was close or clear-cut based on facts known to defendant at the time of infringement.[9] Although those four considerations were not exhaustive in determining whether a defendant's conduct was aggravated and other circumstances could be relevant in any particular case, they have provided valuable guidance to district courts in determining the degree of a defendant's culpability.

2. Focusing on those historical considerations should provide meaningful protection to less culpable

---

*Otari Corp.*, 767 F.2d 853, 867 (Fed. Cir. 1985) (examining "whether Otari secured legal advice and whether it reasonably felt that its activities fell within its own claims which may be patentably distinct."); *Lam*, 668 F.2d at 475 (Courts should consider "whether the infringer, when he knew or should have known of the other's patent protection, reasonably investigated the scope of the patent and formed a good faith belief that the patent was invalid or that it was not infringed.").

[9] *See, e.g.*, *Mowry* v. *Whitney*, 81 U.S. 620, 653 (1871) (finding no culpability where infringing process was the subject of a patent later invalidated for overlapping with plaintiff's patent); *B.F. Goodrich Co.* v. *Consol. Rubber Tire Co.*, 251 F. 617, 624 (7th Cir. 1918) (finding no culpability for infringement occurring after the patent was erroneously adjudicated invalid); *Clark* v. *Schieble Toy & Novelty Co.*, 248 F. 276, 284 (6th Cir. 1917) (finding no culpability where a patent was erroneously granted on the infringing product itself); *Philadelphia Rubber Works Co.* v. *U.S. Rubber Reclaiming Works*, 276 F. 600, 609 (W.D.N.Y. 1920) ("The validity of the * * * patent, from the outset to the final decision by the Circuit Court of Appeals, was debatable."); *Consol. Rubber Tire Co.* v. *Diamond Rubber Co.*, 226 F. 455, 464 (S.D.N.Y. 1915) (declining to enhance damages for the period during which the patent's validity remained "open to honest question"); *Toledo Computing Scale Co.* v. *Moneyweight Scale Co.*, 178 F. 557, 567 (C.C.N.D. Ill. 1910) ("After the reissue, the validity and novelty were debatable questions.").

infringers. Most obviously, two of the central historical considerations—whether the defendant deliberately copied a patented invention, and whether the defendant continued to infringe after actual or constructive knowledge of the patent—protect inadvertent or good-faith infringers against an award of enhanced damages.[10] Even in cases where one of those factors is present, the district court can tailor the amount of any enhancement to the degree of the defendant's culpability, which may take into account (for instance) what the defendant knew about its infringement or how long the infringement continued post-discovery.

The third historical consideration—whether the defendant reasonably investigated and evaluated the possibility of infringement—will often operate in a defendant's favor by allowing it to demonstrate a good-faith response to claims of infringement. See, *e.g.*, *OPTi, Inc.* v. *VIA Techs., Inc.*, 2014 WL 3853429, at *2 (E.D. Tex. Aug. 4, 2014) (declining to enhance damages where defendant upon notice "investigated whether its products infringed as alleged"); *Baden Sports, Inc.* v. *Kabushiki Kaisha Molten*, 2007 WL 2790777, at *5 (W.D. Wash. Sept. 25, 2007) (declining

---

[10] In evaluating the defendant's copying of a patented invention and its continued infringement, the court may take into account whether the defendant had an objectively reasonable belief at the time that the patent was invalid. Doing so is not barred by *Commil USA, LLC* v. *Cisco Sys., Inc.*, 135 S. Ct. 1920 (2015), which held that a good-faith belief in invalidity is not a defense to a charge of induced infringement. *Commil*'s holding was dictated by the statutory text of the inducement provision, 35 U.S.C. 271(b), which focuses only on infringement—a separate issue from invalidity. See 135 S. Ct. at 1928. No such textual bar is presented here, and there is no apparent reason why a contemporaneous reasonable belief in invalidity should not be part of the totality inquiry.

to enhance damages where defendant "presented evidence at trial suggesting that its technical department advised [it] that there was a very good chance that the '835 patent was invalid"); *Lawrence-Williams Co.* v. *Societe Enfants Gombault Et Cie*, 52 F.2d 774, 778 (6th Cir. 1931) (Treble damages usually are not justified "where a defendant infringes a patent under the advice of counsel that it is invalid."). Moreover, the defendant's response should be evaluated in light of all the relevant facts, including the nature of the patentee's claim and whether it provided adequate notice of infringement.

The reasonable-investigation consideration often will operate in defendants' favor for an additional reason. In 2011, Congress enacted 35 U.S.C. 298, which provides that "[t]he failure of an infringer to obtain the advice of counsel with respect to any allegedly infringed patent, or the failure of the infringer to present such advice to the court or jury, may not be used to prove that the accused infringer willfully infringed the patent." Section 298 is meant to "protect attorney-client privilege and to reduce pressure on accused infringers to obtain opinions of counsel for litigation purposes." H.R. Rep. No. 98, 112th Cong., 1st Sess. 53 (2011).

As a result of Section 298, a patentee seeking an enhancement may not rely on evidence that the defendant failed to obtain legal advice about the possibility of infringement (although the patentee may still introduce evidence that the defendant failed to consult non-legal sources, like its own engineers). The infringing defendant, however, may introduce evidence that it sought and received good-faith legal advice in order to rebut an allegation that its infringement was sufficiently culpable to warrant enhanced

damages. The ability of alleged infringers to introduce evidence of a variety of good-faith responses, when coupled with the protection of Section 298, provides additional assurance that enhancements will not become the norm absent *Seagate*.

The fourth historical consideration—the closeness of the case—further protects innocent infringers by ensuring that they will not be subject to enhanced damages for good-faith mistakes on difficult and novel questions. See, *e.g.*, *Deere & Co.* v. *Int'l Harvester Co.*, 658 F.2d 1137, 1146 (7th Cir. 1981); *Philadelphia Rubber Works*, 276 F. at 609. Petitioners' position is *not* that enhanced damages should be awarded in any case, or even most cases, of infringement. Many cases are close calls, and defendants typically should not be subject to damages enhancements when they adopted reasonable positions on the basis of available facts.

### C. In Certain Cases, The Defendant's Degree Of Culpability Will Not Determine The Totality Inquiry.

Even when the defendant's infringement bears a degree of heightened culpability, that does not mean such culpability is either a strict prerequisite or an automatic trigger for enhanced damages. The wrongfulness of a defendant's conduct remains part of the case-by-case inquiry committed to the discretion of the district court. Thus, even if a defendant's conduct is not aggravated in any sense, an enhancement nevertheless may be warranted because "a successful plaintiff, through no fault of its own, [is] unable to prove the real extent of damage caused by the infringement." *Seagate*, 497 F.3d at 1378 (Gajarsa, J., concurring). Alternatively, "the district court might reasonably determine that monetary relief in the form

of enhanced damages is more appropriate than an injunction." *Ibid.*

Conversely, even when a defendant's infringement is highly culpable, the district court nevertheless may decline to increase damages. For example, the court may take into account the defendant's size and financial condition, and deny an enhancement that would threaten to bankrupt the noninfringing portion of the defendant's business. See, *e.g.*, *Read*, 970 F.2d at 827 (noting as a consideration the "[d]efendant's size and financial condition"); *Kori Corp.* v. *Wilco Marsh Buggies & Draglines, Inc.*, 561 F. Supp. 512, 533 (E.D. La. 1982) (Enhanced damages "should not unduly prejudice the defendants' non-infringing business."). The nature of the patentee's business also may factor into the analysis. See, *e.g.*, *Schwarzel*, 21 F. Cas. at 773-774; *Bell* v. *McCullough*, 3 F. Cas. 108, 109 (C.C.S.D. Ohio 1858). Enhancement may be less appropriate, for instance, when requested by a patentee that relies on the threat of treble damages in order to exact exorbitant licensing fees from practicing entities. Cf. *eBay Inc.* v. *MercExchange, LLC*, 547 U.S. 388, 396 (2006) (Kennedy, J., concurring). Enhancing damages in that situation may not serve the law's goal of incentivizing innovation. *Id.* at 396-397.

## V. THE FEDERAL CIRCUIT'S CURRENT APPROACH IS UNSUPPORTABLE.

The Federal Circuit has never squared its willfulness requirement with Section 284's plain text and historical understanding. But even if the willfulness of an infringer's conduct were a prerequisite to an award of enhanced damages, that requirement should not look anything like the *Seagate* test. The Federal Circuit has based that test on misinterpretations of

this Court's decision in *Safeco Insurance Co. of America* v. *Burr*, 551 U.S. 47 (2007). Moreover, even if the *Seagate* test stands, respondents still should not prevail. In the years since *Seagate*, the Federal Circuit has doubled down on its novel approach by adopting de novo review of objective recklessness and by permitting bad-faith infringers to avoid enhanced damages based on defenses first developed in litigation. At a minimum, this Court should correct the Federal Circuit's post-*Seagate* law and allow Section 284 to achieve its goal of deterring bad-faith infringement.

### A. The Federal Circuit Has Never Reconciled A Willfulness Requirement With The Statutory Text Or Historical Practice.

Beginning primarily in the 1960s, a few circuit courts sporadically moved away from the unified, totality-of-the-circumstances inquiry. They sometimes treated enhancement decisions as a two-step process: a threshold inquiry into willfulness based on the totality of the circumstances, followed by a discretionary weighing of other factors to determine whether and to what extent an enhancement was appropriate. See *Lam*, 668 F.2d at 474; *Union Carbide Corp.* v. *Graver Tank & Mfg. Co.*, 282 F.2d 653, 675 (7th Cir. 1960); but see *Trio Process Corp.*, 638 F.2d at 662 (rejecting willfulness prerequisite). As far as petitioners are aware, these courts neither squared their new approach with Section 284's text nor justified their shift away from the historical totality standard.

The Federal Circuit's early cases vacillated on whether willfulness was a strict prerequisite to enhanced damages under Section 284. Compare *Rite-Hite Corp.* v. *Kelley Co.*, 819 F.2d 1120, 1126 (1987), with *Beatrice Foods Co.* v. *New England Printing &*

*Lithographing Co.*, 923 F.2d 1576, 1578-1579 (1991). But by the mid-1990s, the Federal Circuit had endorsed the "two[-]step process" for enhancement, although willfulness remained based on the totality of the circumstances. *Jurgens* v. *CBK, Ltd.*, 80 F.3d 1566, 1570 (Fed. Cir. 1996). Like other courts, the Federal Circuit made little effort to ground that willfulness requirement in Section 284's text, history, or purposes.

### B. The Federal Circuit Has Erred In Interpreting The Standard For Willfulness.

In 2007, the Federal Circuit in *Seagate* departed further from historical tradition by converting willfulness into a rigid, two-step test not based on the totality of the circumstances. *Seagate* purported to borrow its test from this Court's decision in *Safeco Insurance Co. of America* v. *Burr*, which involved the meaning of the statutory term "willfully" in the Fair Credit Reporting Act. Here, of course, Section 284's plain text does not contain any reference to willfulness. But even setting aside that obvious statutory difference, the Federal Circuit has erred in its treatment of *Safeco*.

1. As an initial matter, *Seagate* failed to explain why the interpretation of an express statutory term in a wholly unrelated context is relevant to patent law. Courts have consistently recognized that the concept of "willfulness" is context-dependent. As *Safeco* itself pointed out, the term "'willfully' is a 'word of many meanings.'" 551 U.S. at 57 (quoting *Bryan* v. *United States*, 524 U.S. 184, 191 (1998)); *Smith* v. *Wade*, 461 U.S. 30, 63 n.3 (1983) (Rehnquist, C.J., dissenting) (noting that the term "willful" has "no fixed meaning"). In light of its inherent plasticity, context is

crucially important in determining the meaning of willfulness within a particular body of law. See *ibid.* (arguing with respect to willfulness that "for the meaning intended in a particular context, reference must be had to the decisions at issue").

Because Section 284 does not use the term "willfulness," the relevant context must be drawn from history. As explained above, in the 170 years preceding *Seagate*, the term "willful" in patent infringement cases signified a level of heightened culpability greater than negligence on the part of the infringing defendant. See *supra*, pp. 32-34. The Federal Circuit did not need to look beyond the historical meaning of willfulness in the patent context. In any event, the Federal Circuit should have reached the same conclusion under *Safeco*, which adopted "the traditional understanding of willfulness" as either "acts known to violate" or "reckless disregard of" the law. 551 U.S. at 56-57, 59. The customary test for willfulness—*i.e.*, knowledge or recklessness—asks simply whether the defendant's infringement was more than merely negligent.

2. Even assuming that *Safeco* sets a different standard for willfulness than the patent law, and that the Federal Circuit was justified in looking outside the patent law for its standard, *Seagate* and subsequent cases are still wrong. The Federal Circuit has misunderstood *Safeco* in two crucial respects.

a. As an initial matter, the Federal Circuit has ignored that willfulness includes knowing and intentional infringement in addition to reckless infringement. As the *Safeco* Court explained, "where willfulness is a statutory condition of civil liability," the term generally means "not only knowing violations of a standard, but reckless ones as well." 551 U.S. at 57.

In other words, the Court treated "knowing violation[s]" and "reckless ones" as different species of willfulness. *Ibid.*

By contrast, the Federal Circuit held in *Seagate* that "to establish willful infringement," a patent holder must prove recklessness by clear and convincing evidence. 497 F.3d at 1371. Although the Federal Circuit acknowledged that willfulness merely "*includes* reckless behavior," *ibid.* (emphasis added), it has treated *Seagate*'s test for recklessness as the exclusive test for willfulness. The Federal Circuit has repeatedly reversed enhanced damages awards under the *Seagate* test, even in the face of findings that a defendant's infringement was knowing or intentional. This case is a perfect example: the district court found that Zimmer intentionally copied a patented product in bad faith, see Pet. App. 52a-53a, and the Federal Circuit nevertheless reversed the damages enhancement.

Knowledge and intent are a far more straightforward way than recklessness to analyze cases like this one. When a defendant knows of a patent and copies the patented invention, absent an objectively reasonable belief that the patent is invalid, the defendant's infringement is knowing or intentional (and thus willful). By ignoring the role of knowledge and intent in the analysis, the Federal Circuit has opened an indefensible loophole in willfulness: defendants who intentionally infringe patent rights—which is to say, the most culpable of all infringers—can escape enhanced damages by arguing that their actions were not reckless. That perverse result does not make any sense.[11]

---

[11] The Federal Circuit recently suggested that enhancement can rest on either "actual knowledge" of infringement or "proof of will-

b. Even assuming cases like this one should be analyzed as reckless violations rather than knowing or intentional ones, the Federal Circuit has wrongly interpreted recklessness. Specifically, the Federal Circuit has held since *Seagate* that arguments developed solely for litigation and not known to the infringer at the time of infringement can preclude a finding of recklessness, unless they are shown to be unreasonable by clear and convincing evidence. In essence, the defendant's ability to present any marginally nonfrivolous defense categorically defeats a patentee's request for enhanced damages. In the past year alone, the Federal Circuit has reversed several enhanced damages awards against bad-faith infringers simply because they advanced minimally plausible, *post hoc* defenses. See, *e.g.*, *Innovention Toys, LLC* v. *MGA Entm't, Inc.*, 611 Fed. Appx. 693, 700-701 (Fed. Cir. 2015); *Global Traffic Techs. LLC* v. *Morgan*, 2015 WL 3513416, at *7-8 (Fed. Cir. June 4, 2015); *Carnegie Mellon Univ., Ltd.*, 2015 WL 4639309, at *13-15.

That approach cannot be squared with *Safeco*.[12] To be sure, *Safeco* rejected the argument that "evidence

---

fulness" under the two-prong *Seagate* test. *Carnegie Mellon Univ.* v. *Marvell Tech. Grp., Ltd.*, 2015 WL 4639309, at *12 (Aug. 4, 2015). That statement simply repeats one of *Seagate*'s basic errors, by equating willfulness with recklessness. Moreover, the Federal Circuit has never given any content to the "actual knowledge" requirement, and it has repeatedly reversed damages enhancements in cases where, as here, the defendant knew that it was infringing. See *id.* at *13-14.

[12] It also cannot be squared with this Court's prior decisions regarding Section 284. In *Topliff*, for instance, this Court held that it would "not have disturbed the decree of the court below if it had seen fit to increase the damages," even though the "novelty" of the

of subjective bad faith can support a willfulness finding" when the defendant adopted an "objectively reasonable" interpretation of its legal duties. 551 U.S. at 70 n.20. But as the Court explained, "Congress could not have intended such a result for those who *followed* an interpretation that could reasonably have found support in the courts, whatever their subjective intent may have been." *Ibid.* (emphasis added). In other words, the relevant question is whether, *at the time of its disputed conduct*, the defendant adopted an objectively reasonable position, whatever its subjective motivations.[13] See *Prosser and Keeton on Torts*, § 34 at 213-214 (5th ed. 1984) (noting that willfulness is often found where a defendant "has proceeded in disregard of a high and excessive degree of danger, either known to him or apparent to a reasonable person *in his position*") (emphasis added).

The Federal Circuit's expansion of *Seagate* is a world apart from that: it allows infringers who acted in bad faith to put forward after-the-fact defenses on which they never relied at the time of infringement. That approach makes no sense, particularly where the goal is to deter culpable conduct. A defendant who proceeds deliberately in the face of an obvious risk of harm is no less culpable simply because he later invents a defense to justify his behavior. The *Seagate* approach altogether misses this basic point, thereby

---

patented device "[was] by no means free from doubt." 145 U.S. at 164, 174.

[13] The Court in *Safeco* left open the possibility that "good-faith reliance on legal advice" would prevent conduct from being willful. 551 U.S. at 70 n.20. As that reservation indicates, recklessness must be assessed based on the facts as they were known to the defendant at the time.

ratifying "intentional disregard" of patent rights. *Seagate*, 497 F.3d at 1385 (Newman, J., concurring).

Moreover, as a practical matter, an accused infringer is virtually always able to devise an after-the-fact defense that is not frivolous. Determining issues of validity and infringement—including, for example, whether a particular claim is "obvious" in light of the prior art known to one of ordinary skill—often involves analyzing technical patent claims and specifications. Thus, even when the legal issues presented in an infringement suit are relatively clear-cut upon close examination, the sheer technical nature of the questions involved has dissuaded courts from declaring losing defenses objectively unreasonable. The upshot is that even the most culpable infringers can avoid enhanced damages by conjuring up any plausible (though incorrect) defense. The Federal Circuit has taken a patent regime configured to promote creative genius and reconfigured it to reward creative litigation.

The Federal Circuit has compounded its error by failing to evaluate an infringer's defenses properly in two ways. *First*, in determining whether a defense is plausible, the Federal Circuit does not explicitly take into account the patent's presumption of validity. See 35 U.S.C. 282(a) ("A patent shall be presumed valid."). But the presumption remains intact at all times until it "has been overcome by convincing evidence of error." *Microsoft Corp.* v. *i4i Ltd. P'ship*, 131 S. Ct. 2238, 2248 (2011) (quoting *Radio Corp. of Am.* v. *Radio Eng'g Labs.*, 293 U.S. 1, 7 (1934)). The plausibility of an infringer's defense should be undertaken with an eye toward the end game: did the defense have a plausible chance of rebutting the presumption of invalidity and actually invalidating the patent? When the

answer to that question is no, the defense should not be a bar—as it may be now—to an award of enhanced damages.

*Second*, the Federal Circuit has held that considerations of objective risk are strictly segregated from considerations of subjective bad faith. See *Halo Electronics, Inc.* v. *Pulse Electronics, Inc.*, 780 F.3d 1357, 1362 (Fed. Cir. 2015) (O'Malley, J., dissenting) (noting the "evidentiary wall * * * between the objective and subjective portions of the inquiry"); *Powell* v. *Home Depot U.S.A., Inc.*, 663 F.3d 1221, 1236 (Fed. Cir. 2011). Under this approach, for instance, evidence of intentional copying—which is directly relevant to obviousness and, in turn, to the risk of liability—cannot be considered in evaluating the objective reasonableness of an infringing defendant's position. In this very case, the Federal Circuit held that in assessing the objective reasonableness of Zimmer's defenses, the district court should have ignored "that Zimmer all but instructed its design team to copy Stryker's products." Pet. App. 22a (internal quotation marks omitted). That artificial segregation of evidence regarding subjective bad faith has no basis in law or logic, and it aggravates *Seagate*'s harmful consequences.

### C. The Federal Circuit's Approach Severely Underdeters Culpable Infringement.

*Seagate* was motivated in part by the Federal Circuit's view that enhanced damages should not be available in run-of-the-mill cases. See 497 F.3d at 1369, 1371. On that, petitioners are in complete agreement. But the Federal Circuit has crafted an inflexible standard that sets the bar too high, resulting in severe underdeterrence of culpable infringe-

ment. Because of the "great pressure to copy a competitor's patented invention" in highly competitive, technical fields, "the threat of treble damages" is meant "to persuade these companies that their best economic option is to respect valid patents." 157 Cong. Rec. S1374 (daily ed. Mar. 8, 2011) (statement of Sen. Kyl). As explained above, Section 284 does not serve that function under current Federal Circuit precedent, because the most egregious infringers are typically able to avoid any enhancement.

This case is a textbook example of a bad-faith infringer that opted to risk litigation rather than respect its competitor's valid patents. As the district court put it, "this was not a close case": Zimmer "handed [an] independent contractor a copy of Stryker's product and said, 'Make one for us.'" Pet. App. 51a, 53a. Moreover, Zimmer continued to sell its copies even after the court's summary judgment rulings and the jury's subsequent verdict that Zimmer was infringing. As the court noted, Zimmer's continuing infringement was "consistent with both [its] market and litigation strategy * * * of competing immediately and aggressively * * * and opt[ing] to worry about the potential legal consequences later." *Id.* at 52a. The Federal Circuit's approach is precluding enhanced damages in what should be easy cases under Section 284.

More generally, the most readily available form of relief for patentees is a reasonable royalty—both a retrospective royalty to compensate for past harm and, for those who cannot obtain an injunction under *eBay Inc.*, 547 U.S. 388, a prospective royalty to compensate for future harm. See *Uniloc USA, Inc.* v. *Microsoft Corp.*, 632 F.3d 1292, 1312 (Fed. Cir. 2011) ("A reasonable royalty is the predominant measure of

damages in patent infringement cases."). A reasonable royalty alone, however, does little to deter disregard of patent rights, because in many cases it "leave[s] the defendant no worse off as a result of the infringement" than if it had negotiated a license ex ante or sought to design around. Thomas F. Cotter, *An Economic Analysis of Enhanced Damages and Attorney's Fees for Willful Patent Infringement*, 14 Fed. Cir. Bar J. 291, 316 (2004). Indeed, one of the central purposes of enhanced damages is to "discourage infringement of a patent by anyone thinking that all he would be required to pay if he loses the suit would be a royalty." S. Rep. No. 1503, 79th Cong., 2d Sess. 2 (1946). The Section 284 standard should not encourage infringers to roll the dice on litigation.

### D. Congress Has Not Ratified Or Acquiesced In The Federal Circuit's Approach.

1. As a last refuge, respondents will argue that Congress has accepted the Federal Circuit's approach over the years through its changes to the patent laws. But when Congress reorganized the patent laws in 1952 and enacted the current version of Section 284, courts were virtually uniform in following petitioners' approach: courts conducted a single inquiry based on the totality of the circumstances, in which the willfulness of the defendant's infringement was one relevant consideration. Simply put, if Congress has ratified any approach here, it is petitioners'. See *Bragdon* v. *Abbott*, 524 U.S. 624, 645 (1998). But at a minimum, the meaning of the term "willfulness" was not sufficiently well-established in 1952 for Congress to have accepted respondents' interpretation.

2. Congress also did not ratify a willfulness prerequisite in the America Invents Act. If anything, the

opposite is true. The Senate considered amending Section 284 to require "that an infringer has willfully infringed a patent." S. 515, 111th Cong. (2010); see S. Rep. No. 18, 111th Cong., 1st Sess. 94 (2009); 157 Cong. Rec. S134-S135 (daily ed. Jan. 25, 2011). But that proposal met with serious opposition and was not included in the final bill. See, *e.g.*, S. Rep. No. 18, 111th Cong., 1st Sess. 53, 58-60 (2009); 157 Cong. Rec. S940 (daily ed. Feb. 28, 2011); *id.* S1374 (daily ed. Mar. 8, 2011). Nothing in the AIA suggests that Congress views willfulness as a prerequisite to enhanced damages, let alone as a rigid, dual-pronged requirement.

To be sure, the AIA states that "[t]he failure of an infringer to obtain the advice of counsel with respect to any allegedly infringed patent, or the failure of the infringer to present such advice to the court or jury, may not be used to prove that the accused infringer *willfully infringed* the patent." 35 U.S.C. 298 (emphasis added). But in altering one specific aspect of how the Federal Circuit determines willfulness, Congress did not implicitly ratify the remainder of the Federal Circuit's willfulness framework. See, *e.g.*, *Alexander* v. *Sandoval*, 532 U.S. 275, 292 (2001) (noting that, "[a]s a general matter," arguments about legislative acquiescence "deserve little weight in the interpretive process") (quoting *Central Bank of Denver, N.A.* v. *First Interstate Bank of Denver, N.A.*, 511 U.S. 164, 187 (1994) (brackets in original; second brackets omitted)).[14]

---

[14] Section 298 could not possibly have ratified the Federal Circuit's subsequent, post-2011 decisions adopting de novo review for objective recklessness or allowing post hoc defenses to preclude a finding of objective recklessness.

Nor does Section 298's use of the term "willfully" mean that willfulness must continue to operate as a prerequisite to enhanced damages. Section 298's bar will continue to apply whether willfulness is a prerequisite or instead a factor in the totality inquiry. On petitioners' approach, Section 298 will serve its intended function because district courts will conduct a totality inquiry but will be barred from considering defendants' failure to consult legal counsel about the possibility of infringement.

## VI. THIS COURT SHOULD REVERSE THE DECISION BELOW IN RELEVANT PART.

After finding objective recklessness and subjective bad faith, the district court in this case evaluated the totality of the circumstances (including Zimmer's egregious conduct), trebled the jury's damages award, and granted attorney's fees. Pet. App. 116a-120a. The Federal Circuit did not disturb that analysis, but instead held that Zimmer's infringement was not objectively reckless because Zimmer had presented one minimally plausible defense for each patent in this litigation. *Id.* at 22a-23a. If the Court holds that willfulness is not a prerequisite to the totality inquiry, or that willfulness does not demand objective recklessness as the Federal Circuit understands that requirement, then the Court should reverse the Federal Circuit's vacatur of the district court's awards of enhanced damages and attorney's fees. The district court already conducted the necessary totality inquiry, and nothing suggests that court abused its discretion. See *Faragher* v. *City of Boca Raton*, 524 U.S. 775, 809-810 (1998). At a minimum, this Court should remand the case to the Federal Circuit for a determi-

nation whether the district court abused its discretion in enhancing damages and awarding attorney's fees.

## CONCLUSION

For the reasons set forth above, the relevant portions of the judgment below should be reversed or at a minimum vacated and remanded.

Respectfully submitted.

SHARON A. HWANG
DEBORAH A. LAUGHTON
STEPHANIE F. SAMZ
MCANDREWS HELD & MALLOY LTD.
500 West Madison Street
Suite 3400
Chicago, IL 60661
(312) 775-8000

GARRARD R. BEENEY
ROBERT J. GIUFFRA, JR.
SULLIVAN & CROMWELL LLP
125 Broad Street
New York, NY 10004
(212) 558-4000

JEFFREY B. WALL
*Counsel of Record*
AUSTIN L. RAYNOR
SULLIVAN & CROMWELL LLP
1700 New York Avenue, N.W.
Suite 700
Washington, DC 20006
(202) 956-7500
wallj@sullcrom.com

DECEMBER 9, 2015

No. 14-1520

IN THE

# Supreme Court of the United States

STRYKER CORPORATION, STRYKER PUERTO RICO, LTD., AND STRYKER SALES CORPORATION,
*Petitioners*,

*v.*

ZIMMER, INC. AND ZIMMER SURGICAL, INC.,
*Respondents*.

**ON WRIT OF CERTIORARI TO THE UNITED STATES COURT OF APPEALS FOR THE FEDERAL CIRCUIT**

## BRIEF FOR RESPONDENTS


MARK C. FLEMING
REBECCA A. BACT
WILMER CUTLER PICKERING HALE AND DORR LLP
60 State Street
Boston, MA 02109

DONALD R. DUNNER
FINNEGAN, HENDERSON, FARABOW, GARRETT & DUNNER
901 New York Ave., NW
Washington, DC 20001

SETH P. WAXMAN
*Counsel of Record*
THOMAS G. SAUNDERS
THOMAS G. SPRANKLING
JOHN B. SPRANGERS*
WILMER CUTLER PICKERING HALE AND DORR LLP
1875 Pennsylvania Ave., NW
Washington, DC 20006
(202) 663-6000
seth.waxman@wilmerhale.com

JASON D. HIRSCH
WILMER CUTLER PICKERING HALE AND DORR LLP
7 World Trade Center
250 Greenwich Street
New York, NY 10007

## QUESTION PRESENTED

Whether damages in a patent infringement case may be trebled under 35 U.S.C. § 284, even though the defendant presents objectively reasonable defenses that the patent-in-suit is invalid or not infringed.

## CORPORATE DISCLOSURE STATEMENT

Zimmer Surgical, Inc. is wholly owned directly or indirectly by Zimmer, Inc. Zimmer, Inc. is wholly owned directly or indirectly by Zimmer Biomet Holdings, Inc. More than 10% of the stock of Zimmer Biomet Holdings, Inc. is held by a consortium of private equity funds affiliated with four investment firms, three of which, the Blackstone Group L.P., Kohlberg Kravis Roberts & Co., L.P., and the Goldman Sachs Group, Inc., are publicly traded.

## TABLE OF CONTENTS


Page

QUESTION PRESENTED ..... i

CORPORATE DISCLOSURE STATEMENT ..... ii

TABLE OF AUTHORITIES ..... vi

INTRODUCTION ..... 1

STATEMENT ..... 3

A. Zimmer's Products And Stryker's Patents ..... 3

B. Zimmer's Defenses ..... 4

C. Proceedings Below ..... 7

SUMMARY OF ARGUMENT ..... 8

ARGUMENT ..... 11

I. AN AWARD OF ENHANCED DAMAGES REQUIRES A THRESHOLD SHOWING OF WILLFULNESS ..... 11

A. The Willfulness Requirement Was Well-Established Long Before § 284's Enactment ..... 11

B. Congress Did Not Change The Settled Judicial Interpretation Requiring Willfulness When It Enacted § 284 ..... 17

C. Courts Continued Applying The Willfulness Requirement After § 284's Enactment ..... 19

D. The Federal Circuit Temporarily Deviated From The Willfulness Requirement In *Underwater Devices* ..... 22

**TABLE OF CONTENTS—Continued**

Page

E. The Federal Circuit Restored The Willfulness Requirement And Brought Predictability To The Law In *Seagate* ..... 24

F. Congress Retained The *Seagate* Standard When It Reenacted § 284 In The Leahy-Smith America Invents Act Of 2011 ..... 26

II. STRYKER'S AND THE GOVERNMENT'S ARGUMENTS FOR ABANDONING *SEAGATE* ARE UNAVAILING ..... 30

A. *Octane* And *Highmark* Do Not Control This Case ..... 30

B. The Objective Prong Of The *Seagate* Test Is Consistent With This Court's Jurisprudence And The Statute's Purposes ..... 34

C. The *Seagate* Test Advances The Purposes Of The Patent Act ..... 45

1. *Seagate* encourages challenges to bad patents ..... 45

2. Abandoning *Seagate*'s objective prong would harm American business ..... 48

III. TO THE EXTENT THE COURT REACHES THE QUESTIONS, THE DE NOVO STANDARD OF REVIEW AND CLEAR-AND-CONVINCING-EVIDENCE STANDARD OF PROOF SHOULD BE RETAINED ..... 51

## TABLE OF CONTENTS—Continued

Page

A. The De Novo Standard Of Review Should Be Retained ..... 52

B. The Clear-And-Convincing-Evidence Standard Should Be Retained ..... 55

CONCLUSION ..... 57

## TABLE OF AUTHORITIES

### CASES

Page(s)

*Activated Sludge* v. *Sanitary District*, 64 F. Supp. 25 (N.D. Ill. 1946) ..... 20

*Agency Holding Corp.* v. *Malley-Duff & Associates*, 483 U.S. 143 (1987) ..... 32

*American Safety Table Co.* v. *Schreiber*, 415 F.2d 373 (2d Cir. 1969) ..... 20, 21

*Aro Manufacturing Co.* v. *Convertible Top Replacement Co.*, 377 U.S. 476 (1964) ..... 17, 21, 32

*Austin-Western Road Machinery Co.* v. *Disc Grader & Plow Co.*, 291 F. 301 (8th Cir. 1923) ..... 14

*Bard Peripheral Vascular, Inc.* v. *W.L. Gore & Associates*, 682 F.3d 1003 (Fed. Cir. 2012) ..... 34, 42, 52

*Bard Peripheral Vascular, Inc.* v. *W.L. Gore & Associates*, 776 F.3d 837 (Fed. Cir. 2015) ..... 42

*Baseball Display Co.* v. *Star Ballplayer Co.*, 35 F.2d 1 (3d Cir. 1929) ..... 13

*Baumstimler* v. *Rankin*, 677 F.2d 1061 (5th Cir. 1982) ..... 20

*Birdsall* v. *Coolidge*, 93 U.S. 64 (1876) ..... 54

*Blonder-Tongue Laboratories, Inc.* v. *University of Illinois Foundation*, 402 U.S. 313 (1971) ..... 46

*BMW of North America, Inc.* v. *Gore*, 517 U.S. 559 (1996) ..... 42

**TABLE OF AUTHORITIES—Continued**

Page(s)

*Bonito Boats, Inc.* v. *Thunder Craft Boats, Inc.*, 489 U.S. 141 (1989) ..... 45

*Brooks Furniture Manufacturing, Inc.* v. *Dutailier International, Inc.*, 393 F.3d 1378 (Fed. Cir. 2005) ..... 34

*Cincinnati Siemens-Lungren Gas Illuminating Co.* v. *Western Siemens-Lungren Co.*, 152 U.S. 200 (1894) ..... 12

*City of Dearborn Heights Act 345 Police & Fire Retirement System* v. *Waters Corp.*, 632 F.3d 751 (1st Cir. 2011) ..... 41

*Clark* v. *Wooster*, 119 U.S. 322 (1886) ..... 15

*Commil USA, LLC* v. *Cisco Systems, Inc.*, 135 S. Ct. 1920 (2015) ..... 49

*Consolidated Rubber Tire Co.* v. *Diamond Rubber Co.*, 226 F. 455 (S.D.N.Y. 1915) ..... 14

*Cooper Industries, Inc.* v. *Leatherman Tool Group, Inc.*, 532 U.S. 424 (2001) ..... 55

*Corning* v. *Burden*, 56 U.S. (15 How.) 252 (1854) ..... 12

*Day* v. *Woodworth*, 54 U.S. (13 How.) 363 (1852) ..... 14, 15

*Dean* v. *Mason*, 61 U.S. (20 How.) 198 (1858) ..... 12

*Dowling* v. *United States*, 473 U.S. 207 (1985) ..... 21, 23

*eBay Inc.* v. *MercExchange, LLC*, 547 U.S. 388 (2006) ..... 49

**TABLE OF AUTHORITIES—Continued**

Page(s)

*Egry Register Co.* v. *Standard Register Co.*, 23 F.2d 438 (6th Cir. 1928) ..... 14

*Eltra Corp.* v. *Basic Inc.*, 599 F.2d 745 (6th Cir. 1979) ..... 20, 32

*Exxon Shipping Co.* v. *Baker*, 554 U.S. 471 (2008) ..... 32, 42

*Farmer* v. *Brennan*, 511 U.S. 825 (1994) ..... 37, 39

*Filer & Stowell Co.* v. *Diamond Iron Works*, 270 F. 489 (7th Cir. 1921) ..... 14

*Florida Prepaid Postsecondary Education Expense Board* v. *College Savings Bank*, 527 U.S. 627 (1999) ..... 23, 31

*Fryer* v. *A.S.A.P. Fire & Safety Corp.*, 658 F.3d 85 (1st Cir. 2011) ..... 41

*FTC* v. *Network Services Depot, Inc.*, 617 F.3d 1127 (9th Cir. 2010) ..... 41

*Fuges* v. *Southwest Financial Services, Ltd.*, 707 F.3d 241 (3d Cir. 2012) ..... 44

*Funai Electric Co.* v. *Daewoo Electronics Corp.*, 616 F.3d 1357 (Fed. Cir. 2010) ..... 54

*General Motors Corp.* v. *Devex Corp.*, 461 U.S. 648 (1983) ..... 31

*General Store, Inc.* v. *Van Loan*, 560 F.3d 920 (9th Cir. 2009) ..... 41

*Goodyear Tire & Rubber Co.* v. *Overman Cushion Tire Co.*, 95 F.2d 978 (6th Cir. 1937) ..... 13, 54

**TABLE OF AUTHORITIES—Continued**

Page(s)

*Graper* v. *Mid-Continent Casualty Co.*, 756 F.3d 388 (5th Cir. 2014) ..... 35, 36

*Hammer* v. *Sam's East, Inc.*, 754 F.3d 492 (8th Cir. 2014) ..... 40

*Harlow* v. *Fitzgerald*, 457 U.S. 800 (1982) ..... 40

*Highmark Inc.* v. *Allcare Health Management Systems, Inc.*, 134 S. Ct. 1744 (2014) ..... 30

*i4i Ltd. Partnership* v. *Microsoft Corp.*, 598 F.3d 831 (Fed. Cir. 2010) ..... 1

*In re Seagate Technology, LLC*, 497 F.3d 1360 (Fed. Cir. 2007) (en banc) ..... *passim*

*Island Software & Computer Service, Inc.* v. *Microsoft Corp.*, 413 F.3d 257 (2d Cir. 2005) ..... 35, 36

*Jones* v. *United Parcel Service, Inc.*, 674 F.3d 1187 (10th Cir. 2012) ..... 53

*Kingsley* v. *Hendrickson*, 135 S. Ct. 2466 (2015) ..... 40, 47

*Knorr-Bremse Systeme Fuer Nutzfahrzeuge GmbH* v. *Dana Corp.*, 383 F.3d 1337 (Fed. Cir. 2004) ..... 24, 32

*Kolstad* v. *American Dental Ass'n*, 527 U.S. 526 (1999) ..... 47

*Lam, Inc.* v. *Johns-Manville Corp.*, 668 F.2d 462 (10th Cir. 1982) ..... 20

*Lear* v. *Adkins*, 359 U.S. 653 (1969) ..... 46

*Levine* v. *World Financial Network National Bank*, 554 F.3d 1314 (11th Cir. 2009) ..... 40, 45

**TABLE OF AUTHORITIES—Continued**

Page(s)

*Livingston* v. *Woodworth*, 56 U.S. (15 How.) 546 (1854) ..... 12

*Long* v. *Tommy Hilfiger U.S.A., Inc.*, 671 F.3d 371 (3d Cir. 2012) ..... 44

*Lorillard* v. *Pons*, 434 U.S. 575 (1978) ..... 27

*Louis Vuitton Malletier, SA* v. *Akanoc Solutions, Inc.*, 658 F.3d 936 (9th Cir. 2011) ..... 35

*Lyons Partnership, LP* v. *Morris Costumes, Inc.*, 243 F.3d 789 (4th Cir. 2001) ..... 35

*Martinez Carcamo* v. *Holder*, 713 F.3d 916 (8th Cir. 2013) ..... 43

*Mathis* v. *Spears*, 857 F.2d 749 (Fed. Cir. 1988) ..... 32

*Mayo Collaborative Services* v. *Prometheus Laboratories, Inc.*, 132 S. Ct. 1289 (2012) ..... 48

*McLaughlin* v. *Richland Shoe Co.*, 486 U.S. 128 (1988) ..... 35, 36

*Medtronic, Inc.* v. *Mirowski Family Ventures, LLC*, 134 S. Ct. 843 (2014) ..... 46

*Merck & Co.* v. *Reynolds*, 559 U.S. 633 (2010) ..... 19

*Microsoft Corp.* v. *i4i Ltd. Partnership*, 131 S. Ct. 2238 (2011) ..... 52, 55

*New England Fibre Blanket Co.* v. *Portland Telegram*, 61 F.2d 648 (9th Cir. 1932) ..... 14

*Nintendo of America, Inc.* v. *Dragon Pacific International*, 40 F.3d 1007 (9th Cir. 1994) ..... 36

**TABLE OF AUTHORITIES—Continued**

Page(s)

*NLRB* v. *W.C. McQuaide, Inc.*, 552 F.2d 519 (3d Cir. 1977) ..... 43

*North Star Steel Co.* v. *Thomas*, 515 U.S. 29 (1995) ..... 19

*Octane Fitness, LLC* v. *ICON Health & Fitness*, 134 S. Ct. 1749 (2014) ..... 17, 30, 34

*Ornelas* v. *United States*, 517 U.S. 690 (1996) ..... 52

*Overman Cushion Tire Co.* v. *Goodyear Tire & Rubber Co.*, 66 F.2d 361 (2d Cir. 1933) ..... 54

*Pacific Mutual Life Insurance Co.* v. *Haslip*, 499 U.S. 1 (1991) ..... 53, 56

*Pierce* v. *Underwood*, 487 U.S. 552 (1988) ..... 52, 53

*Pope Manufacturing Co.* v. *Gormully*, 144 U.S. 224 (1892) ..... 45

*Professional Real Estate Investors, Inc.* v. *Columbia Pictures Industries*, 508 U.S. 49 (1993) ..... 34

*Raylon, LLC* v. *Complus Data Innovations, Inc.*, 700 F.3d 1361 (Fed. Cir. 2012) ..... 33

*RCA/Ariola International, Inc.* v. *Thomas & Grayston Co.*, 845 F.2d 773 (8th Cir. 1988) ..... 35

*Roberts* v. *Sea-Land Services, Inc.*, 132 S. Ct. 1350 (2012) ..... 51

*Rockwood* v. *General Fire Extinguisher Co.*, 37 F.2d 62 (2d Cir. 1930) ..... 13, 54

*Rompilla* v. *Beard*, 545 U.S. 374 (2005) ..... 47

**TABLE OF AUTHORITIES—Continued**

Page(s)

*Root* v. *Lake Shore & M.S. Railway Co.*, 105 U.S. 189 (1882) ..... 12

*Safeco Insurance Co. of America* v. *Burr*, 551 U.S. 47 (2007) ..... *passim*

*Scott* v. *Harris*, 550 U.S. 372 (2007) ..... 52

*Sensonics, Inc.* v. *Aerosonic Corp.*, 81 F.3d 1566 (Fed. Cir. 1996) ..... 32

*Seymour* v. *McCormick*, 57 U.S. (16 How.) 480 (1854) ..... 11, 31, 32

*Shatterproof Glass Corp.* v. *Libbey-Owens Ford Co.*, 758 F.2d 613 (Fed. Cir. 1985) ..... 55

*Smith* v. *Wade*, 461 U.S. 30 (1983) ..... 36

*Spine Solutions, Inc.* v. *Medtronic Sofamor Danek USA, Inc.*, 620 F.3d 1305 (Fed. Cir. 2010) ..... 42

*State Farm Mutual Automobile Insurance* v. *Campbell*, 538 U.S. 408 (2003) ..... 33, 42

*Sutton* v. *Gulf Smokeless Coal Co.*, 77 F.2d 439 (4th Cir. 1935) ..... 13

*Teese* v. *Huntingdon*, 64 U.S. (23 How.) 2 (1860) ..... 15

*Terry* v. *Ohio*, 392 U.S. 1 (1968) ..... 47

*Tilghman* v. *Proctor*, 125 U.S. 136 (1888) ..... 12, 15

*Topliff* v. *Topliff*, 145 U.S. 156 (1892) ..... 54

*Trans World Airlines, Inc.* v. *Thurston*, 469 U.S. 111 (1985) ..... 35, 36

## TABLE OF AUTHORITIES—Continued

Page(s)

*Trio Process Corp.* v. *L. Goldstein's Sons, Inc.*, 638 F.2d 661 (3d Cir. 1981) ..... 21

*Underwater Devices Inc.* v. *Morrison-Knudsen Co.*, 717 F.2d 1380 (Fed. Cir. 1983) ..... 22

*Union Carbide Corp.* v. *Graver Tank & Manufacturing Co.*, 282 F.2d 653 (7th Cir. 1960) ..... 19, 20, 32

*United States ex rel. Purcell* v. *MWI Corp.*, 807 F.3d 281 (D.C. Cir. 2015) ..... 41, 52

*United States* v. *Nerber*, 222 F.3d 597 (9th Cir. 2000) ..... 52

*Van Straaten* v. *Shell Oil Products Co.*, 678 F.3d 486 (7th Cir. 2012) ..... 52

*Wilden Pump & Engineering Co.* v. *Pressed & Welded Products Co.*, 655 F.2d 984 (9th Cir. 1981) ..... 20

*Yellow Pages Photos, Inc.* v. *Ziplocal, LP*, 795 F.3d 1255 (11th Cir. 2015) ..... 35, 36

## STATUTES, RULES, AND REGULATIONS

15 U.S.C.
§ 15 ..... 32
§ 1117 ..... 37

17 U.S.C. § 504 ..... 36, 37

18 U.S.C. § 1964 ..... 32

**TABLE OF AUTHORITIES—Continued**

Page(s)

35 U.S.C.
§ 284 ..... *passim*
§ 285 ..... *passim*
§ 298 ..... 26

42 U.S.C. § 1983 ..... 36

Leahy-Smith America Invents Act, Pub. L. No. 112-29, 125 Stat. 335 (2011) ..... 26

Patent Act of 1946, Pub. L. No. 79-587, 60 Stat. 778 (1946) ..... 17

**LEGISLATIVE MATERIALS**

H.R. Rep. No. 82-1923 (1952) ..... 18

H.R. Rep. No. 112-98 (2011) ..... 27

S. Rep. No. 102-280 (1992) ..... 23

S. Rep. No. 111-18 (2009) ..... 26, 29

*Recovery in Patent Infringement Suits: Hearing on H.R. 5231 Before the House Committee on Patents*, 79th Cong. (1946) ..... 18

*Crossing the Finish Line on Patent Reform: Hearing Before the House Subcommittee on Intellectual Property, Competition, & the Internet*, 112th Cong. (2011) ..... 29

*Review of Recent Judicial Decisions on Patent Law: Hearing Before House Subcommittee on Intellectual Property, Competition, & the Internet*, 112th Cong. (2011) ..... 28

92 Cong. Rec. 1857 (1946) ..... 17, 18

98 Cong. Rec. 9097 (1952) ..... 18

## TABLE OF AUTHORITIES—Continued

Page(s)

157 Cong. Rec.
2857 (2011) ..... 28
2859 (2011) ..... 28
3401 (2011) ..... 28
3427 (2011) ..... 27

## OTHER AUTHORITIES

Chien, Colleen V., *Predicting Patent Litigation*, 90 Texas L. Rev. 283 (2011) ..... 47

7 *Chisum on Patents* § 20.03 (2014) ..... 14

Federico, P.J., *Commentary on the New Patent Act*, 75 J. Pat. & Trademark Off. Soc'y 161 (1993) ..... 18

FTC, *To Promote Innovation* (Oct. 2003) ..... 22

Keeton, W. Page, et al., *Prosser and Keeton on Law of Torts* (5th ed. 1984) ..... 12, 35, 38

Lemley, Mark A. & A. Douglas Melamed, *Missing the Forest for the Trolls*, 113 Colum. L. Rev. 2117 (2013) ..... 49

Lemley, Mark A. & Carl Shapiro, *Probabilistic Patents*, 19 J. Econ. Persp. 75 (2005) ..... 46

Lemley, Mark A. & Ragesh K. Tangri, *Ending Patent Law's Willfulness Game*, 18 Berkeley Tech. L.J. 1085 (2003) ..... 22

Love, Brian J. & Shawn Ambwani, *Inter Partes Review: An Early Look at the Numbers*, 81 U. Chi. L. Rev. Dialogue 93 (2014) ..... 46

**TABLE OF AUTHORITIES—Continued**

Page(s)

Markel, Dan, *How Should Punitive Damages Work?*, 157 U. Pa. L. Rev. 1383 (2009) ..... 56

Mulligan, Christina & Timothy B. Lee, *Scaling the Patent System*, 68 N.Y.U. Ann. Surv. L. 289 (2012) ..... 48

National Research Council of the National Academies, *A Patent System for the 21st Century* (Stephen A. Merrill et al. eds., 2004) ..... 50

Peters, Amanda, *The Meaning, Measure, and Misuse of Standards of Review*, 13 Lewis & Clark L. Rev. 233 (2009) ..... 53

Powers, Matthew D. & Steven C. Carlson, *The Evolution and Impact of the Doctrine of Willful Patent Infringement*, 51 Syracuse L. Rev. 53 (2001) ..... 22

*Restatement of Torts* (1938) ..... 42

*Restatement (Second) of Torts* (1965) ..... 37, 39

Seaman, Christopher B., *Willful Patent Infringement and Enhanced Damages After* In re Seagate, 97 Iowa L. Rev. 417 (2012) ..... 50

Taylor, Edwin H. & Glenn E. Von Tersch, *A Proposal to Shore up the Foundations of Patent Law that the* Underwater *Line Eroded*, 20 Hastings Comm. & Ent. L.J. 721 (1998) ..... 22

## TABLE OF AUTHORITIES—Continued

Page(s)

Wheeler, Malcolm, *The Constitutional Case for Reforming Punitive Damages Procedures*, 69 Va. L. Rev. 269 (1983).....56

## INTRODUCTION

For over 150 years, a patentee seeking the punitive remedy of enhanced damages has had to demonstrate that the defendant infringed in an unusually flagrant manner. This Court first articulated the requirement in 1854, and the courts of appeals repeatedly held that enhancement requires proof of willful infringement. In 1952, Congress enacted 35 U.S.C. § 284 against this background understanding—that enhanced damages may only be awarded to punish willful infringers. Since *In re Seagate Technology, LLC*, 497 F.3d 1360 (Fed. Cir. 2007) (en banc), the Federal Circuit has applied a predictable framework drawn from this Court's precedent to assess whether a given defendant engaged in willful infringement. Under this test, willful infringement requires proof that (1) "the infringer acted despite an objectively high likelihood that its actions constituted infringement of a valid patent" and (2) "this objectively-defined risk ... was either known or so obvious that it should have been known to the accused infringer." *Id.* at 1371 (citing *Safeco Ins. Co. of Am.* v. *Burr*, 551 U.S. 47 (2007)). If both requirements are met and willfulness is established, the district court may exercise its discretion to determine whether the particular facts of the case merit enhanced damages. *i4i Ltd. P'ship* v. *Microsoft Corp.*, 598 F.3d 831, 859 (Fed. Cir. 2010), *aff'd*, 131 S. Ct. 2238 (2011). Congress's enactment of the America Invents Act (AIA) in 2011 reflects awareness and approval of this established test.

Stryker now seeks to uproot the longstanding threshold requirement of willfulness and replace it with an approach that would permit district courts to impose enormous punitive damages with few limits and minimal oversight. Even the government agrees that § 284

cannot be stretched that far and applies only in the most "egregious" cases. U.S. Br. 10.

More broadly, both Stryker's and the government's approaches offer no way for the numerous companies and people who may be accused of infringement—including manufacturers, retailers, and end users—to anticipate whether they risk being subject to punitive damages if they choose to challenge a questionable patent. This unpredictability would drive companies to settle even marginal claims and would increase the incentives to file questionable patent suits, which already drain massive resources. Eliminating the *Seagate* test would also encourage forum shopping.

Neither Stryker nor the government presents good reason for this Court to inflict such a substantial drag on the American economy. The current *Seagate* test in general, and its objective prong in particular, are well in line with this Court's precedent governing willfulness in the context of civil remedies. Indeed, this Court has already expressly rejected the notion that it should consider "evidence of subjective bad faith" despite "objectively reasonable" behavior by a civil defendant. *Safeco*, 551 U.S. at 70 n.20.

Nothing in 35 U.S.C. § 285 or this Court's recent application of it warrants a contrary result. Section 285 allows prevailing parties to recover attorneys' fees expended defending meritless suits, and thus serves a compensatory purpose, not a punitive purpose like § 284. Section 285 also lacks § 284's long interpretive history.

Stryker's desired approach has no grounding in law or public policy. The Federal Circuit's judgment should be affirmed.

## STATEMENT

### A. Zimmer's Products And Stryker's Patents

Zimmer and Stryker manufacture pulsed lavage devices that squirt fluid and apply suction during medical operations. Pet. App. 4a. The basic concept existed long before the patents-in-suit, and the pulsed lavage market is crowded and heavily patented. *Id.* 4a-5a; *see, e.g.*, CAJA16693 (early design of pulsed lavage device). The patents Stryker asserted here are directed to particular combinations of elements used in pulsed lavage devices that are portable and battery powered. Pet. App. 4a.

Zimmer began manufacturing portable, battery powered pulsed lavage devices years before the first of Stryker's asserted patents issued. In 1996, Zimmer released the Var-A-Pulse. Pet. App. 5a. In 1998, Zimmer began working on an updated design, known as the Pulsavac Plus. *Id.* At the time, none of the patents-in-suit had issued. Indeed, Stryker conceded below that Zimmer did not "bec[o]me aware of the patents-in-suit" until "*after* the Pulsavac Plus hit the market." Dist. Ct. Dkt. 496, at 22-23 (emphasis added).

The first of Stryker's three asserted patents (U.S. Patent No. 6,022,329) did not issue until 2000. Pet. App. 5a. Although Stryker inspected Zimmer's devices that year, it did not file suit against Zimmer. CAJA129. In 2001, a second Stryker patent issued (U.S. Patent No. 6,179,807), based on an application that was not filed until after Zimmer's Var-A-Pulse launched. Pet. App. 5a. A third Stryker patent (U.S. Patent No. 7,144,383) issued in 2006. *Id.* Stryker still did not sue Zimmer until 2010—a decade after its first patent issued. *Id.*

### B. Zimmer's Defenses

Zimmer presented robust defenses to Stryker's infringement allegations. Zimmer argued its products did not satisfy the '329 patent's claim limitation requiring a "handle" and "electric motor spaced *between the top and bottom* of said handle and located *in said handle*." JA104 (emphasis added). Stryker's product, unlike Zimmer's, did have an electric motor *in* the handle:

**Stryker SurgiLav Plus**

Stryker C.A. Br. 6 (annotation added). Figure 4 of the '329 patent likewise showed the motor *in* the handle, as opposed to the barrel:

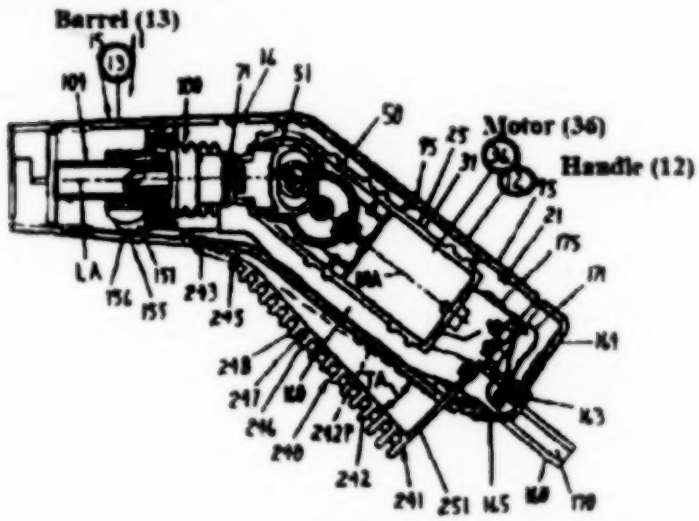


Zimmer C.A. Br. 7 (annotating CAJA307).

In contrast, the motor in Zimmer's Pulsavac Plus "is not located in the handle—rather, it is located in the

'nub' of the handpiece, the protrusion behind the barrel." Pet. App. 8a.

Zimmer C.A. Br. 24 (annotating CAJA9829). Far from merely copying Stryker's product, Zimmer's improvement allowed for a smaller and more ergonomic handle, avoided having an internal motor that would heat the handle, and facilitated a more balanced design.

The distinction between placing the motor in the handle and in the barrel was one that Stryker itself relied on to convince the Patent Office that its patent claims were distinguishable from prior art with a motor placement similar to Zimmer's. Pet. App. 10a; *see also* JA404 (district court acknowledging that "Stryker made [such statements] in an effort to distinguish its own products from the prior art of the Mattchen patent").

**Mattchen Prior Art** **Zimmer's Product**

CAJA16615.

In denying Stryker's motion for summary judgment of infringement of the '329 patent, the district court held that "Zimmer ha[d] produced [sufficient] evidence" to "allow the jury to decide in its favor." JA403-404.

Regarding the '807 patent, Zimmer contended that its accused products did not meet the claim limitation requiring a handpiece with "a front end for *receiving* the discharge tube and the suction tube." JA187 (emphasis added). Zimmer explained that this claim limitation "requires ... male openings on the [removable] tip [of the device] that fit into the female nozzles on the handpiece." Pet. App. 14a; *see also id.* ("various dictionary definitions" show "'receive'" means "'contain'" or "'hold'"). Zimmer's accused products embody the opposite design: they include "female openings on the tip" that receive the "tapered male nozzles on the handpiece." *Id.*

Zimmer also presented evidence that the '807 patent's asserted claims were invalid as anticipated by Zimmer's prior art Var-A-Pulse device. Stryker's own expert witness conceded that the Var-A-Pulse included "all of the limitations of the asserted four claims of the '807 patent," JA441, except for the requirement that there be "a lock assembly mounted to the front end of said body for releasably securing the discharge tube and the suction tube," Pet. App. 16a. The district court construed "lock assembly" broadly to mean any "components that work together to secure or fasten the tip to the handpiece," *id.*, and noted that Zimmer "can plausibly argue to a jury" that the Var-A-Pulse included this limitation, thus invalidating the '807 patent. JA406.

Finally, Zimmer argued that the '383 patent was invalid as obvious. Stryker did not dispute that "all of the limitations of the '383 patent's asserted claims were collectively present in the prior art references." Pet. App. 18a. The primary difference between the lead reference and the '383 patent was that the former used a pneumatic motor and the latter an electric motor. Zimmer contended that replacing a pneumatic motor with an electric one would be entirely predictable to an ordinarily-skilled artisan. *Id.* 18a-19a. Indeed, the Patent Office rejected similar claims in a related Stryker patent application on the ground that substituting an electric motor would be obvious. JA371-385; JA454-455. Stryker "ultimately abandoned" that application without contesting the rejection. Pet. App. 19a.

### C. Proceedings Below

At trial, the jury sided with Stryker on infringement and invalidity. It also found that Zimmer willfully infringed Stryker's patents. The jury was not asked to, and did not, make any finding of subjective bad faith or vexatious conduct by Zimmer. Rather, the jury was instructed that "[w]illfulness focuses on whether Zimmer acted recklessly." JA462. It was also instructed that, even in the absence of actual knowledge, the subjective component of the test could be met if Zimmer "should have known that its actions constituted an unjustifiably high risk of infringement of a valid patent." JA463.

The jury awarded Stryker $70 million in lost profits. Pet. App. 5a. The district court denied Zimmer's post-trial motions and awarded an additional $6.1 million in supplemental damages, $12.2 million in prejudgment interest, and $8 million in attorneys' fees. JA483-484; Dist. Ct. Dkts. 565-566. The court also enjoined

the Pulsavac Plus products found to infringe the '807 patent. The court then trebled the entire lost profits and supplemental damages amounts and awarded over $152 million in enhanced damages under 35 U.S.C. § 284, for a total judgment exceeding $248 million.

Zimmer appealed. Although the Federal Circuit affirmed the liability judgment under the highly deferential standard for review of jury verdicts, it reversed the district court's decision to treble the damages award. Pet. App. 21a-24a.[1] The court of appeals explained that "an objective assessment of the case shows that Zimmer presented reasonable defenses to all of the asserted claims of Stryker's patents." *Id.* 23a; *see also id.* 23a-24a (assessing each of Zimmer's defenses). In particular, it noted that whether the '807 patent was infringed was "a close case." *Id.* 16a, 23a-24a.

The panel also held that, because the district court had "failed to undertake an objective assessment of Zimmer's specific defenses to Stryker's claims," "the district court erred under any standard of review." Pet. App. 22a & n.6. The panel therefore held that it "need not now address what standard of review is proper regarding the objective prong of willfulness." *Id.*

## SUMMARY OF ARGUMENT

I. The rule that a threshold showing of willfulness is required before enhanced damages can be awarded stretches back 150 years; it has been repeatedly fol-

---

[1] The Federal Circuit also held that the district court's analysis of Stryker's disclaimer of devices with the motor in the barrel "was flawed," Pet. App. 11a, and that the district court "incorrectly instructed" the jury on patent marking, *id.* 21a n.5. The court deemed both errors harmless.

lowed by this Court and the courts of appeals ever since. Congress enacted 35 U.S.C. § 284 against this backdrop and gave no indication that it intended to depart from the settled rule requiring willfulness. To the contrary, the legislative history of § 284 supports a willfulness requirement, and Congress recently relied on the Federal Circuit's settled interpretation of § 284 to preserve the existing willfulness test in the 2011 America Invents Act.

II. Nothing in *Octane* or *Highmark* warrants discarding the well-established willfulness requirement. Those cases involved 35 U.S.C. § 285, which provides for attorneys' fees to compensate prevailing parties and does not serve the same punitive purpose as § 284. Moreover, the attorneys' fees provision was first inserted into the statute in 1946 and lacked the same long interpretative history.

By contrast, the Federal Circuit's *Seagate* test, which requires a showing that the defendant acted despite "an objectively high likelihood that its actions constituted infringement of a valid patent," is in line with both the long tradition of requiring proof of willfulness and the punitive nature of § 284. This Court has required objectively reckless behavior to support a willfulness finding, and the *Seagate* opinion expressly relied on that precedent. An objective requirement is also in line with the Patent Act's goals of spurring innovation and encouraging challenges to the validity and scope of questionable patents. And *Seagate*'s objective test properly takes account of defenses developed during litigation, as a contrary rule would discourage such challenges and place an unreasonable burden on industry to conduct and document a thorough investigation of every potentially relevant patent.

Stryker's nebulous "totality of the circumstances" approach would have a substantial, negative impact on the American economy. The unpredictable threat of treble damages in every patent case would drive companies to settle even marginal claims and increase the incentive for questionable patent suits, which already drain massive resources from the economy each year. Eliminating the *Seagate* test would also encourage forum shopping and discourage companies from reading patents.

III. Stryker has not identified any reason why this Court need decide the proper appellate standard of review for willfulness or the level of evidence needed to establish it—neither issue is dispositive to this case or its companion.

If this Court considers the issues, both de novo review and the clear-and-convincing-evidence standard should be retained. The de novo standard flows naturally from the legal nature of the objective recklessness inquiry, as well as from the punitive nature of an enhanced damages award. The clear-and-convincing-evidence standard likewise follows from § 284's purpose of punishing only the most reprehensible infringers. The evidentiary requirement has been in place for over three decades and was implicitly reaffirmed by Congress when it reenacted § 284 in the AIA. Accordingly, there is no reason to disturb the judgment of the court of appeals.

## ARGUMENT

### I. AN AWARD OF ENHANCED DAMAGES REQUIRES A THRESHOLD SHOWING OF WILLFULNESS

#### A. The Willfulness Requirement Was Well-Established Long Before § 284's Enactment

Congress was not writing on a blank slate when it enacted 35 U.S.C. § 284. For over 150 years, this Court and others have required a threshold finding of willful or wanton infringement before the punitive sanction of enhanced patent damages could be awarded. Congress incorporated that settled interpretation into § 284. Congress then reinforced the point in 2011 when it reenacted § 284 and added a separate provision addressing the proof required to establish willfulness with full awareness of the Federal Circuit's *Seagate* decision and the intent that it would remain the law.

1. This Court first emphasized the high bar for awarding enhanced patent damages more than 150 years ago. In *Seymour* v. *McCormick*, 57 U.S. (16 How.) 480, 488-489 (1854), this Court stated that enhanced damages should be awarded only in limited circumstances and reserved for the most wanton infringers. This Court described the earlier Patent Act of 1800, which had made treble damages mandatory in all infringement cases, as "manifestly unjust" because it left ordinary infringement defendants "liable to the same penalty with the wanton and malicious pirate." *Id.* Under the 1836 Act at issue in *Seymour*, in contrast, the trial court could "inflict vindictive or punitive damages" only for a "wanton or malicious" patent-infringement "injury." *Id.*; *see also Safeco Ins. Co. of Am.* v. *Burr*, 551 U.S. 47, 57 (2007) (noting that "the terms 'willful,' 'wanton,' and 'reckless' ... have been treated as meaning the same thing, or at least as com-

ing out at the same legal exit" (quoting Keeton et al., *Prosser and Keeton on Law of Torts* § 34, at 212 (5th ed. 1984) (*Prosser and Keeton*) (quotation marks omitted))).

The Court similarly emphasized the limited circumstances that might justify enhanced damages in a pair of cases decided the same year as *Seymour*. In *Corning* v. *Burden*, 56 U.S. (15 How.) 252, 271 (1854), the Court observed that where a "defendant has acted in good faith, and is not a wanton infringer of the plaintiff's rights," it should not be subject to "the same stringent and harsh rule of damages which might justly be inflicted on a mere pirate." In *Livingston* v. *Woodworth*, 56 U.S. (15 How.) 546, 560 (1854), the Court characterized enhanced damages as a "penalty" and held that, even assuming they were available in equity, there was "no ground" to inflict them, because the defendants were "in no correct sense [] wanton infringers." *Id.*

This Court considered enhanced damages several more times during the nineteenth century and repeatedly made clear that they should be reserved for a narrow class of highly culpable offenders. For example, the Court explained that enhanced damages are intended to "punish[]" patent infringement occurring "under aggravated circumstances." *Dean* v. *Mason*, 61 U.S. (20 How.) 198, 203 (1858). The Court similarly described enhanced damages as fundamentally "punitive." *See Tilghman* v. *Proctor*, 125 U.S. 136, 143-144 (1888); *Root* v. *Lake Shore & M.S. Ry. Co.*, 105 U.S. 189, 196 (1882); *see also Cincinnati Siemens-Lungren Gas Illuminating Co.* v. *Western Siemens-Lungren Co.*, 152 U.S. 200, 204 (1894) (applying *Seymour* to a contract dispute involving patented goods, and reasoning that there was "nothing that suggests punitive damages"

where the defendant's conduct was not "wanton and willful"); *see generally* U.S. Br. 13.

Indeed, although Stryker argues (at 30) that "heightened culpability was treated as a sufficient condition for enhancing damages, but not a necessary one," no case from this Court has ever actually upheld an award of enhanced patent damages on any other basis.

2. Following this Court's guidance, the courts of appeals repeatedly held that an award of enhanced damages required a threshold showing of willfulness.

*Rockwood* v. *General Fire Extinguisher Co.*, 37 F.2d 62 (2d Cir. 1930), is representative of the case law in the 50 years preceding enactment of 35 U.S.C. § 284 in 1952. Although the district court had trebled the plaintiff's damages, the Second Circuit reversed the trebling because the infringement "was not wanton and deliberate." *Id.* at 63, 66. As proof that the infringement was not willful, the Second Circuit stated that the "validity of the patent and its infringement was open to honest doubt." *Id.* at 66.

Similarly, in *Goodyear Tire & Rubber Co.* v. *Overman Cushion Tire Co.*, 95 F.2d 978, 986 (6th Cir. 1937), the Sixth Circuit held that the district court's punitive damages award rested on a finding of "conscious and deliberate" infringement that lacked evidentiary support. Without support for such a finding, the Sixth Circuit ordered that "no punitive damages shall be assessed." *Id.*

Other courts of appeals followed a similar approach. *E.g.*, *Baseball Display Co.* v. *Star Ballplayer Co.*, 35 F.2d 1, 4 (3d Cir. 1929) (punitive damages allowed "because of the deliberate and willful infringement"); *Sutton* v. *Gulf Smokeless Coal Co.*, 77 F.2d 439, 441 (4th

Cir. 1935) (per curiam) (finding of "willful and deliberate" infringement justified "trebling the amount awarded as damages"); *Filer & Stowell Co.* v. *Diamond Iron Works*, 270 F. 489, 490 (7th Cir. 1921) (enhanced damages warranted for "flagrant and willful" infringement); *Austin-W. Rd. Mach. Co.* v. *Disc Grader & Plow Co.*, 291 F. 301, 302-305 (8th Cir. 1923) (no error in increasing damages where the infringement was "deliberate and wanton"); *New England Fibre Blanket Co.* v. *Portland Telegram*, 61 F.2d 648, 649 (9th Cir. 1932) (acknowledging enhanced damages are available for "deliberate and willful" infringement); *see also Egry Register Co.* v. *Standard Register Co.*, 23 F.2d 438, 443 (6th Cir. 1928) ("no basis" for a finding of willfulness, and thus no way to "justify the statutory increase of damages," where "[b]oth as to validity and infringement there was doubt"); *Consolidated Rubber Tire Co.* v. *Diamond Rubber Co.*, 226 F. 455, 463 (S.D.N.Y. 1915) (L. Hand, J.) (characterizing enhanced damages as punitive and declining to award punitive damages for the period where the infringement was not "wanton"—that is, "where the validity of the patent remained open to honest question"), *aff'd*, 232 F. 475 (2d Cir. 1916).

3. Stryker attempts to muddy the state of pre-1952 law by arguing (at 30-32) that enhanced damages were also available for non-punitive purposes and therefore did not require a showing of willfulness. But Stryker's cited authorities are inapposite. *Day* v. *Woodworth*, 54 U.S. (13 How.) 363 (1852), was a common law trespass case that only mentioned patent infringement damages in the course of deciding whether actual damages could be increased in a trespass action. *See* 7 *Chisum on Patents* § 20.03 n.111 (2014) (describing *Day*'s patent discussion as "pure dictum"). The passing statements regarding enhanced damages in

*Clark* v. *Wooster*, 119 U.S. 322 (1886), and *Teese* v. *Huntingdon*, 64 U.S. (23 How.) 2 (1860), were also dicta that was not carried forward by later cases. More fundamentally, the dicta in all three cases related to recovering attorneys' fees and costs. *Day*, 54 U.S. (13 How.) at 372 ("counsel-fees and expenses"); *Teese*, 64 U.S. (23 How.) at 8 ("Counsel fees"); *Clark*, 119 U.S. at 326 ("the expense and trouble the plaintiff has been put to"). Any suggestion that enhanced damages can be stretched to cover such expenses cannot survive Congress's decision to channel any non-punitive enhancements into a separate provision authorizing attorneys' fees. *See* 35 U.S.C. § 285; *cf.* U.S. Br. 21 n.19.

Stryker also contends (at 27-28) that courts historically analyzed enhanced damages under a totality-of-the-circumstances test. But the principal case Stryker cites for this proposition made clear that the relevant "circumstances" must justify "inflict[ing] *vindictive or punitive damages*." *Tilghman*, 125 U.S. at 143-144 (emphasis added). *Tilghman* is thus fully consistent with the willfulness requirement applied below.

Furthermore, Stryker elides the important distinction between the threshold question of whether a case is *eligible* for enhancement and the separate question of *how much* enhanced damages are appropriate. The second question necessarily entails an exercise of discretion in light of multiple factors, but that inquiry should not be confused with the threshold question of eligibility, which—as discussed above—historically was not relegated to open-ended discretion, but rather required proof of willfulness. *See supra* pp. 11-14.

Finally, Stryker's heavy reliance (at 26-33) on nineteenth century and district court cases largely ignores the wealth of court of appeals precedent from the first

half of the twentieth century requiring a threshold showing of willfulness. *Supra* pp. 13-14. To the extent there were earlier outliers or variations in the formulations used, precedent from the courts of appeals clarified the law in the intervening years before Congress enacted § 284.

4. In contrast to Stryker, the government recognizes (at 10-11) that the early cases did not endow district courts with unbridled discretion to impose enhanced damages without a threshold showing of heightened culpability. The government simply advances an alternative phrasing of the threshold requirement: the "infringement" must be "marked by egregious misconduct." U.S. Br. 11. But the government's own citations show (at 14) that the predominant formulation in the decades immediately preceding § 284's enactment was willfulness. Willfulness was also the term Members of Congress and the Executive Branch used to describe the high threshold they wanted to maintain when enacting § 284. *Infra* pp. 17-18.

Regardless of which term is used, the basic point is the same: By the time Congress enacted § 284 in 1952, a century of case law had established that enhanced damages were not a tool to be wielded in each district judge's broad discretion; rather, they were punitive sanctions reserved for rare cases that met a stringent standard of eligibility. *See, e.g.*, AIPLA Br. 3-12 ("This Court has been consistent in construing the Patent Act to require willful infringement as a predicate to enhanced damages ever since *Seymour* v. *McCormick* was decided in 1854."); Askeladden Br. 7-9 ("[O]ver a course of decades, courts repeatedly rejected increased damages in cases where infringement was not willful."); IP Professors Br. 3 ("[The] authority to increase damages is used only in situations where the infringer en-

gaged in egregious or especially wrongful infringement of a patent, a concept generally known as willful infringement."); Public Knowledge Br. 8 ("In *Seymour* v. *McCormick*, this Court recognized a willfulness requirement in the then-prevailing enhanced damages statute. ... This willfulness requirement would remain undisturbed for over a century.").

### B. Congress Did Not Change The Settled Judicial Interpretation Requiring Willfulness When It Enacted § 284

The 1946 and 1952 Patent Acts were enacted against the specific understanding that enhanced damages are appropriate only after a threshold showing of willfulness.

The Patent Act of 1946 significantly revised the scope of utility patent damages by eliminating the historic remedy of disgorging the infringer's profits. *See Aro Mfg. Co.* v. *Convertible Top Replacement Co.*, 377 U.S. 476, 505-507 (1964) (citing Pub. L. No. 79-587, 60 Stat. 778 (1946)). Congress also added the first attorneys' fees provision to the Patent Act. *Octane Fitness, LLC* v. *ICON Health & Fitness, Inc.*, 134 S. Ct. 1749, 1753 (2014). However, Congress did not change the enhanced damages provisions, on the stated understanding that those provisions required willful infringement. Representative Lanham explained that "[t]he inventor is not limited to merely collecting the royalty. I would say that in the case of an innocent infringer ... that it would be unreasonable to collect from him more than the reasonable royalty ... [b]ut if there has been a willful infringement, then the damages as set out in the bill can be collected." 92 Cong. Rec. 1857 (1946). Similarly, Representative Cravens noted that enhanced "damages

could still be recovered under the existing law in the case of willful infringement." *Id.*

The Executive Branch shared this view. Department of Justice representative John Stedman testified before the House Committee on Patents that an infringer "is faced with the threat of exemplary or punitive damages *in the case of willful infringement.*" *Recovery in Patent Infringement Suits: Hearing on H.R. 5231 Before the H. Comm. on Patents*, 79th Cong. 18 (1946) (emphasis added). Condor C. Henry, the Assistant Commissioner of Patents, likewise explained that the 1946 Act incorporated "present law" that "[i]f the infringement complained of is wanton or in reckless disregard of complainants' rights, under this bill he may be allowed punitive damages for the infringement ... sufficient to punish the respondent and to deter others from committing like offenses of infringement." *Id.* 9-10; *see also Safeco*, 551 U.S. at 57 ("the terms 'willful,' 'wanton,' and 'reckless' ... have been treated as meaning the same thing").

The Patent Act of 1952 also incorporated this settled understanding of the limits on enhanced damages. Its damages provision simply "consolidate[d] provisions in two sections of the old statute" relating to damages while simplifying their language. Federico, *Commentary on the New Patent Act*, 75 J. Pat. & Trademark Off. Soc'y 161, 216 (1993) (reprinted from 35 U.S.C.A. (1954)); *see also* H.R. Rep. No. 82-1923, at 29 (1952) (noting that § 284 "consolidates the provisions relating to damages" with certain wording changes); 98 Cong. Rec. 9097 (1952) (Sen. Wiley) (describing bill immediately before passage as largely a "codification" or "restatement" of existing law).

This Court "assume[s] that, when Congress enacts statutes, it is aware of relevant judicial precedent," *Merck & Co.* v. *Reynolds*, 559 U.S. 633, 648 (2010), and "expect[s] its enactment[s] to be interpreted in conformity with them," *North Star Steel Co.* v. *Thomas*, 515 U.S. 29, 34 (1995). By the time Congress enacted § 284, a century of case law had made clear that enhanced damages were reserved for the most wanton and culpable conduct—specifically, willful infringement. Congress gave no indication that it intended to deviate from that longstanding rule.

Accordingly, when Congress provided that "the court may increase the damages up to three times the amount found or assessed," 35 U.S.C. § 284, it did not dispense with "any specific condition that must be satisfied before courts may award enhanced damages," as Stryker contends (at 18). Rather, it left the established restrictions on such damages in place.

### C. Courts Continued Applying The Willfulness Requirement After § 284's Enactment

Courts continued to apply the willfulness requirement after § 284 was enacted. For example, the leading case from the Seventh Circuit concluded that § 284 allowed courts to assess punitive damages only for "conscious and willful infringement." *Union Carbide Corp.* v. *Graver Tank & Mfg. Co.*, 282 F.2d 653, 673-675 (7th Cir. 1960). In *Union Carbide*, after concluding that the defendant had infringed a patent for a chemical agent used in welding, the district court increased the damages on the basis of, among other things, the "long and expensive" litigation history in the case, but did not find that the infringement was willful. *Id.* at 673. The Seventh Circuit rejected the district court's justifications for enhancing damages, for "it is only on the basis

of conscious and willful infringement that exemplary or punitive damages are allowed." *Id.* at 675.[2]

Other courts of appeals followed *Union Carbide*. The Sixth Circuit held that "to support such an increased, punitive award there must be a finding that the infringement was wilful." *Eltra Corp.* v. *Basic Inc.*, 599 F.2d 745, 757 (6th Cir. 1979). The Ninth Circuit stated that "willful, intentional and deliberate" infringement is "subject to an award of increased damages" and infringement is not willful "where the validity of the patent and any possible infringement is open to honest doubt." *Wilden Pump & Eng'g Co.* v. *Pressed & Welded Prods. Co.*, 655 F.2d 984, 988 (9th Cir. 1981) (internal quotation marks omitted). The Fifth Circuit held that trebling damages under § 284 "is within the discretion of the District Court when the infringement is willful and wanton." *Baumstimler* v. *Rankin*, 677 F.2d 1061, 1073 (5th Cir. 1982). And the Tenth Circuit explained that "[c]ourts have limited the increase [of damages under § 284] to instances in which the infringement was willful." *Lam, Inc.* v. *Johns-Manville Corp.*, 668 F.2d 462, 474 (10th Cir. 1982).[3]

---

[2] *Union Carbide* distinguished an outlier district court case that Stryker cites. *Compare* 282 F.2d at 675, *with* Stryker Br. 27-28, 31 (citing *Activated Sludge* v. *Sanitary Dist.*, 64 F. Supp. 25 (N.D. Ill. 1946)).

[3] Stryker cites (at 28, 37 n.6) *American Safety Table Co.* v. *Schreiber*, 415 F.2d 373 (2d Cir. 1969), but that case supports Zimmer. In *American Safety*, the Second Circuit agreed with the district court that some amount of enhanced damages was appropriate because the defendant had infringed with "deliberation and abandon." *Id.* at 379 n.11; *see also id.* at 378 (noting that "[t]he special master properly recognized that '[a]wards of increased damages are made ... only when a clear showing of deliberate infringement justifies the exercise of the Court's discretion'").

This Court did not directly address the standard for enhanced damages after § 284 was enacted, but it did briefly refer to the issue on two occasions. In *Aro Manufacturing Co.* v. *Convertible Top Replacement Co.*, 377 U.S. at 508, the Court stated that a plaintiff could "recover punitive or 'increased' damages" under § 284 for "willful or bad-faith infringement." Stryker cites *Aro* (at 34) as evidence that willfulness is not a prerequisite to enhancement, but the case, which was about contributory infringement and did not involve enhanced damages, did not purport to change the standard. Moreover, *Aro* was followed by *Dowling* v. *United States*, 473 U.S. 207, 227 n.19 (1985), which stated that "[a]mong the available remedies" for patent infringement "are treble damages *for willful infringement.*" (Emphasis added.) *Dowling* described no other scenario under which enhanced damages could be awarded. Certainly, neither *Dowling* nor *Aro* supports Stryker's argument (at 34) that "the wrongfulness of a defendant's conduct was not a prerequisite to enhancement."

---

While the district court had noted that the infringement did not amount to "the *ultimate* in willfulness," this statement merely explained why it had limited the *amount* of enhanced damages. *See id.* at 379 n.11 (awarding a smaller enhancement of damages than the maximum) (emphasis added). It did not purport to dispense with the willfulness requirement.

Stryker also (at 30, 44) cites *Trio Process Corp.* v. *L. Goldstein's Sons, Inc.*, 638 F.2d 661 (3d Cir. 1981), but that case merely stated in dicta the court's view that enhanced damages can be remedial rather than punitive. *Trio Process*'s actual holding is fully consistent with the decision below: the district court was correct to enhance damages due to defendants' "willful infringement" and such damages were "punitive." *Id.* at 663-664.

### D. The Federal Circuit Temporarily Deviated From The Willfulness Requirement In *Underwater Devices*

Until 1983, "it remained the general rule ... that a plaintiff could not obtain an award of increased damages unless it proved by clear and convincing evidence that the defendant consciously and willfully copied the patented invention." Powers & Carlson, *The Evolution and Impact of the Doctrine of Willful Patent Infringement*, 51 Syracuse L. Rev. 53, 70 (2001). However, shortly after the Federal Circuit was created, it changed course. In *Underwater Devices Inc.* v. *Morrison-Knudsen Co.*, 717 F.2d 1380, 1390 (Fed. Cir. 1983), the court held that enhanced damages could be awarded based on a threshold finding of negligence—*i.e.*, where the potential infringer had actual notice of another's patent rights and failed to exercise due care in determining whether or not his conduct was infringing.

The *Underwater Devices* regime was widely condemned. The Federal Trade Commission noted that *Underwater Devices* "works to undermine the patent system's disclosure goals by discouraging third parties from reading patents" and "introduces unnecessary uncertainty, raises risks, and reduces efficiency." FTC, *To Promote Innovation*, ch. 5, at 30 (Oct. 2003). Companies that did not stop reading patents often had to pay for opinions of counsel and waive privilege to shield themselves from claims for treble damages. Lemley & Tangri, *Ending Patent Law's Willfulness Game*, 18 Berkeley Tech. L.J. 1085, 1087, 1092 (2003). Commentators also noted that "[a]s a result [of the *Underwater Devices* regime], willful infringement is pleaded so often that judges must think it is a single word." Taylor & Von Tersch, *A Proposal to Shore up the Foundations*

*of Patent Law that the* Underwater *Line Eroded*, 20 Hastings Comm. & Ent. L.J. 721, 724 (1998).

Despite *Underwater Devices*, other institutions continued to use the well-established willfulness standard. As noted, this Court's discussion of enhanced damages in 1985 stated that the remedies for patent infringement include "treble damages *for willful infringement*." *Dowling*, 473 U.S. at 227 n.19 (emphasis added).

Congress also continued embracing the historic willfulness requirement. For example, in explaining why the Senate Judiciary Committee had rejected an amendment to the Patent and Plant Variety Protection Remedy Clarification Act that would have barred courts from imposing enhanced damages on States, the Committee Report noted that "[t]he standard for receiving treble damages in a patent suit is very difficult to attain ... [because a] plaintiff must prove that the infringement was willful under 35 U.S.C. [§] 284." S. Rep. No. 102-280, at 10-11 (1992); *cf. Florida Prepaid Postsecondary Educ. Expense Bd.* v. *College Sav. Bank*, 527 U.S. 627, 630-631 (1999) (striking down provision that States could be sued for patent infringement as an improper abrogation of state sovereign immunity).

The Executive Branch likewise adhered to the view that willfulness was a prerequisite to enhanced damages. For example, in *Florida Prepaid*, the United States argued that enhanced damages can be awarded "only in cases of willful infringement" and that "[t]he standard for receiving treble damages in a patent suit is very difficult to attain, and such awards are made only in the most flagrant cases." U.S. Br. 45, *Florida Prepaid*, No. 98-531 (internal quotation marks omitted).

### E. The Federal Circuit Restored The Willfulness Requirement And Brought Predictability To The Law In *Seagate*

The Federal Circuit eventually overruled *Underwater Devices* in two stages. In *Knorr-Bremse Systeme Fuer Nutzfahrzeuge GmbH* v. *Dana Corp.*, 383 F.3d 1337, 1347 (Fed. Cir. 2004) (en banc), the court held that "the failure to obtain an exculpatory opinion of counsel shall no longer provide an adverse inference or evidentiary presumption that such an opinion would have been unfavorable."

Then, in *In re Seagate Technology, LLC*, 497 F.3d 1360 (Fed. Cir. 2007) (en banc), the Federal Circuit expressly overruled *Underwater Devices*. Based on the history of § 284 and this Court's precedents, the en banc court held that an "award of enhanced damages requires a showing of willful infringement." *Id.* at 1368.

The en banc court then looked to the "well-established meaning" of willfulness "in the civil context" to provide additional guidance. 497 F.3d at 1370. In particular, the Federal Circuit focused on this Court's decision in *Safeco Insurance Co. of America* v. *Burr*, 551 U.S. 47 (2007), which "addressed the meaning of willfulness as a statutory condition of civil liability for punitive damages." *Seagate*, 497 F.3d at 1370. *Seagate* noted that "the general understanding of willfulness in the civil context ... requires at least a showing of objective recklessness." *Id.* at 1371. This Court's decision in *Safeco* had emphasized that "[w]hile 'the term recklessness is not self-defining,' the common law has generally understood it in the sphere of civil liability as conduct violating an objective standard." *Safeco*, 551 U.S. at 68. Critically, *Safeco* had also rejected the argument that subjective bad faith was sufficient to es-

tablish willfulness in the absence of objectively unreasonable conduct:

> To the extent that [plaintiffs] argue that evidence of subjective bad faith can support a willfulness finding even when the company's reading of the statute is objectively reasonable, their argument is unsound. Where, as here, the statutory text and relevant court and agency guidance allow for more than one reasonable interpretation, it would defy history and current thinking to treat a defendant who merely adopts one such interpretation as a knowing or reckless violator. Congress could not have intended such a result for those who followed an interpretation that could reasonably have found support in the courts, whatever their subjective intent may have been.

*Id.* at 70 n.20.

Based on *Safeco* and the authority it cited, the Federal Circuit articulated a two-part test to determine eligibility for enhanced damages: First, "to establish willful infringement, a patentee must show by clear and convincing evidence that the infringer acted despite an objectively high likelihood that its actions constituted infringement of a valid patent." *Seagate*, 497 F.3d at 1371. Second, "the patentee must also demonstrate that this objectively-defined risk (determined by the record developed in the infringement proceeding) was either known or so obvious that it should have been known to the accused infringer." *Id.*

Far from lacking grounding in the statute's "history" or "purposes," Stryker Br. 45, the Federal Circuit's holding in *Seagate* restated the 150-year-old precept of patent law that willfulness is a prerequisite for en-

hanced damages. And it articulated a predictable standard for making that determination based on settled precedent and principles. *See infra* pp. 34-51.

### F. Congress Retained The *Seagate* Standard When It Reenacted § 284 In The Leahy-Smith America Invents Act Of 2011

Any doubt about the *Seagate* test was dispelled in Congress's most recent major patent legislation. The text of the Leahy-Smith America Invents Act expressly references willfulness, providing that the failure to "obtain the advice of counsel with respect to any alleged infringed patent ... may not be used to prove that the accused infringer *willfully* infringed." 35 U.S.C. § 298 (emphasis added). This provision would make little sense if Congress did not envision willfulness as a threshold requirement for enhanced damages, since willfulness does not figure into the statute in any other way.

More broadly, the statutory history makes clear that Congress was aware of the governing *Seagate* test and made a deliberate decision to retain it. In an early iteration of the AIA in 2009, the Senate Judiciary Committee supported a proposal that would have codified a test similar to—but more rigid than—*Seagate*. *See* S. Rep. No. 111-18, at 94-95 (2009). The proposed language would have limited district court discretion to determine whether a particular infringer had acted in an objectively and subjectively unreasonable way to a series of enumerated circumstances. *Id.* This new test was ultimately abandoned and § 284 was reenacted with almost identical wording as appeared in the 1952 Patent Act, save a minor, technical amendment unrelated to enhanced damages. *See* Pub. L. No. 112-29, § 20(j)(1), 125 Stat. 284, 335 (2011). As Senator Kyl ex-

plained on the Senate floor, "the present bill ... makes no changes to the standard for awards of treble damages. ... By dropping the 2009 bill's restrictions on treble-damages awards, the present bill preserves these awards' role as a meaningful deterrent to reckless or wanton conduct." 157 Cong. Rec. 3427 (2011).

"Congress is presumed to be aware of a[] ... judicial interpretation of a statute and to adopt that interpretation when it re-enacts a statute without change." *Lorillard* v. *Pons*, 434 U.S. 575, 580 (1978). Even without that presumption, the legislative history makes clear that, when considering the AIA, multiple members of Congress recognized that recent Federal Circuit decisions—including *Seagate*—had addressed many of their concerns about patent damages and that reform in that area was not necessary.

For example, the House Committee on the Judiciary's Report on the AIA explained that the move "to modernize our patent laws has found expression in the courts .... Recent decisions by the Federal Circuit reflect a ... trend in response to the[] concerns" that "questionable patents are too easily obtained and are too difficult to challenge." H.R. Rep. No. 112-98, pt. 1, at 39 (2011). To support this point, the Report cited *Seagate* for the proposition that "willful infringement requires at least a demonstration of objectively reckless behavior." *Id.* at 39 n.9.

Several Senators made similar statements. For example, Senator Bennet explained on the Senate floor that "[t]he Federal Circuit Court of Appeals has made significant progress on damages and venue issues. The courts are moving in the right direction, and I believe it is wiser to allow this process to run its course than to add a new layer of laws that could only serve to confuse

patent litigants." 157 Cong. Rec. 2859 (2011). Relatedly, Senator Leahy emphasized that "[w]hen we began the patent reform debate [in 2005], there was ... a significant concern that costs and uncertainty associated with patent litigation had been escalating .... Fortunately, the courts have made great strides in addressing this issue, and there is general consensus that legislation need not and, in fact, should not affect the law of damages as a result." *Id.* at 3401; *see also id.* at 2857 (Senator Leahy noting that "[t]he courts have been making good progress in developing the law ... and I do not believe patent reform should interfere with this progress ... on damages").

*Seagate* was also favorably discussed in two different hearings of the House Committee on the Judiciary related to the AIA. During a hearing focused on recent patent case law, multiple witnesses testified that *Seagate* had resolved the problems created by *Underwater Devices*.[4] And at an earlier, more general hearing, Members of Congress were informed that "legislation pertaining to willfulness is ... unnecessary" because "the Federal Circuit has clarified the standard of

---

[4] *See Review of Recent Judicial Decisions on Patent Law: Hearing Before H. Subcomm. on Intellectual Prop., Competition, & the Internet*, 112th Cong. 14, 48, 57 (2011) (testimony of Andrew J. Pincus, Mayer Brown LLP) ("The low standard for proof of willfulness, which results in the imposition of multiple damages ... which was ... the subject of a lot of the Committee's deliberations, w[as] overturned by the Federal Circuit in the ... *Seagate* decision[]."); *id.* 31-32 (testimony of Dennis Crouch, Assoc. Prof. of Law, Univ. of Missouri) ("[D]ecisions on the particular issues have gone the way that the legislation was headed .... [W]ith enhanced damages for willful infringement ... the courts limited the scope of that....").

willful infringement" in *Seagate*.[5] In both hearings, committee leadership recognized that the courts had already addressed many of the legislature's concerns regarding willfulness. For example, Representative Conyers, the ranking member of the House Judiciary Committee, explained that "the courts have helped us ... in ferreting out a lot of issues that we can take mostly off the table," including "willfulness." *See Recent Judicial Decisions Hearing*, *supra* n.4, at 3. Similarly, Representative Goodlatte, chair of the Subcommittee on Intellectual Property, Competition, and the Internet, stated that "[s]ince we began debating comprehensive patent reforms over half a decade ago, the Federal courts have issued numerous opinions that touch on some of the very reforms we have been working on, including ... willfulness." *Crossing the Finish Line Hearing*, *supra* n.5, at 1.

Stryker's only response to this substantial legislative history (Br. 53-54; *see also* U.S. Br. 27 n.21) is its observation that the Senate declined to enact the proposed amendment to the AIA that contained a more rigid version of the *Seagate* test. But the very document Stryker cites explains that opposition to that amendment sprang from the fact that "the new text does not appear to fully assimilate the teachings of *Seagate*" and would, *inter alia*, return the country "to the pre-*Seagate* world of inquiries into the infringer's subjective intent and the cottage industry of opinion counsel." S. Rep. No. 111-18, at 60 (minority views of Sens. Kyl, Feingold, and Coburn).

---

[5] *Crossing the Finish Line on Patent Reform: Hearing Before the H. Subcomm. on Intellectual Prop., Competition, & the Internet*, 112th Cong. 18 (2011) (testimony of Carl Horton, Chief IP Counsel, General Electric).

In sum, the courts and Congress have long understood an award of enhanced patent damages to require a threshold showing of willfulness, and Congress incorporated that settled meaning by enacting and reenacting § 284.

## II. STRYKER'S AND THE GOVERNMENT'S ARGUMENTS FOR ABANDONING *SEAGATE* ARE UNAVAILING

### A. *Octane* And *Highmark* Do Not Control This Case

Stryker's argument for abandoning *Seagate* relies heavily on *Octane Fitness, LLC* v. *ICON Health & Fitness, Inc.*, 134 S. Ct. 1749 (2014), and *Highmark Inc.* v. *Allcare Health Management Systems, Inc.*, 134 S. Ct. 1744 (2014). Stryker Br. 15-26. Those decisions laid out, respectively, the appropriate test and standard of review for determinations under 35 U.S.C. § 285, a fee-shifting statute that awards attorneys' fees to a prevailing party in "exceptional cases." That analysis cannot be applied to § 284 for several reasons.

*First*, Congress enacted § 284 against the backdrop of a longstanding willfulness requirement for enhanced damages and later reenacted it in the AIA with specific knowledge of the *Seagate* decision. By contrast, the attorneys' fees provision in *Octane* had no comparable historical backdrop that would compel a threshold enhanced culpability requirement. Compared to § 284, § 285 is a relatively young statute; its earliest incarnation dates only to 1946. *See Octane*, 134 S. Ct. at 1753. Until then, there had been no statutory mechanism for awarding attorneys' fees to a prevailing party in a patent infringement case. *Id.* Congress amended § 285 six years later to provide that attorneys' fees could only be awarded "'in exceptional cases,'" but this Court has explained that the amendment was "for purposes of

clarification only." *General Motors Corp.* v. *Devex Corp.*, 461 U.S. 648, 653 n.8 (1983). The contrast between the settled and longstanding jurisprudence governing enhanced damages and the absence of a comparable history for attorneys' fees distinguishes *Octane* and strongly supports maintaining the willfulness requirement that was well established when Congress enacted and reenacted § 284. *See supra* pp. 13-18, 24-29.

This distinction also answers Stryker's reliance (at 19-20) on *General Motors*. That case dealt with the prejudgment interest provision of § 284, not the enhanced damages provision. Like § 285, the prejudgment interest provision was first added in 1946 and recodified in 1952. *General Motors*, 461 U.S. at 653. Because the prejudgment interest provision had only recently been enacted, this Court made clear that there was no judicial gloss to take into account. *Id.* ("This is not a case in which Congress has reenacted statutory language that the courts had interpreted in a particular way.").

*Second*, the punitive purpose of § 284's enhanced damages provision fundamentally distinguishes it from § 285, which allows attorneys' fees to be awarded as compensation, not punishment. Enhanced damages are clearly a form of punitive damages, as this Court recognized over 150 years ago in *Seymour*. 57 U.S. (16 How.) at 489 (a district court's decision to "trebl[e] the actual damages found by the jury" is an exercise of the court's "power to inflict vindictive or punitive damages"). More recently, this Court has reaffirmed that § 284's enhanced damages provision is fundamentally "punitive." *See, e.g.*, *Florida Prepaid*, 527 U.S. at 648 n.11 (noting "the remedies available to plaintiffs in infringement actions, *which include punitive damages* and attorneys' fees, see 35 U.S.C. §§ 284, 285" (empha-

sis added)); *see also Exxon Shipping Co.* v. *Baker*, 554 U.S. 471, 506-507 (2008) (listing § 284 as an example of a federal statute that "peg[s] punitive to compensatory damages using a ... maximum multiple"); *Aro*, 377 U.S. at 508 (§ 284's "trebling provision" provides for "punitive ... damages"). Numerous courts of appeals have reached the same conclusion. *E.g.*, *Sensonics, Inc.* v. *Aerosonic Corp.*, 81 F.3d 1566, 1574 (Fed. Cir. 1996) ("Section 284['s] ... enhanced damages are punitive, not compensatory."); *Eltra Corp.* 599 F.2d at 757 (describing § 284 damages as "an increased, punitive award"); *Union Carbide*, 282 F.2d at 673 (describing enhanced damages under § 284 as "exemplary, sometimes referred to as punitive, damages").

The opposite is true of attorneys' fees under § 285, which are intended to compensate the prevailing party. *See, e.g.*, *Knorr-Bremse*, 383 F.3d at 1347; IPO Br. 5; AIPLA Br. 23-24. While enhanced damages are intended to be "vindictive," focusing on the culpability of the infringer, *see Seymour*, 57 U.S. (16 How.) at 489, a fee award under § 285 ensures that the "injured party is to be placed, as near as may be, in the situation he would have occupied if the wrong had not been committed," *Mathis* v. *Spears*, 857 F.2d 749, 753 (Fed. Cir. 1988).[6]

---

[6] The punitive nature of § 284 also helps explain why the automatic trebling provisions of statutes like the Racketeer Influenced and Corrupt Organizations Act (RICO), 18 U.S.C. § 1964, and the Clayton Act, 15 U.S.C. § 15(a), have no relevance here. Not only do those statutes generally require intentional and substantial misconduct before liability can be found (in contrast to patent infringement's strict liability standard), but "the carrot of treble damages" is intended primarily to encourage private enforcement. *Agency Holding Corp.* v. *Malley-Duff & Assocs.*, 483 U.S. 143, 151 (1987); *see also* U.S. Br. 17 n.14 (distinguishing stat-

Stryker's suggestion (at 18) that enhanced damages might be as freely or even more freely available than attorneys' fees overlooks this fundamental difference in purpose. Punitive enhanced damages are appropriately reserved for the rare circumstances in which potentially massive baseline damages, attorneys' fees, and injunctive relief are insufficient to deter objectively unreasonable and blameworthy misconduct. *Cf. State Farm Mut. Auto. Ins.* v. *Campbell*, 538 U.S. 408, 419 (2003) ("[P]unitive damages should only be awarded if the defendant's culpability, after having paid compensatory damages, is so reprehensible as to warrant the imposition of further sanctions to achieve punishment or deterrence.").

*Third*, § 284 differs from § 285 in that § 285's fees provision is even-handed: it can benefit either the patentee or the defendant depending on which is the prevailing party. *See Raylon, LLC* v. *Complus Data Innovations, Inc.*, 700 F.3d 1361, 1372-1373 (Fed. Cir. 2012). In contrast, § 284 permits treble damages to be awarded only in the patentee's favor, and thus provides patent plaintiffs—often non-practicing entities—with tremendous, one-sided leverage. Askeladden Br. 16-19; Public Knowledge Br. 11-13.

*Fourth*, the test for attorneys' fees overruled in *Octane* and *Highmark*—while facially similar to the *Seagate* test—sprang from a fundamentally different doctrine. As Stryker acknowledges (at 16), the now-defunct § 285 test derived from the "sham" litigation

---

utes that "mandate an award of treble damages in every case where the plaintiff establishes a violation of the relevant law" because Congress "inten[ded]" the Patent Act "to reserve enhanced damages for particularly egregious cases in which the defendant's conduct especially deserves punishment").

exception to *Noerr-Pennington* antitrust immunity. *Brooks Furniture Mfg., Inc.* v. *Dutailier Int'l, Inc.*, 393 F.3d 1378, 1381 (Fed. Cir. 2005) (citing *Professional Real Estate Investors* v. *Columbia Pictures Indus.*, 508 U.S. 49, 60-61 (1993) (*PRE*)); *Octane*, 134 S. Ct. at 1757. In contrast, the *Seagate* test rests soundly on this Court's civil remedies jurisprudence. *See infra* pp. 34-44.[7]

This Court should decline Stryker's invitation to extend *Octane* and *Highmark* to the very different statute and policies that underlie § 284's enhanced damages provision.

### B. The Objective Prong Of The *Seagate* Test Is Consistent With This Court's Jurisprudence And The Statute's Purposes

As a fallback to its general attack on any fixed standard of eligibility for enhanced damages, Stryker takes aim at the objective component of willfulness, which requires proof that the defendant acted despite an objectively high likelihood that its conduct infringed a valid patent. *See Seagate*, 497 F.3d at 1371. Contrary to Stryker's argument, the objective requirement is firmly grounded in this Court's precedent and the Patent Act's fundamental purpose of encouraging innovation while continuing to permit competition.

1. This Court's case law supports *Seagate*'s conclusion that willfulness requires "at least a showing of

---

[7] *Seagate* itself does not cite *PRE*. While a later Federal Circuit decision interpreting § 284 did reference *PRE*, it did so only as part of an analogy listing multiple doctrines where an objective inquiry is treated as a legal question. *See Bard Peripheral Vascular, Inc.* v. *W.L. Gore & Assocs.*, 682 F.3d 1003, 1008 (Fed. Cir. 2012).

... recklessness," *Seagate*, 497 F.3d at 1371, which requires "conduct violating an objective standard," *Safeco*, 551 U.S. at 68; *infra* pp. 37-39. This Court has made clear that civil liability premised on willfulness is shown where an actor "either knew or showed reckless disregard for the matter of whether its conduct was prohibited by the [relevant] statute." *McLaughlin* v. *Richland Shoe Co.*, 486 U.S. 128, 133 (1988). In other words, "where willfulness is a ... condition of civil liability," this Court has generally understood it "to cover not only knowing violations of a standard, but reckless ones as well." *Safeco*, 551 U.S. at 57; *Trans World Airlines, Inc.* v. *Thurston*, 469 U.S. 111, 126 (1985) (adopting a "reckless disregard" minimum standard for willfulness). This rule is drawn from "common law usage, which treated actions in 'reckless disregard' of the law as 'willful' violations." *Safeco*, 551 U.S. at 57 (citing *Prosser and Keeton* § 34, at 212). Negligence or unreasonable behavior is not sufficient for a finding of willfulness. *McLaughlin*, 486 U.S. at 133.

The recklessness requirement has been applied to a wide range of punitive damages regimes. For example, the courts of appeals have repeatedly held that enhanced copyright damages may be awarded only after a showing of, at a minimum, reckless infringement. *See, e.g.*, *Yellow Pages Photos, Inc.* v. *Ziplocal, LP*, 795 F.3d 1255, 1271 (11th Cir. 2015); *Graper* v. *Mid-Continent Cas. Co.*, 756 F.3d 388, 394 (5th Cir. 2014); *Louis Vuitton Malletier, S.A.* v. *Akanoc Sols., Inc.*, 658 F.3d 936, 944 (9th Cir. 2011); *Island Software & Computer Serv., Inc.* v. *Microsoft Corp.*, 413 F.3d 257, 263 (2d Cir. 2005); *Lyons P'ship, L.P.* v. *Morris Costumes, Inc.*, 243 F.3d 789, 799 (4th Cir. 2001); *RCA/Ariola Int'l, Inc.* v. *Thomas & Grayston Co.*, 845 F.2d 773, 779 (8th Cir. 1988). Several of these courts drew their

standards for willfulness directly from *Safeco*, just as the Federal Circuit did in *Seagate*. *See, e.g.*, *Yellow Pages Photos*, 795 F.3d at 1271-1272; *Graper*, 756 F.3d at 394-395; *Seagate*, 497 F.3d at 1370-1371.

Similarly, this Court has held that a threshold showing of recklessness is required before punitive damages may be awarded for violations of the Fair Credit Reporting Act ("FCRA"), *Safeco*, 551 U.S. at 52, 57-58; the Age Discrimination in Employment Act, *Thurston*, 469 U.S. at 125-127; and 42 U.S.C. § 1983, *Smith* v. *Wade*, 461 U.S. 30, 51 (1983).

Stryker has no good response to this case law. Stryker cites *McLaughlin* (at 36) for the proposition that a district court ought to consider whether a defendant's conduct was willful or "more than negligent" merely "[a]s part of th[e] weighing" of various factors to determine "the wrongfulness of the defendant's conduct." But *McLaughlin* does not treat recklessness as a mere "aggravating factor" (Stryker Br. 36)—it requires recklessness as an *element* of a finding of willfulness. *McLaughlin*, 486 U.S. at 133.

Stryker also claims (at 22) that enhanced damages may be imposed in the copyright context whenever it is deemed "just" by the district court. But the two cases it cites refer to the *amount* of *statutory* damages imposed, not to the threshold question whether *enhanced* damages were *available*. *See Island Software*, 413 F.3d at 265 (noting "the wide discretion the Copyright Act affords the trial court *in setting the amount* of statutory damages" (emphasis added)); *Nintendo of Am., Inc.* v. *Dragon Pac. Int'l*, 40 F.3d 1007, 1010 (9th Cir. 1994) (similar). *Compare* 17 U.S.C. § 504(c)(1) ("[T]he copyright owner may elect ... to recover ... an award of statutory damages ... in a sum of not less than $750 or

more than $30,000 *as the court considers just.*" (emphasis added)), *with id.* § 504(c)(2) ("In a case *where ... the court finds[] that infringement was committed willfully*, the court in its discretion may increase the award of statutory damages to a sum of no more than $150,000." (emphasis added)).

Stryker also cites trademark law as a regime that does not require willfulness to award enhanced damages. But as Stryker concedes (at 21 & n.1), the purpose of the Lanham Act's enhanced damages provision is expressly compensatory. *See* 15 U.S.C. § 1117(a) ("[T]he court may enter judgment, according to the circumstances of the case, for any sum above the amount found as actual damages, not exceeding three times such amount. ... Such sum ... shall constitute compensation and not a penalty.").

2. Given that, at a minimum, a finding of recklessness is required to establish willfulness, it follows from settled precedent that the purported infringer's conduct must be viewed in the first instance through an objective lens. This Court has made clear that recklessness "in the sphere of civil liability [is generally] conduct violating an objective standard." *Safeco*, 551 U.S. at 68. That objective standard is satisfied where a defendant engages in "action entailing 'an unjustifiably high risk of harm that is either known or so obvious that it should be known.'" *Id.* This rule is well-established in this Court's case law and the common law. *See Farmer* v. *Brennan*, 511 U.S. 825, 836-837 (1994) ("civil-law recklessness" is an "objective test"); *Restatement (Second) of Torts* § 500 (1965) (reckless disregard when individual acts "knowing or having reason to know of facts which would lead a reasonable man to realize, not only that his conduct creates an unreasonable risk ... but also that such risk is substantially

greater than that which is necessary to make his conduct negligent"); *Prosser and Keeton* § 34, at 213 (objective standard must be applied in recklessness analysis); *see also* IPO Br. 4.

In *Safeco*, this Court explained that an entity subject to a statute "does not act in reckless disregard of it unless the action is not only a violation under a reasonable reading of the statute's terms, but shows that the company ran a risk of violating the law substantially greater than the risk associated with a reading that was merely careless." 551 U.S. at 69. Thus, even though this Court "disagree[d] with Safeco's analysis" of the statute, the Court concluded that punitive damages were inappropriate because Safeco's interpretation "ha[d] a foundation in the statutory text ... and a sufficiently convincing justification." *Id.* at 69-70.

The government (at 27) tries to distinguish *Safeco* based on its statement that willfulness has "'many meanings whose construction is often dependent on the context in which it appears.'" *Safeco*, 551 U.S. at 57. But regardless of what the term means in other contexts such as criminal law, the very sentence the government quotes makes clear that *Safeco* was defining willfulness in the context relevant here: "civil liability." *Id.*

The government also contends (at 28) that willfulness can be established by proof of "knowing misconduct." *See Safeco*, 551 U.S. at 71 (referring to "knowing violations" and "reckless ones as well"). If the government means to suggest that a subjective standard would satisfy *Safeco*, it is mistaken for reasons addressed below. In any event, that is not how Stryker presented its case. The jury was instructed that "[w]illfulness focuses on whether Zimmer acted reck-

lessly," JA462, and that the subjective component of the recklessness test could be met if Zimmer "should have known that its actions constituted an unjustifiably high risk of infringement of a valid patent," JA463. Stryker likewise argued in its closing statement that Zimmer "acted recklessly. That's what willful infringement is." Dist. Ct. Dkt. 389, at 86. Accordingly, the only question in this case is whether, when a patentee seeks enhanced damages under a *recklessness* theory, such a finding is precluded by objectively reasonable defenses that raise substantial questions of invalidity or noninfringement. Under *Safeco*, the answer is clearly "yes."

At any rate, the government is wrong to the extent it seeks to open the door to a subjective "knowing misconduct" test in future cases. *Safeco* (and, by extension, *Seagate*) subsumed the issue of knowledge within a single test examining whether "'an unjustifiably high risk of harm'" was "'either known or so obvious that it should have been known.'" *Safeco*, 551 U.S. at 68 (quoting *Farmer*, 511 U.S. at 836). That test permits liability based on either knowledge or reckless disregard, but in both instances requires at least a "high risk of harm, *objectively assessed*." *Id.* at 69 (quoting *Restatement (Second) of Torts* § 500 (1965)) (emphasis added).

Nowhere did *Safeco* hold that subjective intent alone could support civil liability for willfulness or wantonness in the absence of this objective analysis. To the contrary, *Safeco* expressly rejected as "unsound" the argument that it should "take[] into account" "evidence of subjective bad faith ... even when the company's reading of the statute is objectively reasonable." 551 U.S. at 70 n.20. This Court explained that where "more than one reasonable" analysis is possible, "Congress

could not have intended" to inflict punitive damages "for those who followed [a view] that could reasonably have found support in the courts, whatever their subjective intent may have been." *Id.*; *accord Hammer* v. *Sam's East, Inc.*, 754 F.3d 492, 502 (8th Cir. 2014) ("[T]he analytical framework set forth in *Safeco*" provides that "[w]hen a party has [acted] in an objectively reasonable manner, we need not consider facts relating to the party's subjective intent in assessing willfulness."); *Levine* v. *World Fin. Network Nat'l Bank*, 554 F.3d 1314, 1319 (11th Cir. 2009) ("*Safeco* makes clear that evidence of subjective bad faith cannot support 'a willfulness finding'" if the defendant acted in an objectively reasonable manner).

More generally, this Court has approved of objective tests because of their predictability and reduction of unnecessary litigation. For example, in *Harlow* v. *Fitzgerald*, 457 U.S. 800, 816-817 (1982), this Court rejected a subjective test for qualified immunity of government officials, noting the various and "substantial costs that attend the litigation of the subjective good faith of government officials," including "broad ranging discovery" into the motivations of officials serving discretionary functions. Replacing the subjective test with an objective "known or should have known" standard "avoid[ed] excessive disruption" and "permit[ted] the resolution of many insubstantial claims on summary judgment." *Id.* at 818. Similarly, this Court explained just last Term that the objective component of a recklessness test was essential because it was "workable" and could be uniformly applied. *Kingsley* v. *Hendrickson*, 135 S. Ct. 2466, 2474 (2015).

*Safeco*'s objective analysis has been applied by the courts of appeals in a wide variety of legal contexts. For example, the D.C. Circuit explained that "reckless

disregard" under the False Claims Act requires proof that the defendant lacked an objectively reasonable interpretation of the Act. *See United States ex rel. Purcell* v. *MWI Corp.*, 807 F.3d 281, 290 (D.C. Cir. 2015) ("[S]ubjective intent—including bad faith—is irrelevant when a defendant seeks to defeat a finding of knowledge based on its reasonable interpretation...."). Similarly, the objective reasonableness test has been used for assessing liability under the Federal Trade Commission Act. *FTC* v. *Network Servs. Depot, Inc.*, 617 F.3d 1127, 1140 n.12 (9th Cir. 2010) ("reckless disregard" is "generally understood ... in the sphere of civil liability as conduct violating an objective standard"). *Safeco* has also been cited as the relevant standard for assessing recklessness in several other statutory schemes. *See, e.g.*, *Fryer* v. *A.S.A.P. Fire & Safety Corp.*, 658 F.3d 85, 91 (1st Cir. 2011) (Uniformed Services Employment and Reemployment Rights Act); *General Store, Inc.* v. *Van Loan*, 560 F.3d 920, 923-924 (9th Cir. 2009) (Gun Control Act). And numerous courts of appeals have held that a finding of recklessness under the Private Securities Litigation Reform Act requires proof of objective and subjective misconduct. *E.g.*, *City of Dearborn Heights Act 345 Police & Fire Retirement Sys.* v. *Waters Corp.*, 632 F.3d 751, 758 & n.3 (1st Cir. 2011) (citing cases from the Seventh and Ninth Circuits that "discuss[] the two part—objective and subjective—test for scienter").

Following *Safeco*, the Federal Circuit held that "to establish willful infringement, a patentee must show by clear and convincing evidence that the infringer acted despite an objectively high likelihood that its actions constituted infringement of a valid patent." *Seagate*, 497 F.3d at 1371. That objectively high likelihood is determined by assessing whether the defendant present-

ed objectively reasonable noninfringement or invalidity defenses. *Bard Peripheral Vascular, Inc.* v. *W.L. Gore & Assocs.*, 682 F.3d 1003, 1005-1006 (Fed. Cir. 2012).

Despite Stryker's and the government's assertions, this does not mean that a party can avoid enhanced damages by manufacturing a defense that is merely "minimally plausible," "not frivolous," or "not objectively baseless." Stryker Br. 48, 50; U.S. Br. 25-26.[8] Rather, the purported infringer must show that its defense is "objectively reasonable" and raises a "'substantial question' as to the validity or noninfringement of the patent." *See, e.g.*, *Bard Peripheral Vascular, Inc.* v. *W.L. Gore & Assocs.*, 776 F.3d 837, 844 (Fed. Cir.), *cert. denied*, 136 S. Ct. 189 (2015); *Spine Sols., Inc.* v. *Medtronic Sofamor Danek USA, Inc.*, 620 F.3d 1305, 1319 (Fed. Cir. 2010).

Declining to impose the sanction of treble damages on defendants with objectively reasonable defenses is consistent with the broader premise in punitive damages jurisprudence that an award be based on "reprehensible" conduct that involves a "high degree of culpability." *BMW of N. Am., Inc.* v. *Gore*, 517 U.S. 559, 580 (1996); *see also State Farm*, 538 U.S. at 419 (punitive damages are reserved for "reprehensible" conduct); *Exxon*, 554 U.S. at 493 (punitive damages are reserved for "outrageous" or "deplorable" conduct); *Restatement of Torts* § 902 cmt. B (1938) ("Punitive damages are awarded only for outrageous conduct....").

---

[8] The government's brief misleadingly implies that the Federal Circuit's decision in *Halo* merely concluded that Pulse's defenses were not "objectively baseless." U.S. Br. 25-26 (citing *Halo* Pet. App. 20a). In fact, while the district court used this terminology, the Federal Circuit cited and applied the proper standard just one page later. *Halo* Pet. App. 21a.

Even the government's preferred term—"egregious" conduct—has been interpreted to denote an objective test. *E.g.*, *Martinez Carcamo* v. *Holder*, 713 F.3d 916, 923 (8th Cir. 2013) (whether a federal agent's search was "egregious" for Fourth Amendment purposes does not "turn on a federal agent's personal state of mind"); *NLRB* v. *W.C. McQuaide, Inc.*, 552 F.2d 519, 527 (3d Cir. 1977) (an inquiry into the parties' subjective intent is distinct from an "objective standard" measuring the "egregious[ness]" of conduct).

Regardless of the precise formulation, conduct that is objectively reasonable simply is not "willful," "wanton," or "egregious" conduct warranting the punitive sanction of treble damages over and above the many other remedies afforded to patentees, including strict liability, single damages, injunctive relief, and attorneys' fees.

3. The objective nature of the inquiry mandated by *Safeco* and adopted in *Seagate* obviates the need to determine whether a defense was fully developed in advance of litigation. By definition, an objective standard is unconcerned with the defendant's subjective state of mind at the time of the alleged violation. Thus, when assessing recklessness, whether a defendant subjectively thought of a particular interpretation of the relevant patents when it decided on a course of conduct is not dispositive. Instead, the focus is on whether a reasonable actor in the defendant's shoes would have had an objectively reasonable defense.

The government suggests (at 30) that *Safeco* does not support consideration of objectively reasonable defenses unless they are fully developed before a patent is asserted in litigation, because *Safeco* was allegedly decided "on the understanding that the defendant, at the

time of its unlawful conduct, had actually relied on a reasonable (though erroneous) interpretation." Even were that factually correct—which is not clear, since the opinion contains no finding on the issue—it would not matter. As noted, an objective analysis does not by definition consider subjective factors, such as whether a particular actor formed a specific belief at a particular time. Moreover, *Safeco* did not approach the question as one of "good-faith reliance on legal advice," but instead focused on whether the defendants' "interpretation ... could reasonably have found support in the courts, whatever their subjective intent might have been." 551 U.S. at 70 n.20.

Two unanimous panels of the Third Circuit have concluded that the logic of *Safeco* compels consideration of defenses not fully developed at the time of the relevant conduct when determining objective reasonableness. Both panels held that a "reasonable reading" is a defense to an allegation of willfulness even where the defendant allegedly "'did not actually rely on *any* interpretation'" of the relevant provision and only developed the interpretation after allegedly violating the law. *Long* v. *Tommy Hilfiger U.S.A., Inc.*, 671 F.3d 371, 377 (3d Cir. 2012); *accord Fuges* v. *Southwest Fin. Servs., Ltd.*, 707 F.3d 241, 250-251 (3d Cir. 2012) (*Long* "expressly rejected the argument that a defendant is required to have a pre-litigation [defense] to avail itself of the *Safeco* 'reasonable interpretation' defense."). This conclusion logically followed from the objective nature of the *Safeco* standard. *Long*, 671 F.3d at 377 ("actual knowledge or intent ... is immaterial to the objective reasonableness analysis."); *Fuges*, 707 F.3d at 250 (argument about timing of a defense is "in essence, an assertion about the defendants' intent or subjective bad faith and, as such, [is] 'expressly foreclosed by

*Safeco*"'). The Eleventh Circuit has reached the same result. *See Levine*, 554 F.3d at 1319 (rejecting argument that defendant "recklessly violated the [FCRA] because [defendant's] records prove that [defendant]" believed its actions to be illegal at the time of the violation, where defendant advanced a different and objectively reasonable reading of the statute during litigation). We have identified no court that has disagreed with these cases' reading of *Safeco*; Stryker and the government certainly do not cite any.

### C. The *Seagate* Test Advances The Purposes Of The Patent Act

The *Seagate* test, and its objective prong in particular, serve the Patent Act's goal of incentivizing innovation by balancing the right to exclude against concerns of free competition. *See, e.g., Bonito Boats, Inc.* v. *Thunder Craft Boats, Inc.*, 489 U.S. 141, 146 (1989). Abandoning the objective prong would disserve the public interest in challenging bad patents, encourage abusive patent suits, create pressure to settle meritless claims, encourage forum shopping, and restore many of the problems associated with *Underwater Devices*—all in the service of solving an illusory problem.

#### 1. *Seagate* encourages challenges to bad patents

The *Seagate* test serves the important policy function of encouraging challenges to patents that are questionable or stretched beyond their proper scope. "It is as important to the public that competition should not be repressed by worthless patents, as that the patentee ... should be protected in his monopoly...." *Pope Mfg. Co.* v. *Gormully*, 144 U.S. 224, 234 (1892). Consequently, this Court has taken the "consistent view ... that the

holder of a patent should not be insulated from the assertion of defenses and thus allowed to exact royalties for the use of an idea that is not in fact patentable or that is beyond the scope of the patent monopoly granted." *Blonder-Tongue Labs., Inc.* v. *University of Ill. Found.*, 402 U.S. 313, 349-350 (1971). This approach serves the public interest, as "the public has a paramount interest in seeing that patent monopolies are kept within their legitimate scope." *Medtronic, Inc.* v. *Mirowski Family Ventures, LLC*, 134 S. Ct. 843, 851-852 (2014) (internal quotation marks omitted); *accord* Public Knowledge Br. 23-24.

Protecting defendants who have objectively reasonable defenses from the risk of treble damages helps ensure that companies and individuals accused of infringement—often the only entities "with enough economic incentive to challenge" an aggressive patentee—will not be overly discouraged from standing up to abuses of the system. *See Lear, Inc.* v. *Adkins*, 395 U.S. 653, 670-671 (1969); *accord Blonder-Tongue*, 402 U.S. at 345. Although the defenses may not ultimately succeed, a defendant should not be penalized for advancing reasonable arguments rather than immediately settling a claim, even if the defenses are developed after the patent is asserted. Otherwise, if defendants "are muzzled, the public may continually be required to pay tribute to would-be monopolists without need or justification." *Lear*, 395 U.S. at 670. This is a real hazard because "[t]he risk that a patent will be declared invalid is substantial. Roughly half of all litigated patents are found to be invalid, including some of great commercial significance." Lemley & Shapiro, *Probabilistic Patents*, 19 J. Econ. Persp. 75, 76 (2005); *see also* Love & Ambwani, *Inter Partes Review: An Early Look at the Numbers*, 81 U. Chi. L. Rev. Dialogue 93, 94

(2014) (vast majority of patents subject to *inter partes* review are invalidated).[9]

Allowing defendants to raise their reasonable arguments at trial, even where the arguments were not fully developed at the outset of the allegedly infringing conduct, is also a practical necessity. Given how many patents cover modern, complex technology, it would impose an unreasonable burden on industry to conduct and document a thorough investigation of *every* potentially relevant patent before producing a product. According to one widely cited estimate, there are 250,000 existing patents relevant to smartphone technology. *See* Chien, *Predicting Patent Litigation*, 90 Texas L. Rev. 283, 289 (2011). Another study estimates that it would take the full-time labor of two million attorneys to compare every software-producing firm's products

---

[9] The strong public interest in encouraging challenges to invalid or noninfringed patents distinguishes the government's cited cases (at 29) involving regimes designed to deter misconduct by officers of the law or the courts. *See Kingsley*, 135 S. Ct. at 2473 (reasonableness of police officer's use of force); *Rompilla* v. *Beard*, 545 U.S. 374, 381 (2005) (reasonableness of attorney's representation of client); *Terry* v. *Ohio*, 392 U.S. 1, 21-22 (1968) (reasonableness of stop-and-frisk). Patent law encourages—indeed, depends on—purported infringers challenging the validity and scope of patents, whereas the officer misconduct decisions are not intended to encourage officers to test the bounds of the law. Thus, while such decisions provide general guidance on other aspects of objective tests, they do not determine by when a purported infringer must have developed a reasonable defense.

*Kolstad* v. *American Dental Ass'n*, 527 U.S. 526, 535-538 (1999), which the government cites (at 25), is also inapposite. The regime in *Kolstad* authorized punitive damages only for "a subset of cases involving *intentional discrimination*," which necessarily requires an investigation into a defendant's mental state. *See* 527 U.S. at 534-535 (emphasis added); *id.* at 535 (particular punitive damages provision "focus[es] on the employer's state of mind").

with every software-related patent issued in a given year. *See* Mulligan & Lee, *Scaling the Patent System*, 68 N.Y.U. Ann. Surv. L. 289, 304-305 (2012). In other words, not only would the cost of Stryker's rule be prohibitive, but in some industries compliance may not even be possible. *See also Mayo Collaborative Servs.* v. *Prometheus Labs., Inc.*, 132 S. Ct. 1289, 1305 (2012) (rules that are overly protective of patentees can "requir[e] users to conduct costly and time-consuming searches of existing patents and pending patent applications").

### 2. Abandoning *Seagate*'s objective prong would harm American business

Both Stryker's and the government's proposals to abandon *Seagate* in favor of district court discretion to enhance damages for purely subjective reasons would fuel abuse of the patent system. Such an approach provides no way for a company to effectively assess whether, at some future date, a federal judge will regard its behavior as sufficiently improper to warrant punitive damages. Any innovative company, large or small, that produces a product is at risk of paying enhanced damages based on the post-hoc judgment of a district court. The threat of treble damages awarded based on this unpredictable standard would force companies to settle even marginal claims to avoid the possibility of enormous judgments. *Accord* Public Knowledge Br. 12-13.

Both proposals would also increase the incentive for filing questionable patent suits in the hope of obtaining a substantial windfall. While Stryker speculates (at 53) that the *Seagate* test leads "infringers to roll the dice on litigation," it cites no evidence. By contrast, overturning *Seagate* would unquestionably lead

patentees—even those with weak patents—to roll the dice by filing suit and using the threat of punitive damages to extract undeserved settlements. In this case, for example, the district court awarded Stryker over *$152 million* in enhanced damages alone. *See supra* p. 8.

The prospect of such significant damages is particularly troubling in light of the "industry [that] has developed in which firms use patents not as a basis for producing and selling goods but, instead, primarily for obtaining licensing fees." *eBay Inc.* v. *MercExchange, LLC*, 547 U.S. 388, 396 (2006) (Kennedy, J., concurring); *see also Commil USA, LLC* v. *Cisco Sys., Inc.*, 135 S. Ct. 1920, 1930 (2015) (recognizing that "[s]ome companies may use patents as a sword to go after defendants for money, even when their claims are frivolous," "behavior [that] can impose a 'harmful tax on innovation'"); *id.* at 1932 (Scalia, J., dissenting) (expressing concern regarding a rule that "increases the *in terrorem* power of patent trolls"). Indeed, non-practicing entities now "account for ... a majority of all patent assertions in the country" and they "win both larger judgments and larger settlements than do 'practicing entities.'" Lemley & Melamed, *Missing the Forest for the Trolls*, 113 Colum. L. Rev. 2117, 2119-2120 & nn.13-14 (2013). Both Stryker's and the government's proposals would only magnify this problem.

Abandoning the objective prong would also increase the variability of willfulness judgments among judicial districts, which encourages forum shopping. A recent empirical study indicates that the frequency of willfulness findings varies dramatically by district. For example, the Eastern District of Texas found willfulness in 52.3% of cases where the issue was raised, while the District of Minnesota found willfulness in only

27.3% of cases. *See* Seaman, *Willful Patent Infringement and Enhanced Damages After* In re Seagate, 97 Iowa L. Rev. 417, 450-451 (2012). This trend would undoubtedly worsen were this Court to eliminate the willfulness requirement or even just its objective prong.

Stryker suggests (at 37-39) that district courts can simply use a number of "historically important considerations" to ensure that enhanced damages are awarded only in a limited amount of cases. But Stryker openly concedes (at 39) that the four factors it lists are not exclusive and that, accordingly, courts could consider a constellation of factors in determining whether to award enhanced damages, with no guidance on how to weigh them. *Accord* U.S. Br. 18 (conceding it can identify "'no precise rule or formula' to govern the district court's exercise of discretion ... under Section 284"). That approach would destroy predictability for patent defendants and lead non-practicing entities to forum shop to an even greater extent.

*Seagate*'s objective prong also avoids the difficult choice between devoting enormous resources to the analysis of possible patents that might never be asserted and, as often happened during *the Underwater Devices* era, trying "not to read patents." National Research Council of the National Academies, *A Patent System for the 21st Century* 119 (Merrill et al., eds., 2004). Both choices—exhaustive investigation or willful blindness—are problematic: the first wastes resources and forces routine disclosure of the advice of counsel, while the second undercuts the teaching function of patents. Public Knowledge Br. 9-11. The *Seagate* test avoids this dilemma while appropriately deterring infringement where companies do not have objectively reasonable defenses. *See generally* IPO Br. 4 (discussing benefits of *Seagate* test).

Finally, Stryker's primary policy argument in favor of its desired approach is illusory. Stryker and the government offer no examples of savvy but unethical entrepreneurs making conscious decisions to infringe valid patents, and then relying on trumped-up defenses to avoid treble damages.[10] And no wonder. Compensatory damages and injunctive relief already discourage infringement, and only objectively reasonable defenses provide a shield against treble damages.

Stryker's and the government's proposals are "solution[s] in search of a problem." *Roberts* v. *Sea-Land Servs., Inc.*, 132 S. Ct. 1350, 1358 (2012). Indeed, their proposed "solution[s]" to hypothetical concerns would create very real problems of their own, with no countervailing benefit.

## III. To The Extent The Court Reaches The Questions, The De Novo Standard Of Review And Clear-And-Convincing-Evidence Standard Of Proof Should Be Retained

As a threshold matter, Stryker identifies no reason why this Court need decide the proper appellate standard of review for, and level of evidence needed to establish, willfulness. Neither issue is dispositive of the outcome of this case or the companion case. Here, the Federal Circuit held that the district court's willfulness

---

[10] Stryker's one-sided description of this case ignores Zimmer's objectively reasonable defenses based on the placement of its motor, the male nozzles on its device's handpiece, anticipation by Zimmer's Var-A-Pulse device under Stryker's broad construction of lock assembly, and the obviousness of substituting an electric motor for a pneumatic motor. *Supra* pp. 4-7. Moreover, as noted, Stryker pursued a recklessness theory in this case, allowing the jury to find willfulness under a "should have known" standard without a finding of actual knowledge or intent. *Supra* p. 7.

analysis rested on legal error and thus was incorrect under any standard of review. *Supra* p. 8. In *Halo*, the Federal Circuit merely affirmed the district court's conclusion under *Seagate*'s objective prong that Pulse had not engaged in willful infringement. *Halo* Pet. App. 22a. And in both cases, lowering the standard of proof on factual questions would not matter, because both cases turned on a legal determination of objective reasonableness. "[I]n this area of law as in others the evidentiary standard of proof applies to questions of fact and not to questions of law." *Microsoft Corp.* v. *i4i Ltd. P'ship*, 131 S. Ct. 2238, 2253 (2011) (Breyer, J., concurring).

In any event, the de novo review and clear-and-convincing-evidence standards are correct.

### A. The De Novo Standard Of Review Should Be Retained

The de novo standard of review follows naturally from *Seagate*'s objective standard. Objective reasonableness under *Seagate* is a question of law, *Bard*, 682 F.3d at 1005, just like the *Safeco* objective recklessness test from which it derived. *Van Straaten* v. *Shell Oil Prods. Co.*, 678 F.3d 486, 490-491 (7th Cir. 2012) (Easterbrook, J.); *see also Purcell*, 807 F.3d at 288-289 (determination whether defendant's interpretation of legal obligations was "objectively reasonable" under the False Claims Act is a legal question). Such questions of law are reviewed de novo. *Pierce* v. *Underwood*, 487 U.S. 552, 558 (1988); *see also Scott* v. *Harris*, 550 U.S. 372, 381 & n.8 (2007) (suggesting that the "objective reasonableness" standard for qualified immunity is a question of law); *Ornelas* v. *United States*, 517 U.S. 690, 699 (1996) (reasonable suspicion and probable cause determinations reviewed de novo); *United States*

v. *Nerber*, 222 F.3d 597, 599 (9th Cir. 2000) ("Whether a citizen's expectation of privacy [under the Fourth Amendment] was objectively reasonable is a question of law reviewed de novo.").

Even without these settled principles, numerous considerations would support de novo review. First, the punitive nature of enhanced damages weighs in favor of searching appellate review. *See Jones* v. *United Parcel Serv., Inc.*, 674 F.3d 1187, 1204 (10th Cir. 2012) (legal errors in "punitive damage awards must [be reviewed] under a de novo standard"); *see also Pacific Mut. Life Ins.* v. *Haslip*, 499 U.S. 1, 21 (1991) ("[A]ppellate review makes certain that the punitive damages are reasonable in their amount and rational in light of their purpose to punish what has occurred and to deter its repetition."). *Second*, "as a matter of the sound administration of justice," the Federal Circuit, which encounters hundreds of patent cases each year, is "better positioned" to consider the reasonableness of a patent defense than district court judges who might preside over patent trials only occasionally. *See Pierce*, 487 U.S. at 559-560. *Third*, the "substantial consequences" of finding willfulness—here, a penalty of over $152 million—counsel in favor of "more intensive[]" review. *Id.* at 563; *cf. id.* (abuse of discretion review appropriate where "[t]he median award [under the relevant statute] has been less than $3,000").

Stryker's brief discussion of historical practice (at 24, 34-35) does not support abandoning de novo review. Modern standards of review had largely not been articulated when Congress enacted § 284. *See* Peters, *The Meaning, Measure, and Misuse of Standards of Review*, 13 Lewis & Clark L. Rev. 233, 238 (2009). In practice if not in name, however, pre-1952 court of appeals decisions commonly applied a searching form of

review, overturning enhanced damages awards not justified by a proper finding of willfulness. *See, e.g., Goodyear Tire*, 95 F.2d at 986 (reversing enhancement decision because willfulness was not raised in the pleadings and the district court's determination lacked evidentiary support); *Rockwood*, 37 F.2d at 66 (reversing enhanced damages award because the infringement was not "wanton and deliberate").

Moreover, the cases that Stryker cites do not actually apply an abuse of discretion standard to a district court's *threshold* finding of willfulness. Contrary to Stryker's suggestion (at 24), *Birdsall* v. *Coolidge*, 93 U.S. 64 (1876), says nothing about the appellate standard of review. Rather, the issue was whether the judge or the jury should have the power ("discretion") to award enhanced damages at all. 93 U.S. at 70. And *Topliff* v. *Topliff*, 145 U.S. 156 (1892), did not address the proper standard for reviewing a court's first-step determination of willful infringement, but rather the second-step question whether to affirm the district court's decision not to award damages despite a threshold showing of willfulness. *Id.* at 174. *Topliff*'s application of abuse of discretion review to *that* separate question is no different from Federal Circuit practice today. *Compare id., with Funai Elec. Co.* v. *Daewoo Elecs. Corp.*, 616 F.3d 1357, 1377 (Fed. Cir. 2010).

Stryker's other cited decisions (at 34-35) are unpersuasive for similar reasons. One case clearly falls into the same category as *Topliff*: it applied abuse-of-discretion review not to an initial threshold determination of willfulness, but rather to the district court's second-step decision that (having found willfulness) the particular circumstances of the case warranted enhancement. *See Overman Cushion Tire Co.* v. *Goodyear Tire & Rubber Co.*, 66 F.2d 361, 361 (2d Cir. 1933).

The remaining cases are simply opaque as to whether the court was reviewing the threshold willfulness determination or the district court's determination whether the particular circumstances of the case warranted enhancement.

Finally, Stryker contends that *Highmark*, which adopted an abuse-of-discretion test, should apply to the willfulness determination. Stryker Br. 24-25; *accord* U.S. Br. 33. However, *Highmark* interpreted § 285, and is inapposite for the reasons discussed above. *Supra* pp. 30-34.

### B. The Clear-And-Convincing-Evidence Standard Should Be Retained

The clear-and-convincing-evidence requirement for enhanced damages has been well-established for decades. *E.g.*, *Shatterproof Glass Corp.* v. *Libbey-Owens Ford Co.*, 758 F.2d 613, 628 (Fed. Cir. 1985). Congress thus implicitly reaffirmed the standard when it reenacted § 284 in the AIA. *See Microsoft*, 131 S. Ct. at 2246 (clear-and-convincing-evidence standard for patent invalidity incorporated into statute even though "§ 282 fails to reiterate it expressly" because courts "*presume* that Congress intended to incorporate [settled judicial interpretations] unless the statute otherwise dictates").

The clear-and-convincing-evidence standard serves the important purpose of ensuring that treble damages will be meted out only for truly reprehensible conduct. *See Cooper Indus., Inc.* v. *Leatherman Tool Grp., Inc.*, 532 U.S. 424, 432 (2001) (punitive damages "operate as 'private fines' intended to punish the defendant and to deter future wrongdoing"). The majority of States thus require clear-and-convincing proof of willful or deliber-

ate conduct for punitive damages in tort, a practice this Court has endorsed. *See Pacific Mut.*, 499 U.S. at 23 n.11 (stating that "[t]here is much to be said in favor of a State's requiring, as many do ... a standard of 'clear and convincing evidence'" for punitive damages (citation omitted)). Academic commentary is to the same effect. *E.g.*, Markel, *How Should Punitive Damages Work?*, 157 U. Pa. L. Rev. 1383, 1437 (2009) (clear-and-convincing standard is "consistent with the view that retributive damages are an intermediate sanction that warrant an intermediate evidentiary standard of proof"); Wheeler, *The Constitutional Case for Reforming Punitive Damages Procedures*, 69 Va. L. Rev. 269, 298 (1983) (heightened standard of proof corrects "imbalance between the risk of an erroneous punitive damages judgment adverse to the defendant and the lesser risk of an erroneous judgment adverse to the plaintiff").

Stryker, which spends half a page on the issue (at 23-24), identifies no sound reason for abandoning the longstanding burden of proof. Even without an express textual command, the clear-and-convincing-evidence requirement is appropriate in light of the punitive nature of enhanced damages. *See supra* pp. 31-33. As a fallback, Stryker relies on *Octane* to argue that the preponderance standard is "'generally applicable in civil actions, because it allows both parties to share the risk of error in roughly equal fashion.'" Stryker Br. 16-17; *accord* U.S. Br. 31. But that reasoning counsels *against* a preponderance standard under § 284 where the risks are not "share[d]"; only defendants face any risk from § 284's one-sided, punitive provision. *See supra* p. 33.

## CONCLUSION

The judgment of the court of appeals should be affirmed.

Respectfully submitted.

MARK C. FLEMING
REBECCA A. BACT
WILMER CUTLER PICKERING
HALE AND DORR LLP
60 State Street
Boston, MA 02109

DONALD R. DUNNER
FINNEGAN, HENDERSON,
FARABOW, GARRETT &
DUNNER
901 New York Ave., NW
Washington, DC 20001

SETH P. WAXMAN
*Counsel of Record*
THOMAS G. SAUNDERS
THOMAS G. SPRANKLING
JOHN B. SPRANGERS*
WILMER CUTLER PICKERING
HALE AND DORR LLP
1875 Pennsylvania Ave., NW
Washington, DC 20006
(202) 663-6000
seth.waxman@wilmerhale.com

JASON D. HIRSCH
WILMER CUTLER PICKERING
HALE AND DORR LLP
7 World Trade Center
250 Greenwich Street
New York, NY 10007

JANUARY 2016

* *Admitted to practice in California. Supervised by members of the District of Columbia Bar.*

No. 14-1520

# In the Supreme Court of the United States

STRYKER CORPORATION, ET AL., PETITIONERS

*v.*

ZIMMER, INC., ET AL.

*ON WRIT OF CERTIORARI*
*TO THE UNITED STATES COURT OF APPEALS*
*FOR THE FEDERAL CIRCUIT*

## REPLY BRIEF FOR THE PETITIONERS


SHARON A. HWANG
DEBORAH A. LAUGHTON
STEPHANIE F. SAMZ
MCANDREWS HELD & MALLOY LTD.
500 West Madison Street
Suite 3400
Chicago, IL 60661
(312) 775-8000

GARRARD R. BEENEY
ROBERT J. GIUFFRA, JR.
SULLIVAN & CROMWELL LLP
125 Broad Street
New York, NY 10004
(212) 558-4000

JEFFREY B. WALL
*Counsel of Record*
AUSTIN L. RAYNOR
SULLIVAN & CROMWELL LLP
1700 New York Avenue, N.W.
Suite 700
Washington, DC 20006
(202) 956-7500
wallj@sullcrom.com

## TABLE OF CONTENTS

Page

A. The Federal Circuit has erred in treating willfulness as a strict precondition for enhancement. ..... 1

B. The Federal Circuit has erred in interpreting willfulness. ..... 7

1. The Federal Circuit's current approach was not ratified in the America Invents Act. ..... 9

2. The Federal Circuit's current approach is not drawn from *Safeco*. ..... 12

3. The Federal Circuit's current approach is poor policy. ..... 16

C. The Federal Circuit has erred in its burden of proof and standard of review. ..... 21

Conclusion ..... 23

## TABLE OF AUTHORITIES

Page(s)

Cases

*Bard Peripheral Vascular, Inc.* v. *W.L. Gore & Assocs.*, 682 F.3d 1003 (Fed. Cir. 2012) ..... 10

Cases—Continued:

*Bard Peripheral Vascular, Inc.* v. *W.L. Gore & Assocs., Inc.*,
776 F.3d 837 (Fed. Cir. 2015) ..... 22

*Bruesewitz* v. *Wyeth LLC*,
562 U.S. 223 (2011) ..... 11

*Carnegie Mellon Univ.* v. *Marvell Tech. Grp., Ltd.*,
807 F.3d 1283 (Fed. Cir. 2015) ..... 18

*Cent. Bank of Denver, N.A.* v. *First Interstate Bank of Denver, N.A.*,
511 U.S. 164 (1994) ..... 16

*Clark* v. *Wooster*,
119 U.S. 322 (1886) ..... 5

*Dean* v. *Mason*,
61 U.S. 198 (1857) ..... 4

*Enter. Mfg. Co.* v. *Shakespeare Co.*,
141 F.2d 916 (6th Cir. 1944) ..... 14

*Florida Prepaid Postsecondary Educ. Expense Bd.* v. *College Sav. Bank*,
527 U.S. 627 (1999) ..... 7

*Gen. Motors Corp.* v. *Devex Corp.*,
461 U.S. 648 (1983) ..... 2

*Guyon* v. *Serrell*, 1 Blatchf. 244
(C.C.S.D.N.Y. 1847) ..... 14

*Halo Elecs., Inc.* v. *Pulse Elecs., Inc.*,
769 F.3d 1371 (Fed. Cir. 2014) ..... 10

*Herman & MacLean* v. *Huddleston*,
459 U.S. 375 (1983) ..... 21

*iLOR, LLC* v. *Google, Inc.*,
631 F.3d 1372 (Fed. Cir. 2011) ..... 2, 18

Cases—Continued:

*Minemyer* v. *R-Boc Representatives, Inc.*,
2012 WL 2155240 (N.D. Ill. June 13, 2012) ..... 18

*N.L.R.B.* v. *Bildisco & Bildisco*,
465 U.S. 513 (1984) ..... 6

*Octane Fitness, LLC* v. *ICON Health & Fitness, Inc.*,
134 S. Ct. 1749 (2014) ..... 2, 3, 21

*Russello* v. *United States*,
464 U.S. 16 (1983) ..... 9

*Safeco Ins. Co.* v. *Burr*,
551 U.S. 47 (2007) ..... 12, 13, 14

*Seagate Tech., LLC, In re*
497 F.3d 1360 (Fed. Cir. 2007) ..... 5, 8, 10

*Seymour* v. *McCormick*,
57 U.S. 480 (1853) ..... 4

*Shatterproof Glass Corp.* v. *Libbey-Owens Ford Co.*,
758 F.2d 613 (Fed. Cir. 1985) ..... 21

*Smith* v. *Wade*,
461 U.S. 30 (1983) ..... 16

*TS Tech USA Corp., In re*
551 F.3d 1315 (Fed. Cir. 2008) ..... 20

*Underwater Devices, Inc.* v. *Morrison-Knudsen Co.*,
717 F.2d 1380 (Fed. Cir. 1983) ..... 8

*United States* v. *Illinois Cent. R.R. Co.*,
303 U.S. 239 (1938) ..... 15

*United States* v. *Murdock*,
290 U.S. 389 (1933) ..... 15

Cases—Continued:

*Wilden Pump & Eng'g Co.* v. *Pressed & Welded Products Co.*, 655 F.2d 984 (9th Cir. 1981) ..... 14

*Wilson* v. *Seiter*, 501 U.S. 294 (1991) ..... 22

Statutes

15 U.S.C. 1117(a) ..... 2

17 U.S.C. 504(c)(2) ..... 2

28 U.S.C. 2201 ..... 20

35 U.S.C.
284 ..... 1, 2
285 ..... 2
298 ..... 9, 16

Patent and Plant Variety Protection Remedy Clarification Act, 106 Stat. 4230 (1992) ..... 6

Other Authorities

157 Cong. Rec.
2857 (2011) ..... 10
2859 (2011) ..... 10
3401 (2011) ..... 10

157 Cong. Rec. S1374 (daily ed. Mar. 8, 2011) ..... 12

*Black's Law Dictionary* (8th ed. 2004) ..... 13

H.R. Rep. No. 112-98 (2011) ..... 10

Patent Reform Act of 2007, H.R. 1908, 110th Cong. ..... 11

Patent Reform Act of 2011, S. 23, 112th Cong. ..... 9

Other Authorities—Continued:

Jason A. Rantanen, *An Objective View of Fault in Patent Infringement*, 60 Am. U. L. Rev. 1575 (2011) ..... 14

*Recovery in Patent Infringement Suits: Hearing on H.R. 5231 Before the H. Comm. on Patents*, 79th Cong. 3 (1946) ..... 6

Restatement (Second) of Torts:
Vol. 2 (1965) ..... 13
Vol. 4 (1979) ..... 15

*Review of Recent Judicial Decisions on Patent Law: Hearing Before H. Subcomm. on Intellectual Prop., Competition, & the Internet*, 112th Cong. 14 (2011) ..... 10

S. Rep. No. 111-18 (2009) ..... 11

## REPLY BRIEF FOR THE PETITIONERS

Zimmer basically ignores the text of 35 U.S.C. 284, mentioning it only once (at 19) in its entire brief. And for good reason, because Section 284 does not make willfulness a prerequisite to enhanced damages, much less willfulness as the Federal Circuit understands that requirement. On any plausible conception, the conduct at issue in this case—intentional copying with no contemporaneous, reasonable belief in invalidity—should be subject to enhanced damages. That type of behavior historically was at the core of the enhancement provision. But the Federal Circuit consistently lets such conduct off the hook based on a convoluted doctrine that exculpates any infringer, no matter how culpable, who is able to develop a minimally plausible post hoc defense. Zimmer defends the Federal Circuit's approach on three basic grounds: it has been ratified by Congress, is drawn from this Court's decision in *Safeco*, and is desirable for policy reasons. None of those arguments is correct.

### A. The Federal Circuit Has Erred In Treating Willfulness As A Strict Precondition For Enhancement.

1. The text of Section 284, which provides simply that the district court "may increase the damages up to three times the amount found or assessed," does not require that the court make any particular finding before enhancing damages. Zimmer nevertheless reads Section 284 as a purely "punitive sanction" that

requires "a threshold finding of willful or wanton infringement." Br. 11. Other statutes contain those kinds of limitations: the Copyright Act permits enhancement of damages if the district court finds that the "infringement was committed *willfully*," 17 U.S.C. 504(c)(2) (emphasis added), whereas the Lanham Act omits any willfulness requirement for the enhancement of damages but specifies that the enhancement "shall constitute compensation and not a penalty," 15 U.S.C. 1117(a). If Congress had intended Section 284 to serve only punitive purposes, or to punish only willful infringement, it would have said so.

Zimmer also has no persuasive answer to this Court's reasoning in *General Motors Corp.* v. *Devex Corp.*, 461 U.S. 648 (1983), and *Octane Fitness, LLC* v. *ICON Health & Fitness, Inc.*, 134 S. Ct. 1749 (2014). In both cases, this Court rejected atextual limits or preconditions on discretionary remedies in 35 U.S.C. 284 and 285. Zimmer responds (Br. 33-34) that, although the Federal Circuit's two-part test for willfulness is functionally identical to the two-part test for exceptionalness that this Court set aside in *Octane*, the tests have different doctrinal origins. The Federal Circuit has never thought that relevant; it treats the tests as the same. See, *e.g.*, *iLOR, LLC* v. *Google, Inc.*, 631 F.3d 1372, 1377 (2011). Regardless, it does not matter if the Federal Circuit drew its equivalent tests from two different sources—because neither source is consistent with the statutory text.

Zimmer also argues (Br. 31-32) that enhanced damages are punitive whereas fee awards are compensatory. As explained below, Zimmer's premise is false: enhanced damages can be used to compensate patentees in certain circumstances, just as fee awards can punish litigation misconduct. See *infra*, pp. 4-5;

*Octane*, 134 S. Ct. at 1756. But even if Section 284's enhancement provision were purely punitive, that would only support limiting its application to misconduct greater than ordinary negligence—which is precisely the test that Stryker advocates for punitive enhancements. See U.S. Br. 16-17.

2. Zimmer's primary argument (Br. 13-19, 24-29, 30-31) for dispensing with *General Motors* and *Octane* is that a willfulness prerequisite was settled in the early case law and was implicitly ratified by Congress when it enacted the 1946 and 1952 Patent Acts. But there was no settled willfulness prerequisite for Congress to ratify in either 1946 or 1952, because courts had enhanced damages for reasons other than willful infringement. To be sure, when courts enhanced for punitive reasons, they overwhelmingly did so only to punish conduct that was more than negligent. That limitation, however, provides no basis for *Seagate* and its progeny, because the traditional conception of willfulness focused on the infringer's conduct and state of mind at the time of infringement. See U.S. Br. 25.

a. Beginning with the conversion to discretionary enhancement in 1836 and continuing through the 1952 statutory reorganization, the Patent Act expressly required district courts to enhance "according to the circumstances of the case," without imposing any prerequisite on their exercise of discretion. Stryker Br. 4-5 (quoting 1836 and 1870 Patent Acts). Zimmer correctly acknowledges (Br. 18) that the 1952 revisions were not substantive, and thus the Patent Act should continue to be read as requiring enhancement based on case-specific circumstances.

Consistent with that mandate, from 1836 through at least the 1960s, district courts determined whether to enhance damages by conducting a single weighing

of the aggravating and mitigating circumstances in any particular case. During that 130-year period, Zimmer and its amici do not identify a single case—not even one—in which a district court first examined willfulness and then conducted a separate weighing of other factors. Needless to say, none of the cases employed an approach remotely akin to the Federal Circuit's current three-stage approach (*i.e.*, objective recklessness, then subjective bad faith, followed by discretionary weighing).

b. Zimmer focuses (Br. 13-14) solely on cases in which courts enhanced damages to punish highly culpable infringement. To be sure, that was one very important purpose of enhancement. When a plaintiff claimed that the nature of the defendant's infringement warranted punishment, courts consistently required that the infringement have been more than merely negligent. The question was whether, based on what the defendant knew or should have known at the time of its infringement, it acted with intentional or reckless disregard for the patentee's rights. See Stryker Br. 36, 46, 49.

In nearly all of the earlier cases, the district court's determination on that point was dispositive, for the simple reason that there were no other considerations at issue. The plaintiff did not allege any misconduct other than the infringement, nor claim that its compensatory damages were inadequate absent enhancement. Accordingly, many courts, including this Court, sometimes associated enhanced damages with willful infringement. See, *e.g.*, *Dean* v. *Mason*, 61 U.S. 198, 203 (1857); *Seymour* v. *McCormick*, 57 U.S. 480, 488 (1853). But this Court and others also recognized that, to the extent additional considerations were at play, district courts had the discretion to consider

them. See, *e.g.*, *Clark* v. *Wooster*, 119 U.S. 322, 326 (1886).[1] Looking at the entire corpus of cases from this Court and the lower courts, the culpability of a defendant's infringement was only a factor in the totality analysis, though often the determinative one.

c. By focusing on cases involving willful infringement, Zimmer largely ignores cases in which courts enhanced damages for compensatory rather than punitive purposes. See, *e.g.*, Stryker Br. 30 (collecting cases). And Zimmer wholly ignores cases in which courts enhanced damages to punish misconduct other than simply the willfulness of infringement—for instance, the defendant's subsequent efforts to conceal its infringement. See, *e.g.*, Stryker Br. 31-32.

Those purposes remain relevant today. In a small set of cases, district courts should have the discretion to enhance damages for reasons other than the willfulness of the defendant's infringement. For example, if a district court declines to grant an injunction because doing so would be against the public interest, and prospective royalties are difficult to calculate, it might enhance damages to compensate for future infringement. See *In re Seagate Tech., LLC*, 497 F.3d 1360, 1378 (Fed. Cir. 2007) (Gajarsa, J., concurring). Or a court might enhance damages in order to punish misconduct distinct from the infringement. See Pet. App. 118a-119a ("[A]lthough Zimmer did not attempt to hide the entirety of its misconduct, it did attempt to prevent Stryker from discovering certain aspects of

---

[1] Zimmer characterizes (Br. 14-15) as dicta this Court's decisions approving enhancement for reasons other than willful infringement. But *all* of the cases that Zimmer cites for a willfulness prerequisite similarly address the subject only in dicta, and some do not even address the trebling provision at all. *Id.* at 11-13.

its infringement in the run up to trial."). The fact that those cases will be rare does not mean that district courts would *per se* abuse their discretion by awarding enhancements in them.[2]

d. Because courts enhanced damages in patent infringement cases for both compensatory reasons and for punitive reasons other than willful infringement, there was no formalistic willfulness prerequisite at the time of the 1946 or 1952 Patent Act. See *N.L.R.B.* v. *Bildisco & Bildisco*, 465 U.S. 513, 525 (1984) ("Congress cannot be presumed to have adopted one standard over the other without some affirmative indication of which it preferred."). Zimmer focuses on the legislative history of the 1946 Act, but that history actually makes clear that Congress did *not* ratify a willfulness requirement. Zimmer cherry-picks (Br. 17-18) statements by two Representatives and two witnesses that enhanced damages would be available in cases of willful infringement, but none characterized it as a prerequisite. And Zimmer ignores statements by Representatives and witnesses that enhancement could serve a compensatory function in cases where ordinary damages would be inadequate. See *Recovery in Patent Infringement Suits: Hearing on H.R. 5231 Before the H. Comm. on Patents*, 79th Cong. 3 (1946) (Rep. Henry reading witness testimony into the record); *id.* at 15 (American Bar Association witness; Rep. Lanham).

e. Finally, apart from its argument that Congress ratified a willfulness prerequisite in either 1946 or 1952, Zimmer also relies (Br. 23) on the Patent and

---

[2] Enhancement, of course, is not equivalent to trebling. Trebling is the maximum, and in many cases it will be appropriate for the court to award far less.

Plant Variety Protection Remedy Clarification Act, 106 Stat. 4230 (1992), in an effort to show that a much later Congress understood Section 284 to incorporate a willfulness requirement. This Court, of course, invalidated the Act in *Florida Prepaid Postsecondary Education Expense Board* v. *College Savings Bank*, 527 U.S. 627 (1999). Even setting aside that the Act is no longer law, Zimmer argues that Congress attempted to subject States to enhanced damages on the understanding that such damages would be reserved for flagrant cases because of the willfulness requirement. Stryker agrees that, in cases where Section 284 is invoked to punish infringement, courts should award enhanced damages only if the infringement was intentional or reckless. Zimmer is the one arguing that even flagrant misconduct is not subject to enhanced damages if the infringer can concoct a post hoc defense. Congress has never expressed any support for *that* sentiment.

### B. The Federal Circuit Has Erred In Interpreting Willfulness.

The regime for enhanced damages worked well for nearly 150 years before the Federal Circuit began layering artifice on Section 284—and Zimmer does not contend otherwise. But whether there is any textual or historical basis for engrafting a willfulness requirement onto Section 284, Stryker readily acknowledges that the primary purpose of enhanced damages is to punish or deter intentional or reckless infringement. See Stryker Br. 35-36; U.S. Br. 14, 18. Limiting the application of Section 284 to classic willful infringement would capture the vast bulk of cases in which enhanced damages are warranted, including this one. The key point is that a willfulness require-

ment must reflect what courts traditionally examined: whether the infringement was intentional or reckless based on what the defendant knew or should have known at the time. See U.S. Br. 25.

Abandoning that traditional approach has harmed both patentees and the patent system as a whole. The Federal Circuit began by mistakenly lowering the bar for willfulness to a standard "akin to negligence" in *Underwater Devices, Inc.* v. *Morrison-Knudsen Co.*, 717 F.2d 1380 (1983). *Seagate*, 497 F.3d at 1371. The Federal Circuit then overcompensated by raising the bar too high in *Seagate* and its progeny. The court of appeals has adopted a test for willfulness that excludes intentional infringement, deems post hoc defenses sufficient to bar enhanced damages, and reserves for itself de novo review of the reasonableness of those defenses. The net result is that the Federal Circuit currently allows most highly culpable infringers to evade enhanced damages.

*Seagate*'s divergence from the traditional approach is starkest with respect to the worst type of infringement: deliberate copying of a known patent with no reason to believe that the patent is invalid. That is precisely this case, according to the jury and the district court. See Pet. App. 51a, 78a-79a. Such conduct was universally deemed worthy of enhanced damages in the pre-Federal Circuit era, as even Zimmer acknowledges (Br. 22)—and yet the Federal Circuit nevertheless held here that Zimmer is not even eligible for an enhancement. That outcome cannot be justified as a matter of congressional ratification, this Court's decision in *Safeco*, or public policy.

### 1. The Federal Circuit's Current Approach Was Not Ratified In The America Invents Act.

The Federal Circuit decided *Seagate* in 2007, and thus Zimmer's arguments for ratification depend entirely on the America Invents Act (AIA), which was enacted in 2011. But the AIA does not codify the *Seagate* test for willfulness or even a willfulness prerequisite at all. In fact, Congress expressly considered both options and declined to adopt either. See Patent Reform Act of 2011, S. 23, 112th Cong. at 35-36 (2011) (reported); see also *Russello* v. *United States*, 464 U.S. 16, 23-24 (1983) ("Where Congress includes limiting language in an earlier version of a bill but deletes it prior to enactment, it may be presumed that the limitation was not intended."). Zimmer is thus left to draw indirect inferences from two sources: a provision of the Act addressing opinions of counsel, 35 U.S.C. 298, and the Act's general legislative history. Neither source supports the claim that Congress implicitly approved the *Seagate* test in the AIA.

a. Section 298 provides that a defendant's failure to obtain an opinion of counsel, or to present such an opinion to the fact-finder, may not be used to demonstrate "willfulness." But as Pulse candidly acknowledges (Br. 25), willfulness has a role to play on either side's approach, whether it is a factor in the totality analysis or a strict prerequisite. Section 298 simply says that, to the extent a jury or the court is determining willfulness, it should not consider the defendant's failure to obtain or produce a legal opinion. Section 298 does not signal that courts should treat willfulness as a prerequisite, let alone that they should do so using *Seagate*'s two-step test for willfulness.

b. Zimmer thus devotes the bulk of its argument (Br. 26-29) to the AIA's legislative history. At the time of that debate, there was no well-established regime for Congress to ratify. *Seagate* was decided after hearings on patent reform had already begun; it overturned nearly a quarter-century of Federal Circuit precedent since *Underwater Devices*; and it expressly left "it to future cases to further develop the application" of the new standard. 497 F.3d at 1371. Cases following *Seagate* accepted that invitation and further restricted the standard by treating post hoc defenses as dispositive, see, *e.g.*, *Halo Elecs., Inc.* v. *Pulse Elecs., Inc.*, 769 F.3d 1371, 1382 (Fed. Cir. 2014), and establishing a de novo standard of review for objective recklessness, see *Bard Peripheral Vascular, Inc.* v. *W.L. Gore & Assocs.*, 682 F.3d 1003, 1005, 1008 (Fed. Cir. 2012). Neither Zimmer nor its congressional amici even attempt to argue that those aspects of the Federal Circuit's current framework have been ratified by Congress. Nor do they point to any case in which this Court has found ratification in such a rapidly evolving and unsettled area of law.

Moreover, the legislative record does not even demonstrate that Congress intended to ratify the then-existing regime. The portions of the record on which Zimmer and its amici rely show only one thing: some Members of Congress believed that *Underwater Devices* had erred by imposing an affirmative duty of care on patent owners to avoid infringement, and they were glad that *Seagate* had discarded what was essentially a negligence standard for enhanced damages.[3]

---

[3] See Zimmer Br. 27-29 (citing, *e.g.*, H.R. Rep. No. 112-98, pt. 1, at 39 (2011); 157 Cong. Rec. 2857, 2859, 3401 (2011); *Review of Recent Judicial Decisions on Patent Law: Hearing Before H. Sub-*

Stryker could not agree more: *Underwater Devices* was just as inconsistent with the history of Section 284 as *Seagate*. What the legislative record does not show, however, is any affirmative intent to ratify *Seagate*'s three-stage approach to enhancement (*i.e.*, objective recklessness, subjective bad faith, discretionary weighing). The six congressional amici claim (Br. 12) they intended to leave that specific three-step approach in place, even if they removed language to that effect from the actual bill and never said as much on the floor of Congress—but if post-enactment legislative history is not a legitimate guide to interpretation, see *Bruesewitz* v. *Wyeth LLC*, 562 U.S. 223, 242 (2011), surely post-enactment vouching is even worse.

Looking to the portions of the record that Zimmer and its amici do not discuss, all sides agreed—in the years leading up to the AIA and in the debate over the AIA itself—that enhanced damages should be available to punish and deter infringers who acted intentionally or recklessly based on what they knew (or should have known) about others' patents at the time.[4] As Senator Kyl put it in a statement eerily descriptive of the facts here,

> It is not uncommon that a manufacturer will find itself in a situation where it feels great pressure to copy a competitor's pa-

---

*comm. on Intellectual Prop., Competition, & the Internet*, 112th Cong. 14, 31-32, 48, 57 (2011)).

[4] See, *e.g.*, Patent Reform Act of 2007, H.R. 1908, 110th Cong. at 29-31 (2007) (passed by House) (targeting deliberate copying); S. Rep. No. 111-18, at 53, 59 (minority views of Sens. Kyl, Feingold, and Coburn) (willfulness is present where defendant knew of patent, had no reason to believe it was invalid, and knew its own product was infringing).

> tented invention. * * * It can choose to continue to try to reproduce or substitute for the patented feature, and as it does so, continue to lose market share * * * . Or it can choose to infringe the competitor's patent. Treble damages are authorized in order to deter manufacturers from choosing the second option.

157 Cong. Rec. S1374 (daily ed. Mar. 8, 2011). Zimmer does not point to a single Member of Congress who argued for objective recklessness as the Federal Circuit currently understands and applies that requirement.

### 2. The Federal Circuit's Current Approach Is Not Drawn From *Safeco*.

Zimmer also argues (Br. 37-40) that the Federal Circuit's current approach flows from this Court's decision in *Safeco Ins. Co.* v. *Burr*, 551 U.S. 47 (2007). Because willfulness is a context-dependent term, the Federal Circuit should not have looked beyond its traditional meaning in the patent law. See Stryker Br. 45-46. Regardless, even under *Safeco*, there is no justification for immunizing intentional or reckless infringers simply because they develop an after-the-fact defense that the Federal Circuit, reviewing de novo, deems nonfrivolous. The Federal Circuit has made two crucial errors in interpreting *Safeco*. Correcting either mistake would allow enhancements in cases like this one that historically were at Section 284's very core.

a. First, the Federal Circuit has excised intent from the enhancement analysis, thereby limiting will-

fulness to recklessness alone.[5] Intent—which even Pulse concedes (Br. 37) represents an independent ground for finding willfulness—covers circumstances in which a wrongdoer either "desires to cause [the] consequences of his act" (purpose) or "believes that the consequences are substantially certain to result from it" (knowledge). 2 Restatement (Second) of Torts § 8A (1965) (Restatement). When a defendant deliberately copies a patented invention without any ground for believing the patent to be invalid, it has intentionally infringed. In such circumstances, there is no reason to ask whether the infringement might have been objectively reasonable (though still unlawful) under a legal theory that the defendant's counsel later developed at trial.

Pulse argues that an infringer cannot know its conduct is unlawful if there is an objectively reasonable defense—albeit one of which the infringer is not aware. But classic tort law uses belief interchangeably with knowledge, see Restatement § 8A & cmt. b; *Black's Law Dictionary* 888 (8th ed. 2004), and clearly a defendant may believe it is infringing even if it later discovers a non-sham defense. Moreover, *Safeco* itself recognizes that knowledge is not merely a subset of recklessness. 551 U.S. at 60 ("[A]ction falling within the knowing subcategory [of willfulness] does not simultaneously fall within the reckless alternative.").

---

[5] Zimmer contends (Br. 38-39) that Stryker waived this argument by not raising it at trial. But in presenting arguments to the jury, Stryker obviously was bound by *Seagate*. As the district court recognized, Stryker nevertheless presented substantial evidence of intentional infringement. See Pet. App. 74a-75a, 78a-79a, 110a, 117a-119a.

Second, with respect to the recklessness aspect of willfulness, the Federal Circuit improperly measures the recklessness of a defendant's infringement based on the defenses proffered at trial or on appeal, not based on the facts available to the defendant at the time of its infringement. Looking to the defendant's knowledge at the time of its infringement does not convert recklessness into a subjective inquiry: the question remains how an objectively reasonable person would have acted in the face of such knowledge. See U.S. Br. 28-30; Jason A. Rantanen, *An Objective View of Fault in Patent Infringement*, 60 Am. U. L. Rev. 1575, 1588 (2011) ("[I]n the tort context, recklessness is an objective inquiry, but actor-centric, in that it is based on the facts that were available to the actor at the time.").[6]

b. Nothing in *Safeco* prevents the Court from correcting either of those mistakes. In *Safeco*, the parties offered two different interpretations of the relevant provision of the Fair Credit Reporting Act (FCRA). Although Safeco's reading was wrong, its reading "was not objectively unreasonable." 551 U.S. at 70. In a footnote, the Court observed that a defendant cannot be found willful for "follow[ing] an interpretation that could reasonably have found support in the courts, whatever [its] subjective intent may

---

[6] Pulse agrees that "honest doubt" as to patent validity or infringement historically precluded a finding of willfulness. Br. 17, 39; see Stryker Br. 39 n.6. The phrase "honest doubt" itself speaks to a defendant's contemporaneous state of mind, and Pulse's cases confirm that the inquiry hinges on the facts known to the infringer at the time. See, *e.g.*, *Guyon* v. *Serrell*, 1 Blatchf. 244, 246 (C.C.S.D.N.Y. 1847); *Enter. Mfg. Co.* v. *Shakespeare Co.*, 141 F.2d 916, 921 (6th Cir. 1944); *Wilden Pump & Eng'g Co.* v. *Pressed & Welded Products Co.*, 655 F.2d 984, 990 (9th Cir. 1981).

have been." *Id.* at 70 n.20. Contrary to Zimmer's argument (Br. 39-40), the Court's observation does not mean that bad faith is irrelevant whenever a defendant later advances a reasonable position in litigation. The Court's discussion of the relevant facts repeatedly noted that Safeco had contemporaneously relied on its objectively reasonable interpretation. See, *e.g.*, *id.* at 68 ("Safeco did not give Burr and Massey any notice *because it thought* [the FCRA] did not apply to initial applications.") (emphasis added). The Court's reasoning in *Safeco* depended on the fact that the defendant had adopted the reasonable interpretation at the time of its alleged misconduct.

c. Petitioners' approach to willfulness is also consistent with this Court's earlier cases on willfulness in tort law more generally. In *United States* v. *Illinois Central Railroad Co.*, 303 U.S. 239 (1938), for example, the Court held that a defendant acts willfully when it "either intentionally disregards the statute or is plainly indifferent to its requirements." *Id.* at 243 (internal quotation marks omitted). Similarly in *United States* v. *Murdock*, 290 U.S. 389 (1933), the Court stated that willfulness is "employed to characterize a thing done without ground for believing it is lawful, or conduct marked by careless disregard whether or not one has the right so to act." *Id.* at 394-395 (internal citations omitted). It only makes sense to speak of "disregard[ing]" a risk or acting "without ground for believing [one's conduct] is lawful" if a defendant's intent or recklessness is assessed based on the facts available to the defendant at the time. Moreover, "evil motive," "wrongful purpose or intent," and "reckless indifference to the rights of others" are all well-established grounds for awarding punitive damages. 4 Restatement § 908(1) & cmt. b

(1979); *Smith* v. *Wade*, 461 U.S. 30, 51 (1983). The common law of punitive damages thus also focuses on a defendant's then-existing state of mind—not the defenses presented in litigation.

d. It is telling that so many of respondents' amici acknowledge that the conduct at issue in this case—deliberate copying, without any reasonable, contemporaneous belief of invalidity or noninfringement—must be eligible for enhanced damages. See, *e.g.*, Huawei Br. 20; Intel Br. 5; Internet Cos. Br. 18; Marvell Br. 9; Yahoo Br. 31. None of them offers any principled way to square that concession with the *Seagate* framework, nor could they. Once one correctly recognizes that the culpability of infringement is tied to what the infringer knew or should have known at the time, there is no reason to let after-the-fact defenses bar enhanced damages.[7]

### 3. The Federal Circuit's Current Approach Is Poor Policy.

Finally, Zimmer argues (Br. 45-51) that *Seagate* is good policy because it encourages challenges to questionable patents and helps businesses. Setting aside that policy considerations cannot trump clear statutory text, see *Cent. Bank of Denver, N.A.* v. *First Inter-*

---

[7] Respondents wrongly contend that Stryker's approach would mark a return to *Underwater Devices*. The defendant, however, would not bear an affirmative duty of any kind. The burden would remain on the patentee to demonstrate its entitlement to enhanced damages, and the absence of a legal opinion could not be used to prove willfulness. 35 U.S.C. 298. As in many other contexts, the defendant could elect to use a legal opinion as a shield, but allowing defendants to introduce such evidence does not somehow shift the burden.

*state Bank of Denver, N.A.*, 511 U.S. 164, 188 (1994), Zimmer's policy arguments are misguided.

a. Although Zimmer contends that Section 284 serves only punitive purposes, it studiously ignores the role that provision plays in punishing and deterring culpable infringement. Zimmer does not dispute that other remedies generally do nothing more than restore patentees to their pre-infringement positions. As a result, firms can steal patented designs knowing that the cost of liability, discounted by the likelihood of detection, is lower than their potential profits. The prevalence of such infringement imposes enormous monitoring and deterrence costs on patentees. Zimmer's only response is that because copying and other forms of culpable conduct are supposedly rare, the fact that they may escape punishment is a "solution[] in search of a problem." Br. 51 (internal quotation marks omitted).

The premise of Zimmer's argument is questionable at best. Here, the jury and district court found that Zimmer acted in bad faith by deliberately copying Stryker's patented products (and Zimmer did not appeal that adverse finding on *Seagate*'s subjective prong). See Pet. App. 51a-52a.[8] In several other re-

---

[8] Zimmer plays loose with the facts (Br. 3) by characterizing Stryker's patents as mere modifications on existing designs in a crowded field. Zimmer's business plan praised Stryker as a "[m]arket innovator[]" and conceded that Stryker's SurgiLav was "the first battery operated system on the market." J.A. 295-296. Zimmer misleadingly suggests (Br. 3) that it did not know of Stryker's patents until after its own products were released. Zimmer directly copied Stryker's patented products while the patents-in-suit were pending, see Pet. App. 117a; J.A. 37, 111, 193, and then made no modification when Stryker's patents-in-suit issued, despite being aware of them. See Docket Entry No. 406-2, at 4 (Mar. 22, 2013); Docket Entry No. 358, at 475:14-476:24 (Jan. 20, 2013). Even

cent cases, the Federal Circuit also has set aside enhanced damages awards against highly culpable infringers. See Stryker Br. 48. And of course district courts often decline to impose such enhancements in the first place because of *Seagate*. See, *e.g.*, *Minemyer* v. *R-Boc Representatives, Inc.*, 2012 WL 2155240, at *14 (N.D. Ill. June 13, 2012) ("[G]iven the defendants' credible non-infringement defenses, * * * the jury's finding [of willfulness] cannot stand under *Seagate* and its progeny. And sadly so given the defendants' egregious and clandestine copying.").[9]

Whatever the frequency of flagrant misconduct, punishing and deterring it is the very purpose of Section 284. The main practical difference between Stryker's and Zimmer's approaches is in those cases where the defendant engages in highly culpable infringement but nevertheless puts forth a nonfrivolous post hoc defense. In Stryker's view, those infringers should be eligible for enhanced damages at the discretion of district courts. Whether an infringer devises a

---

six months after the jury verdict and over eight months after the district court's summary judgment as to infringement, Zimmer still had not changed its infringing product design. See Pet. App. 52a, 76a, 118a.

[9] Contrary to Zimmer's argument (Br. 42), "it does not take much" to satisfy *Seagate*'s objective recklessness prong. *Minemyer*, 2012 WL 2155240, at *11. A defendant only has to show that its defenses are not "objectively baseless," *iLOR, LLC*, 631 F.3d at 1377 (internal quotation marks omitted), or a "sham," *Halo* Pet. App. 64a. Because the presumption of validity plays no role in the inquiry, virtually any obviousness defense satisfies this threshold. The test is so easy to satisfy that in some cases defenses too implausible even to place before the jury are treated as sufficient to preclude a finding of willfulness. See *Carnegie Mellon Univ.* v. *Marvell Tech. Grp., Ltd.*, 807 F.3d 1283, 1302 (Fed. Cir. 2015).

plausible defense after committing the infringement has nothing to do with culpability. The Federal Circuit's current approach immunizes a large and arbitrary subset of the most culpable infringers, thus systematically underdeterring the worst forms of infringement.

b. Zimmer alarmingly predicts (Br. 48-51) that altering *Seagate* would lead to a flood of unwarranted damages enhancements. But the only data for that view are drawn from the years immediately preceding *Seagate*, when all parties agree that *Underwater Devices* had set too permissive a standard for enhanced damages. See Intel Br. 18. Neither respondents nor their amici point to any evidence that the traditional approach to enhanced damages was too lax. Respondents repeatedly refer to a "balance" between protecting property rights and promoting innovation, see, *e.g.*, Pulse Br. 44-45, but making enhanced damages virtually impossible to obtain is no balance at all. Stryker explained at length in its opening brief (at 37-42) why honest but accidental infringers historically were not, and should not be, subject to enhanced damages—to which respondents say not a word.[10]

c. Zimmer's more specific policy concerns likewise lack merit. For example, Zimmer argues (Br. 45-46) that *Seagate* is necessary to preserve the incentive to challenge weak patents. Under the traditional approach, however, a defendant who made an

---

[10] Zimmer trumpets (Br. 40) the fact that the current regime often allows resolution of the willfulness issue at summary judgment. But it does so only by ignoring the statutory text and the relevant facts at the time of the infringement. It is hardly a virtue of the existing framework that even bad-faith copiers like Zimmer may be able to escape enhancement early in litigation.

informed decision to challenge a contestable patent was not subject to enhanced damages, absent some other misconduct (like subsequent concealment of the alleged infringement). Moreover, there are numerous steps a defendant can take to challenge patents without exposing itself to the threat of enhanced damages: petitioning for *inter partes* review, 35 U.S.C. 311-319; moving for reexamination, 35 U.S.C. 302; or requesting a declaratory judgment of invalidity, 28 U.S.C. 2201.

Zimmer inconsistently contends (Br. 47-48, 50) that altering *Seagate* would both force businesses to conduct costly investigations of potential infringement and discourage them from reading patents. Courts, however, can and should take into account the degree of notice that a defendant had of the infringed patent in assessing a defendant's response. See Stryker Br. 41. Defendants should not be subject to enhanced damages based solely on vague form letters from nonpracticing entities, see Pulse Br. 46-47, or for independently developing products and inadvertently overlooking infringed patents, see EMC Br. 16-17. Those types of infringement may be negligent and subject to ordinary damages, but they are not the sort of heightened misconduct that should render defendants eligible for enhancements.

In a last-ditch effort, Zimmer argues (Br. 49-50) that *Seagate* is necessary to prevent forum-shopping. That should be less of a concern given that, after *Seagate*, the Federal Circuit made it significantly easier to transfer venue. See *In re TS Tech USA Corp.*, 551 F.3d 1315, 1318 (2008). In any event, any statute that places discretion in the hands of district courts, whether with respect to fees under Section 285 or enhanced damages under Section 284, allows for some

variance in application. But the solution is not to preserve a convoluted, three-stage approach that lacks any basis in Section 284's text or history. Rather, this Court should allow district courts to resume considering the factors that historically guided their case-by-case exercise of discretion, prevented significant variance in outcomes, and achieved an actual balance between innovation and property rights.

### C. The Federal Circuit Has Erred In Its Burden Of Proof And Standard Of Review.

The applicable evidentiary burden and appellate standard of review are presented here, and, as it did in *Octane* and *Highmark*, the Court should provide guidance to lower courts by deciding them.

1. The Federal Circuit plucked the clear-and-convincing standard out of thin air in *Shatterproof Glass Corp.* v. *Libbey-Owens Ford Co.*, 758 F.2d 613, 628 (1985). In so doing, it did not address the fact that the preponderance standard typically governs in civil cases—including those involving "severe civil sanctions" such as antitrust trebling. *Herman & MacLean* v. *Huddleston*, 459 U.S. 375, 389-390 (1983); see *Octane*, 134 S. Ct. at 1758. Zimmer contends (Br. 52) that the clear-and-convincing standard is not at issue because that standard applies only to factual questions, and the objective-recklessness prong of *Seagate* is a legal question. To be sure, the Federal Circuit's use of a factual evidentiary burden (clear and convincing evidence) to evaluate what it treats as a legal question (objective recklessness) is a reason why its current approach is incoherent. But the Federal Circuit plainly uses the clear-and-convincing standard to evaluate objective recklessness, as it did in this case. See Pet. App. 21a.

2. Zimmer also contends (Br. 51-52) that the Federal Circuit's de novo standard of review for objective recklessness is not at issue, because the panel here stated that the district court's determination of willfulness would be reversible under any standard. See Pet. App. 22a n.6. But the panel's statement is belied by its analysis. According to the panel, the district court had failed to undertake *any* assessment of objective recklessness. *Id.* at 22a. The district court, however, spent several pages of its opinion addressing that precise issue. See *id.* at 76a-78a. The Federal Circuit ignored the district court's evaluation of willfulness as well as its underlying fact findings, and even relied on willfulness defenses that Zimmer had not raised in the trial court. This Court could reverse on that basis alone. See *Wilson* v. *Seiter*, 501 U.S. 294, 305 (1991) (reversing and remanding despite lower court's claim that it would have reached the same result even under the correct standard). Enhancement decisions were long reviewed under a unitary abuse-of-discretion standard, and it should be so once again.[11]

[11] Even if the Federal Circuit were correct that recklessness includes an objective prong that can be satisfied by post hoc defenses, de novo review still would be inappropriate. See *Bard Peripheral Vascular, Inc.* v. *W.L. Gore & Assocs., Inc.*, 776 F.3d 837, 848 (Fed. Cir. 2015) (Hughes, J., concurring).

## CONCLUSION

For the foregoing reasons and those stated in the opening brief, the relevant portions of the judgment of the court of appeals should be reversed or at a minimum vacated and remanded.

Respectfully submitted.

SHARON A. HWANG
DEBORAH A. LAUGHTON
STEPHANIE F. SAMZ
MCANDREWS HELD & MALLOY LTD.
500 West Madison Street
Suite 3400
Chicago, IL 60661
(312) 775-8000

GARRARD R. BEENEY
ROBERT J. GIUFFRA, JR.
SULLIVAN & CROMWELL LLP
125 Broad Street
New York, NY 10004
(212) 558-4000

JEFFREY B. WALL
*Counsel of Record*
AUSTIN L. RAYNOR
SULLIVAN & CROMWELL LLP
1700 New York Avenue, N.W.
Suite 700
Washington, DC 20006
(202) 956-7500
wallj@sullcrom.com

FEBRUARY 12, 2016